Comparative EIS Kinetics Report

Model Structure: `R0-p(R1-p(R2-p(R3,CPE3),CPE2),CPE1)`
Used data: original data

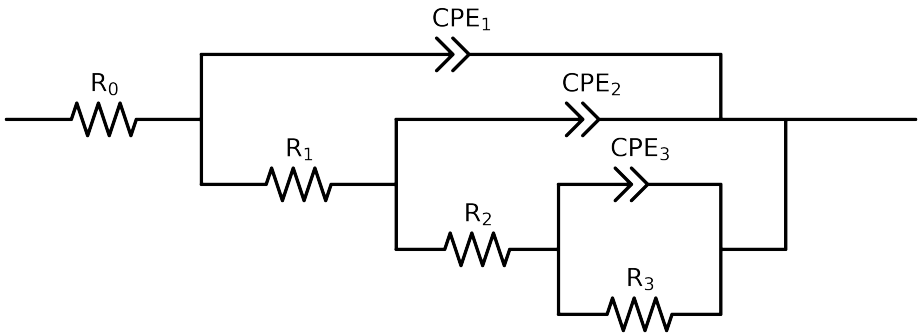

Element	Unit	Bounds	Cauvel_1_Lcystine_8H	Cauvel_1_Lcystine_24H	Cauvel_1_Lcystine_48H	Cauvel_1_Lcystine_72H	Cauvel_1_Lcystine_168H
R_0	Ω	$[1.0e-03, 1.0e+03]$	$7.76e+01 \pm 4.3e-01$	$7.55e+01 \pm 3.6e-01$	$8.03e+01 \pm 3.0e-01$	$8.55e-02 \pm 2.0e+02$	$8.37e+01 \pm 4.9e-01$
R_1	Ω	$[1.0e+00, 1.0e+08]$	$2.17e+05 \pm 1.2e+04$	$7.29e+01 \pm 5.9e+01$	$2.43e+05 \pm 1.0e+04$	$7.92e+01 \pm 2.0e+02$	$1.04e+05 \pm 3.0e+04$
R_2	Ω	$[1.0e+00, 1.0e+08]$	$1.00e+08 \pm 2.8e-05$	$3.13e+05 \pm 3.9e+03$	$1.00e+08 \pm 4.8e-02$	$3.08e+05 \pm 6.8e+03$	$2.67e+05 \pm 1.4e+04$
R_3	Ω	$[1.0e+00, 1.0e+08]$	$1.00e+08 \pm 5.2e-05$	$5.67e+07 \pm 1.0e-03$	$1.00e+08 \pm 5.3e-02$	$1.51e+06 \pm 4.5e+00$	$4.39e+02 \pm 1.4e+04$
Q_3	Ω^{-1} sec^a	$[1.0e-11, 1.0e-03]$	$1.00e-11 \pm 3.5e-02$	$2.32e-04 \pm 3.6e-05$	$1.00e-11 \pm 9.5e-03$	$2.50e-04 \pm 5.4e-05$	$1.09e-10 \pm 1.4e+00$
n_3	-	$[5.0e-01, 1.0e+00]$	$1.00e+00 \pm 4.8e-01$	$1.00e+00 \pm 5.8e-02$	$1.00e+00 \pm 5.2e+05$	$1.00e+00 \pm 7.4e-02$	$8.16e-01 \pm 8.9e-08$
Q_2	Ω^{-1} sec^a	$[1.0e-11, 1.0e-03]$	$7.07e-04 \pm 8.5e-03$	$3.22e-06 \pm 3.5e-06$	$4.04e-04 \pm 2.4e-03$	$9.84e-06 \pm 2.2e-07$	$1.64e-06 \pm 3.5e-06$
n_2	-	$[5.0e-01, 1.0e+00]$	$1.00e+00 \pm 2.0e-01$	$8.61e-01 \pm 8.0e-02$	$1.00e+00 \pm 9.1e-02$	$8.43e-01 \pm 2.4e-03$	$1.00e+00 \pm 3.9e-01$
Q_1	Ω^{-1} sec^a	$[1.0e-11, 1.0e-03]$	$9.41e-06 \pm 9.9e-08$	$6.65e-06 \pm 3.5e-06$	$1.01e-05 \pm 7.1e-08$	$7.12e-08 \pm 2.8e-07$	$9.04e-06 \pm 2.0e-07$
n_1	-	$[5.0e-01, 1.0e+00]$	$8.82e-01 \pm 2.0e-03$	$8.69e-01 \pm 4.2e-02$	$8.50e-01 \pm 1.3e-03$	$6.37e-01 \pm 2.9e-01$	$8.45e-01 \pm 3.3e-03$
χ^2	-	-	$6.203e-04$	$1.947e-04$	$2.654e-04$	$1.871e-04$	$5.823e-04$

Analysis Results: 8H

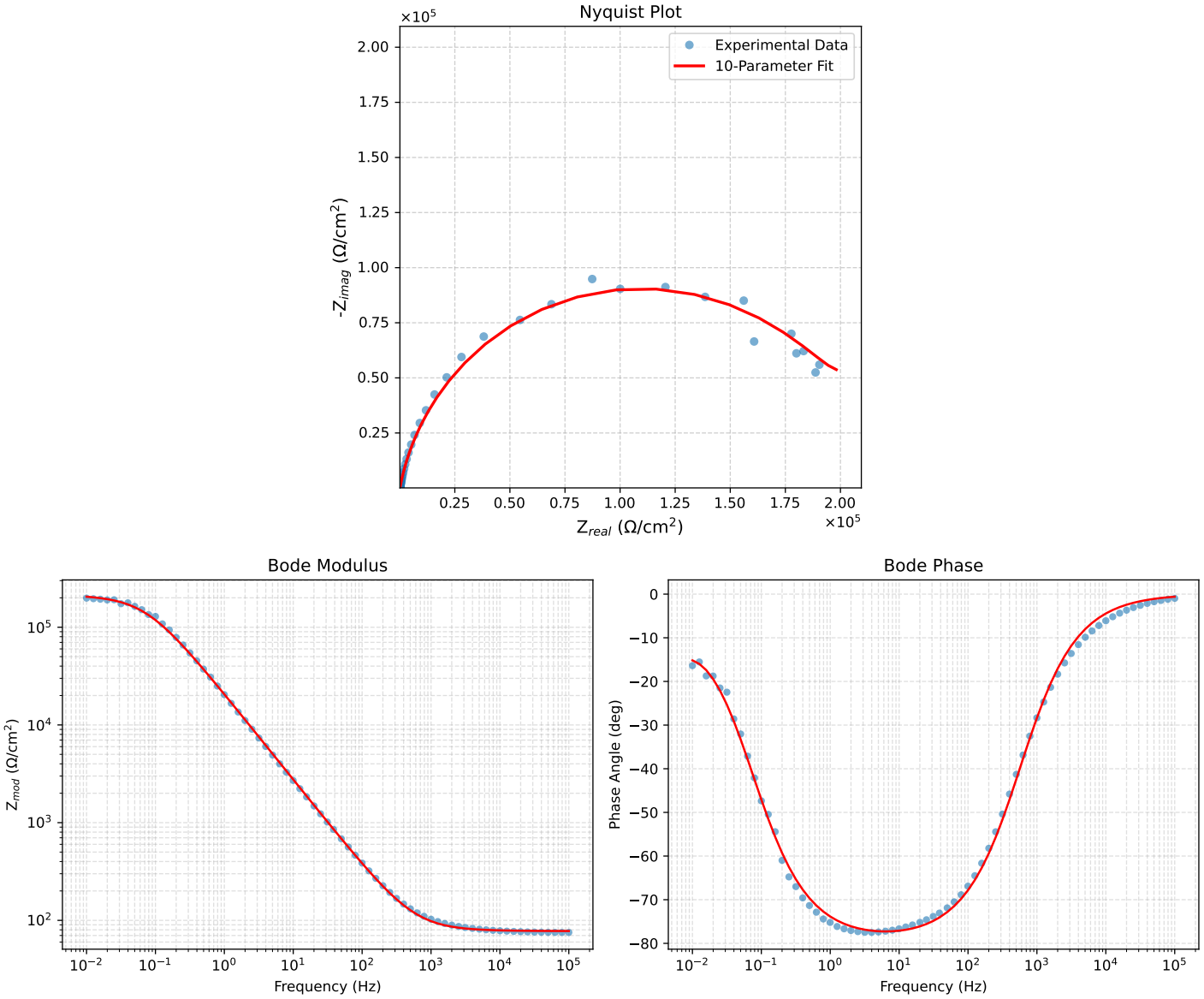

Figure 1: EIS Fit Results for Cauvel_1_Lcystine_8H

Analysis Results: 24H

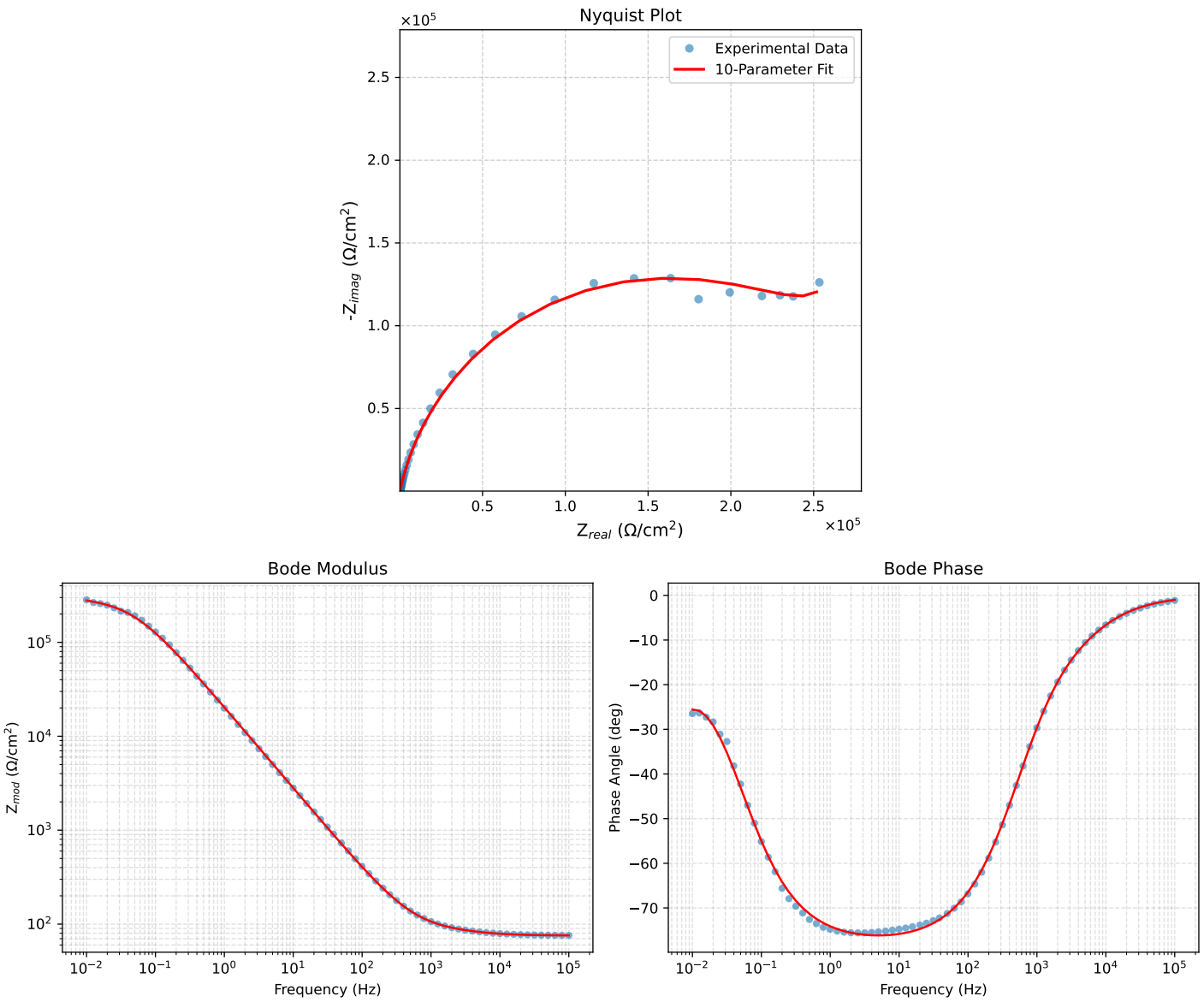

Figure 2: EIS Fit Results for Cauvel_1_Lcystine_24H

Analysis Results: 48H

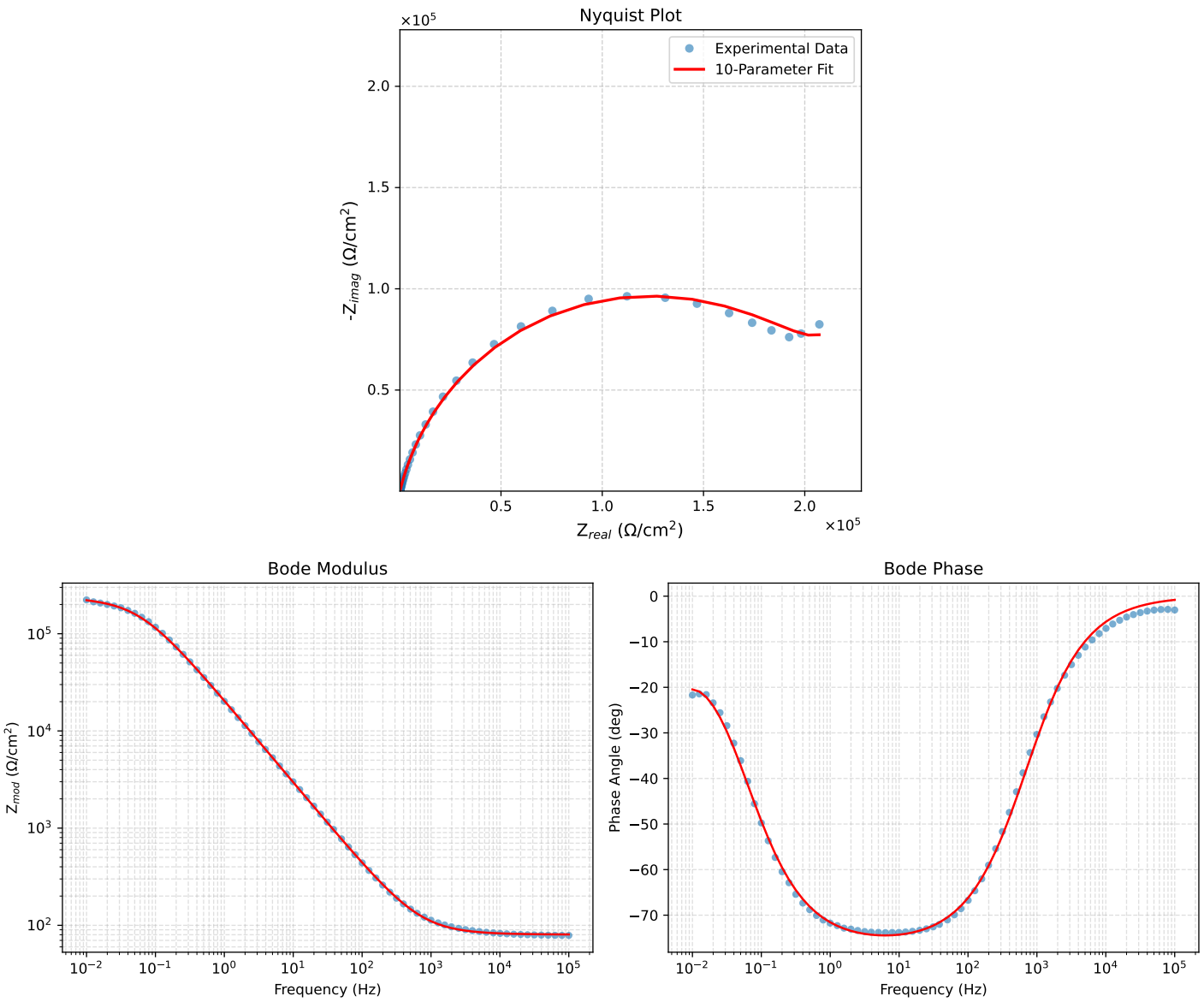

Figure 3: EIS Fit Results for Cauvel_1_Lcystine_48H

Analysis Results: 72H

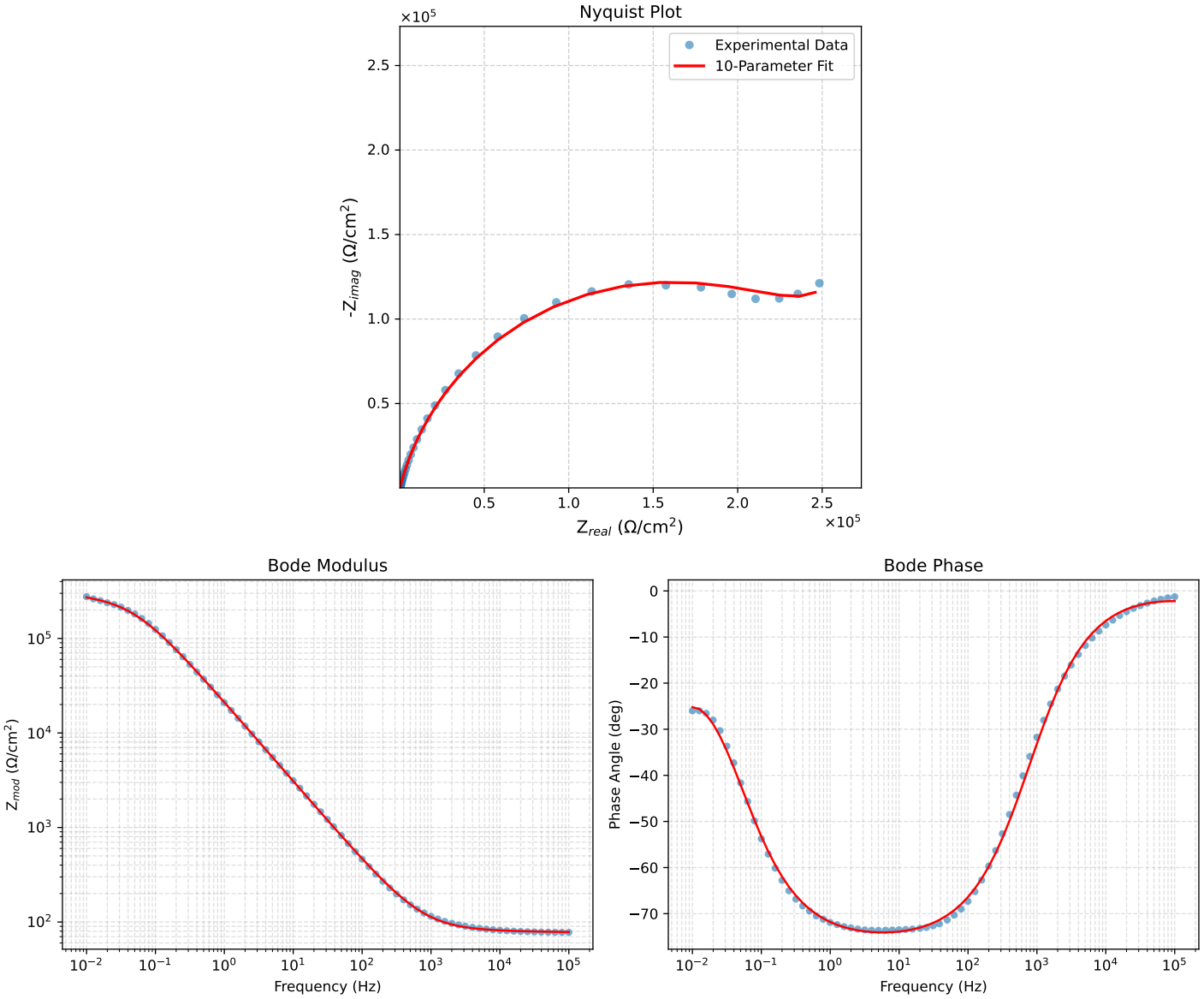

Figure 4: EIS Fit Results for Cauvel_1_Lcystine_72H

Analysis Results: 168H

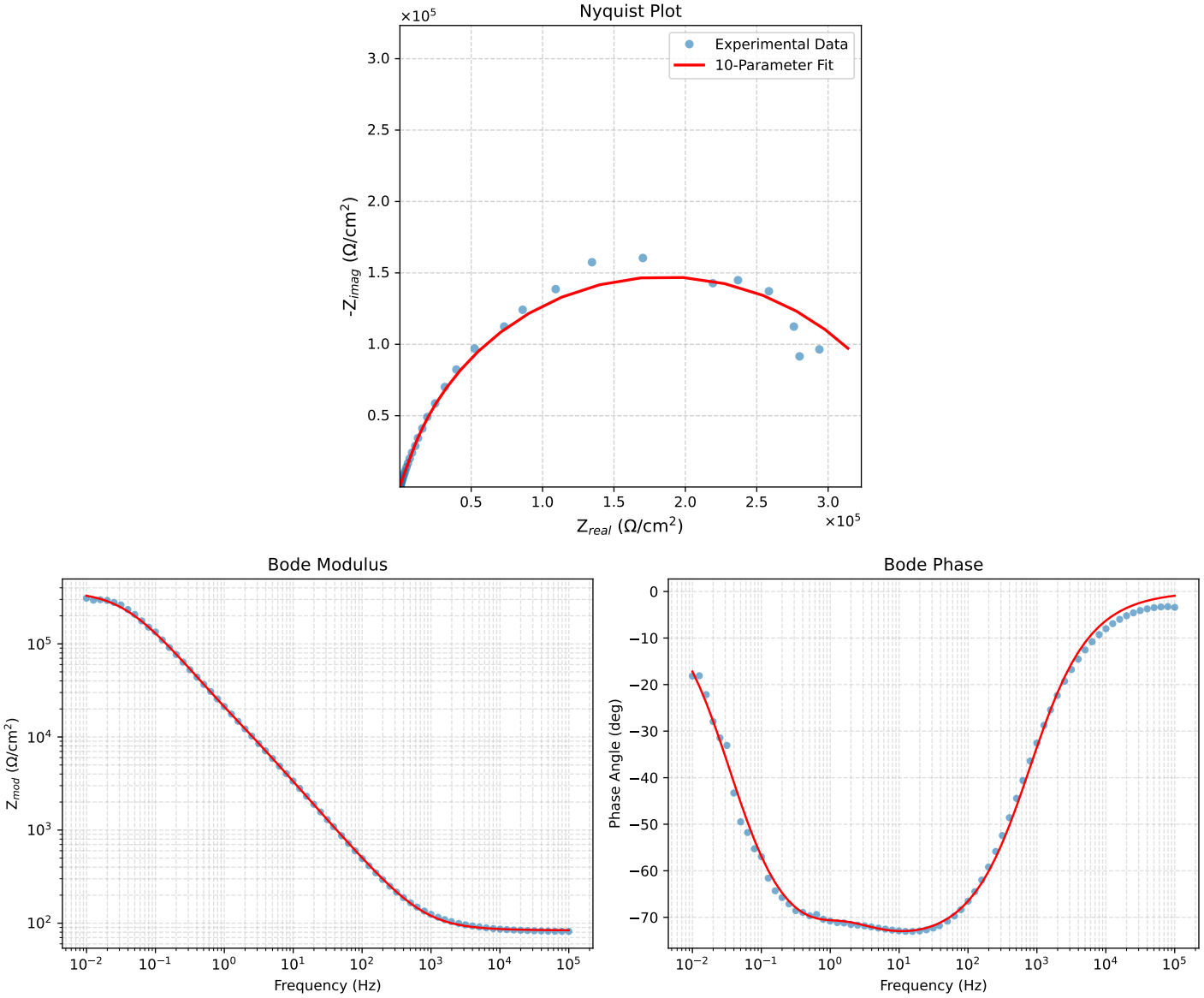

Figure 5: EIS Fit Results for Cauvel_1_Lcystine_168H