Comparative EIS Kinetics Report

Model Structure: `R0-p(R1-p(R2,CPE2),CPE1)`
Used data: original data

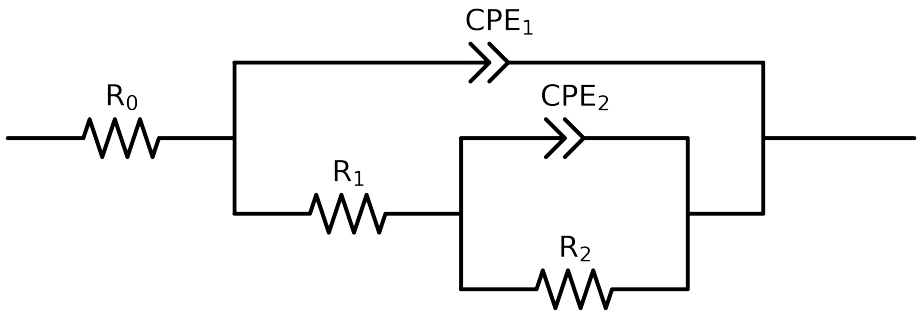

Element	Unit	Bounds	Cauvel_3_Mo_1H	Cauvel_3_Mo_4H	Cauvel_3_Mo_8H
R_0	Ω	$[1.0e-03, 1.0e+03]$	$5.56e+01 \pm 4.3e-01$	$3.82e+01 \pm 5.1e+00$	$5.48e+01 \pm 3.7e-01$
R_1	Ω	$[1.0e+00, 1.0e+08]$	$6.87e+03 \pm 2.2e+02$	$2.23e+01 \pm 4.7e+00$	$4.85e+03 \pm 3.5e+02$
R_2	Ω	$[1.0e+00, 1.0e+12]$	$1.01e+04 \pm 8.2e+02$	$1.25e+04 \pm 6.8e+02$	$2.44e+04 \pm 3.2e+03$
Q_2	Ω^{-1} sec^a	$[1.0e-11, 1.0e-03]$	$2.65e-04 \pm 1.8e-05$	$3.14e-05 \pm 5.5e-06$	$2.89e-04 \pm 2.4e-05$
n_2	-	$[5.0e-01, 1.0e+00]$	$1.00e+00 \pm 4.6e-02$	$9.66e-01 \pm 2.3e-02$	$6.69e-01 \pm 4.3e-02$
Q_1	Ω^{-1} sec^a	$[1.0e-11, 1.0e-03]$	$3.38e-05 \pm 8.7e-07$	$7.57e-05 \pm 4.8e-06$	$7.15e-05 \pm 2.1e-06$
n_1	-	$[5.0e-01, 1.0e+00]$	$8.85e-01 \pm 4.9e-03$	$5.00e-01 \pm 5.0e-02$	$8.87e-01 \pm 6.0e-03$
χ^2	-	-	$1.465e-03$	$2.686e-03$	$1.233e-03$

Analysis Results: 1H

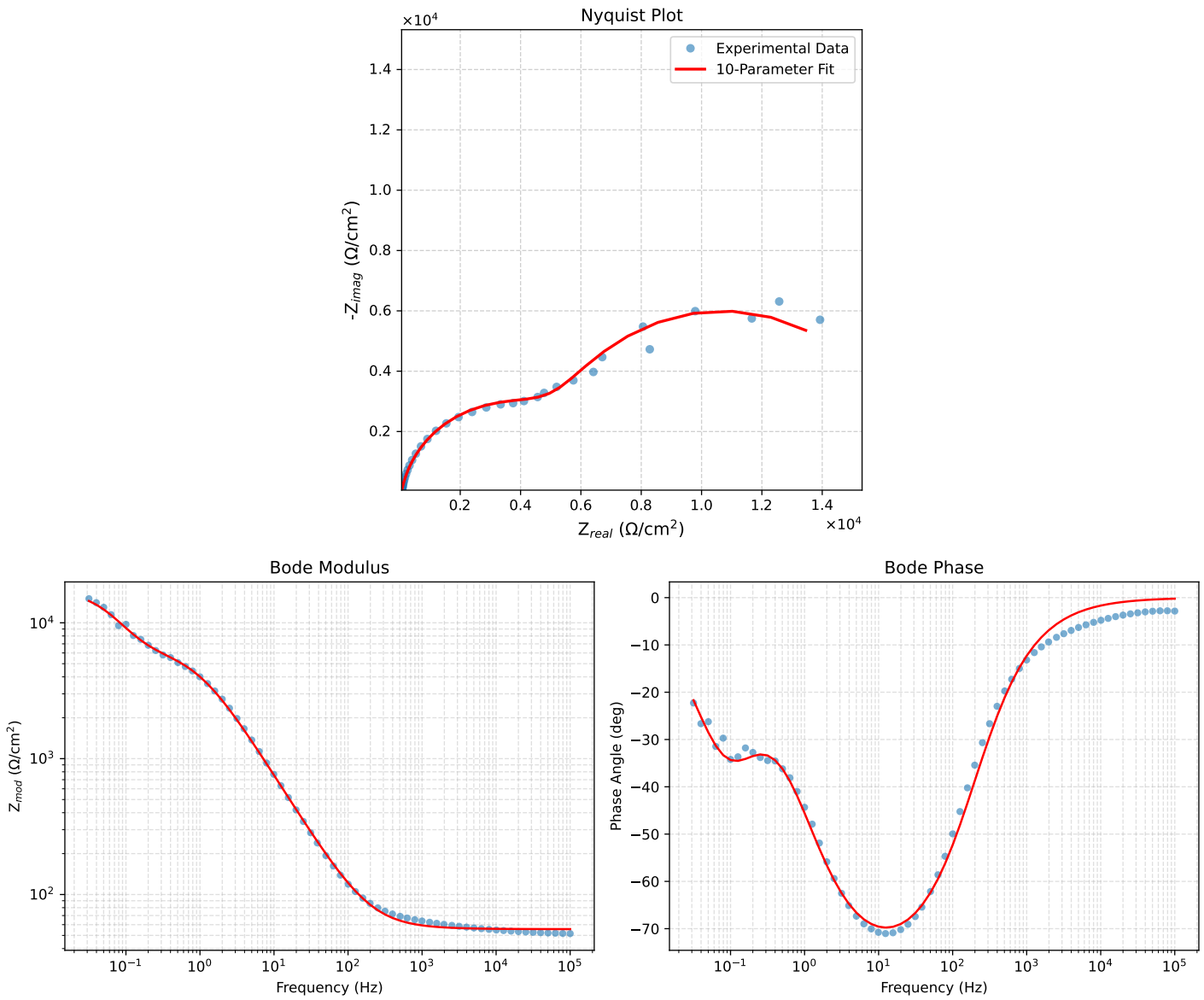

Figure 1: EIS Fit Results for Cauvel_3_Mo_1H

Analysis Results: 4H

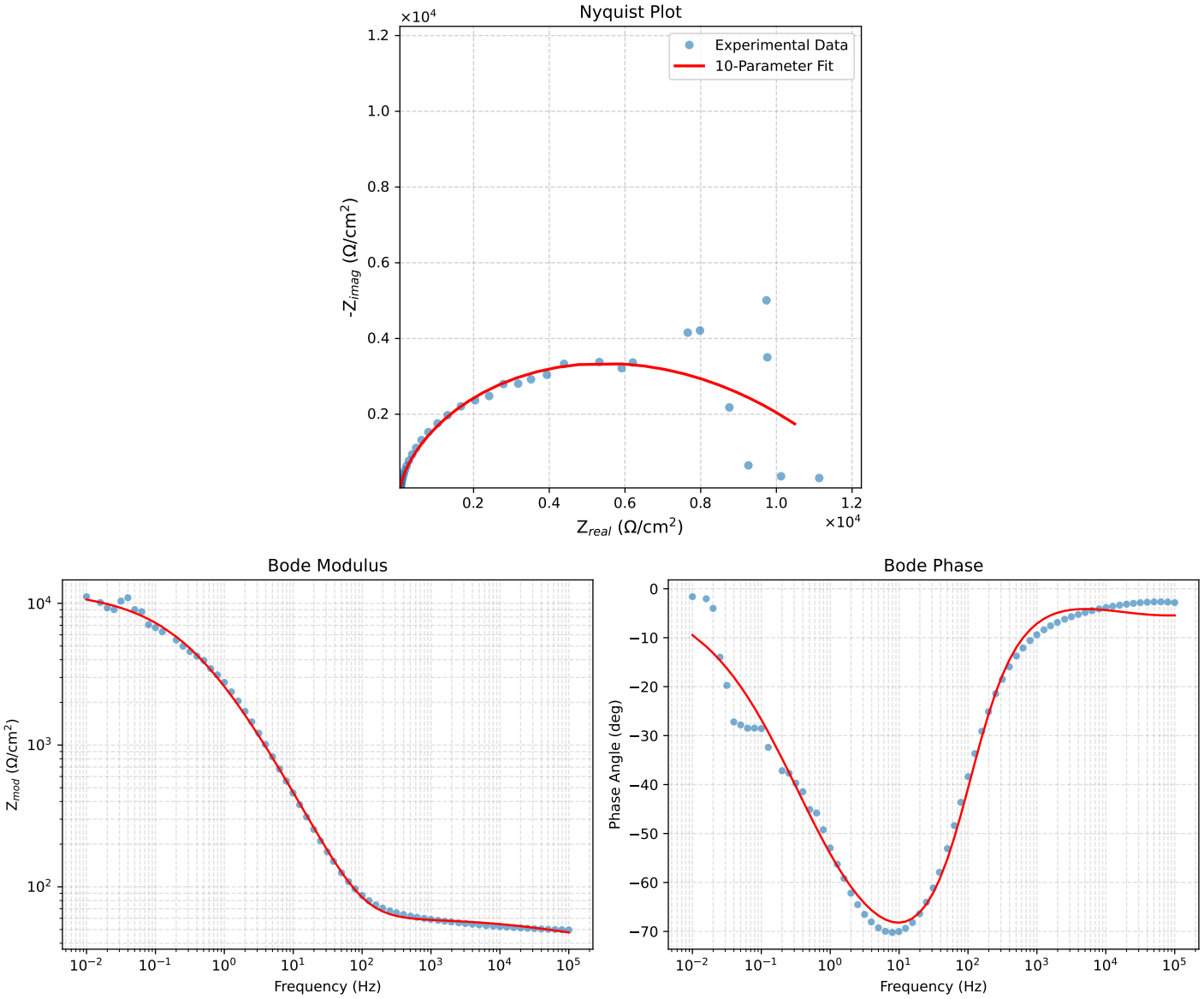

Figure 2: EIS Fit Results for Cauvel_3_Mo_4H

Analysis Results: 8H

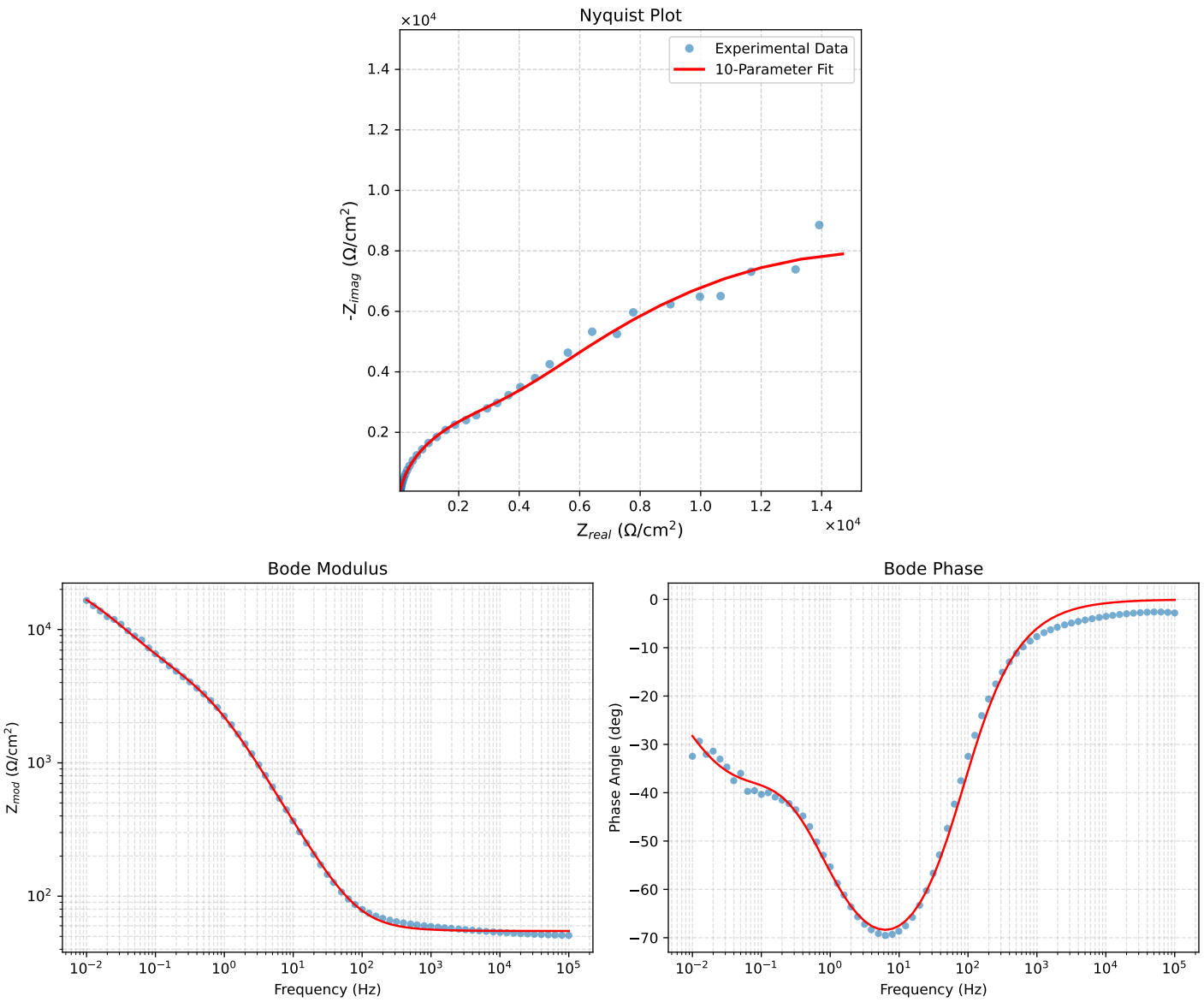

Figure 3: EIS Fit Results for Cauvel_3_Mo_8H