Comparative EIS Kinetics Report

Model Structure: `R0-p(R1-p(R2,CPE2),CPE1)`
Used data: original data

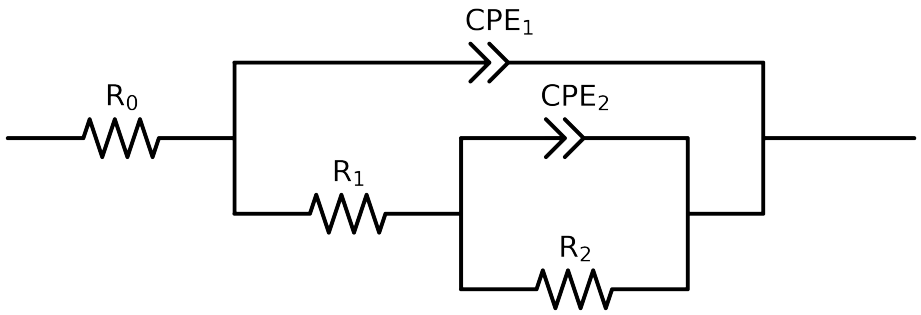

Element	Unit	Bounds	Cauvel_4_NaCl_1H	Cauvel_4_NaCl_4H	Cauvel_4_NaCl_8H
R_0	Ω	$[1.0e-03, 1.0e+03]$	$7.27e+01 \pm 5.2e-01$	$6.14e+01 \pm 3.4e+00$	$6.18e+01 \pm 2.4e+00$
R_1	Ω	$[1.0e+00, 1.0e+08]$	$7.38e+03 \pm 2.9e+02$	$1.95e+01 \pm 3.1e+00$	$1.94e+01 \pm 2.1e+00$
R_2	Ω	$[1.0e+00, 1.0e+12]$	$3.42e+03 \pm 3.9e+02$	$1.65e+04 \pm 6.0e+02$	$2.47e+04 \pm 9.1e+02$
Q_2	Ω^{-1} sec^a	$[1.0e-11, 1.0e-03]$	$3.28e-04 \pm 5.7e-05$	$4.08e-05 \pm 5.4e-06$	$4.71e-05 \pm 4.6e-06$
n_2	-	$[5.0e-01, 1.0e+00]$	$1.00e+00 \pm 8.2e-02$	$9.11e-01 \pm 1.6e-02$	$9.06e-01 \pm 1.2e-02$
Q_1	Ω^{-1} sec^a	$[1.0e-11, 1.0e-03]$	$3.76e-05 \pm 9.7e-07$	$7.56e-05 \pm 4.4e-06$	$8.38e-05 \pm 3.9e-06$
n_1	-	$[5.0e-01, 1.0e+00]$	$8.52e-01 \pm 5.0e-03$	$5.00e-01 \pm 3.5e-02$	$5.00e-01 \pm 2.4e-02$
χ^2	-	-	$1.196e-03$	$7.656e-04$	$4.447e-04$

Analysis Results: 1H

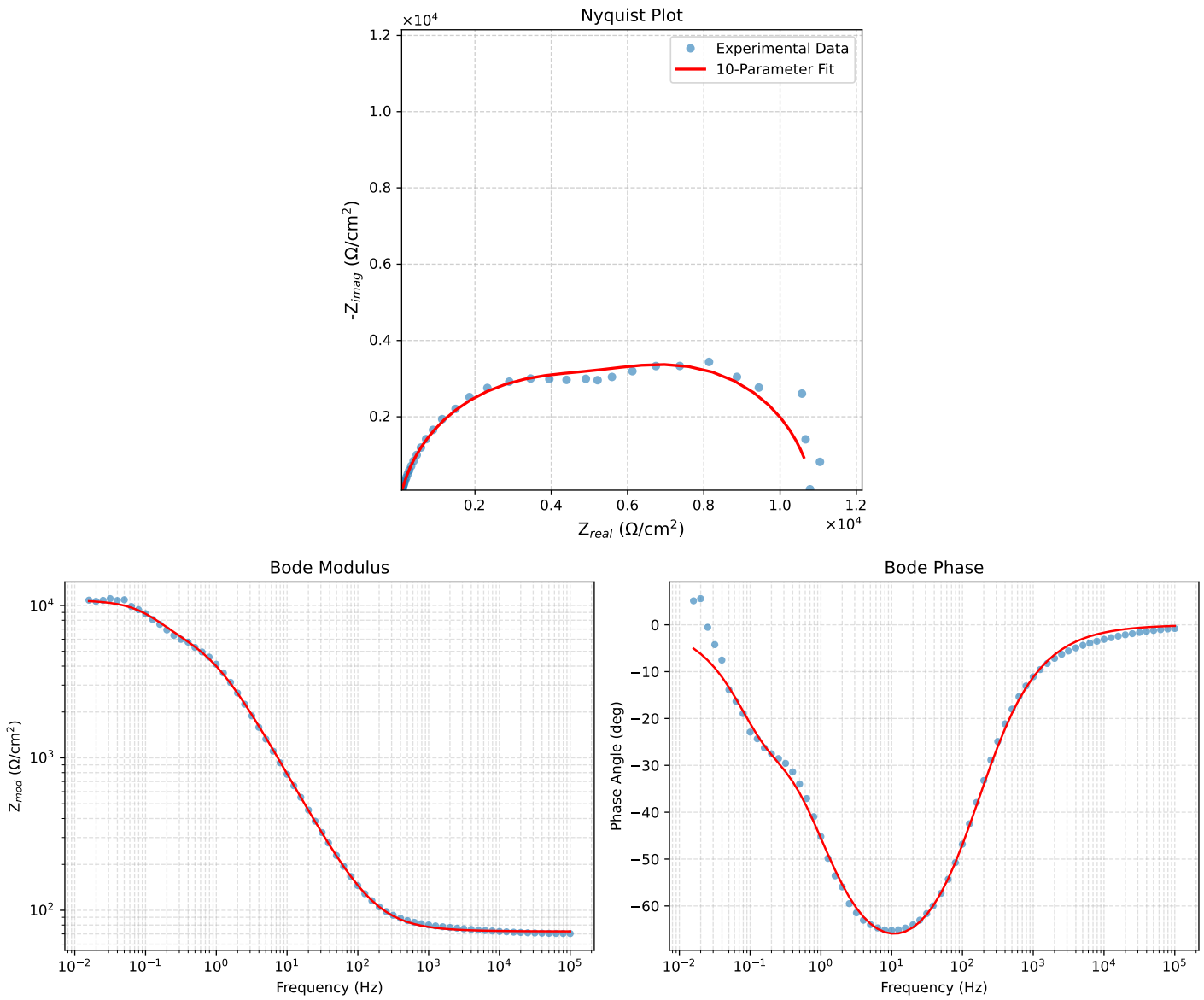

Figure 1: EIS Fit Results for Cauvel_4_NaCl_1H

Analysis Results: 4H

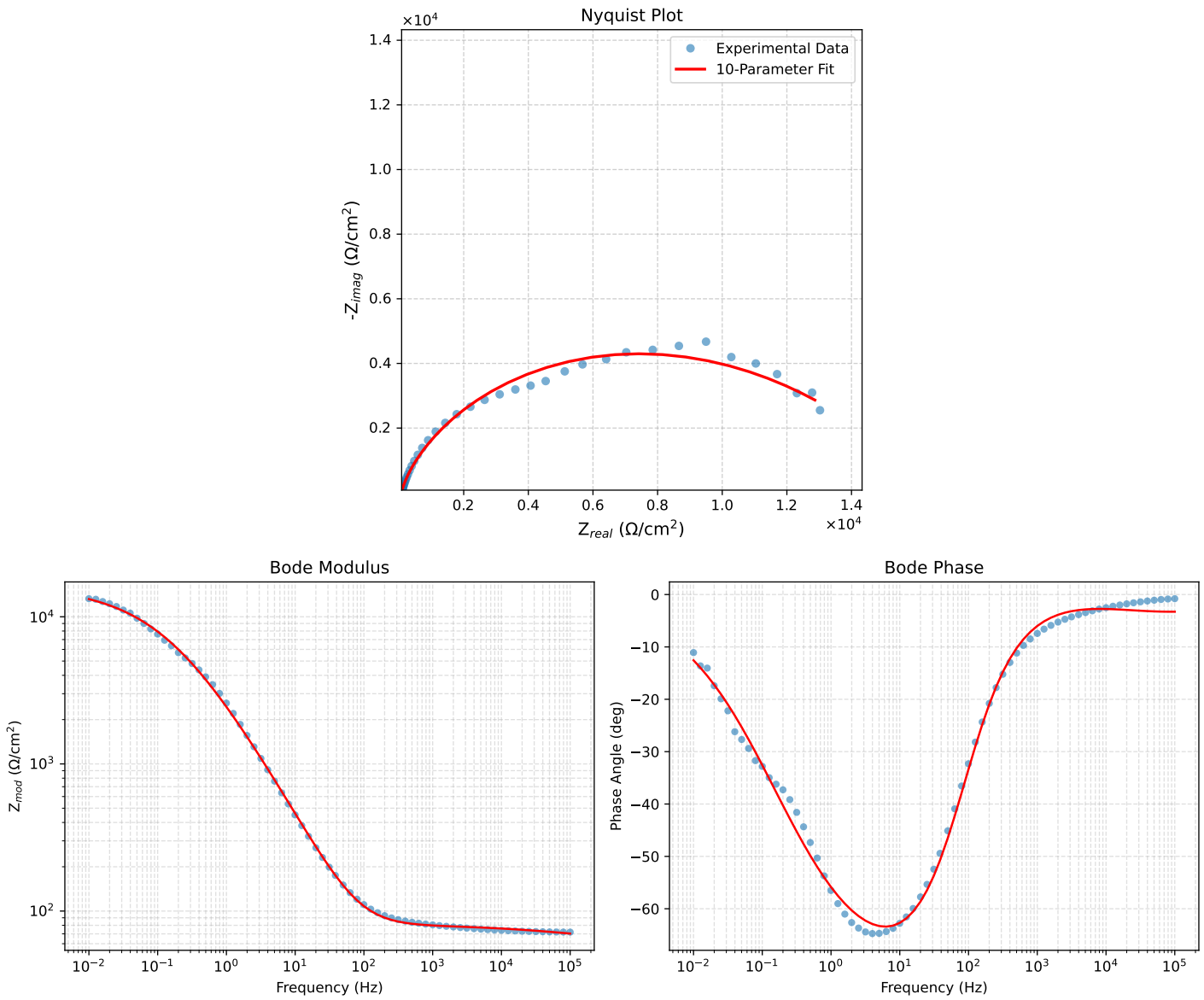

Figure 2: EIS Fit Results for Cauvel_4_NaCl_4H

Analysis Results: 8H

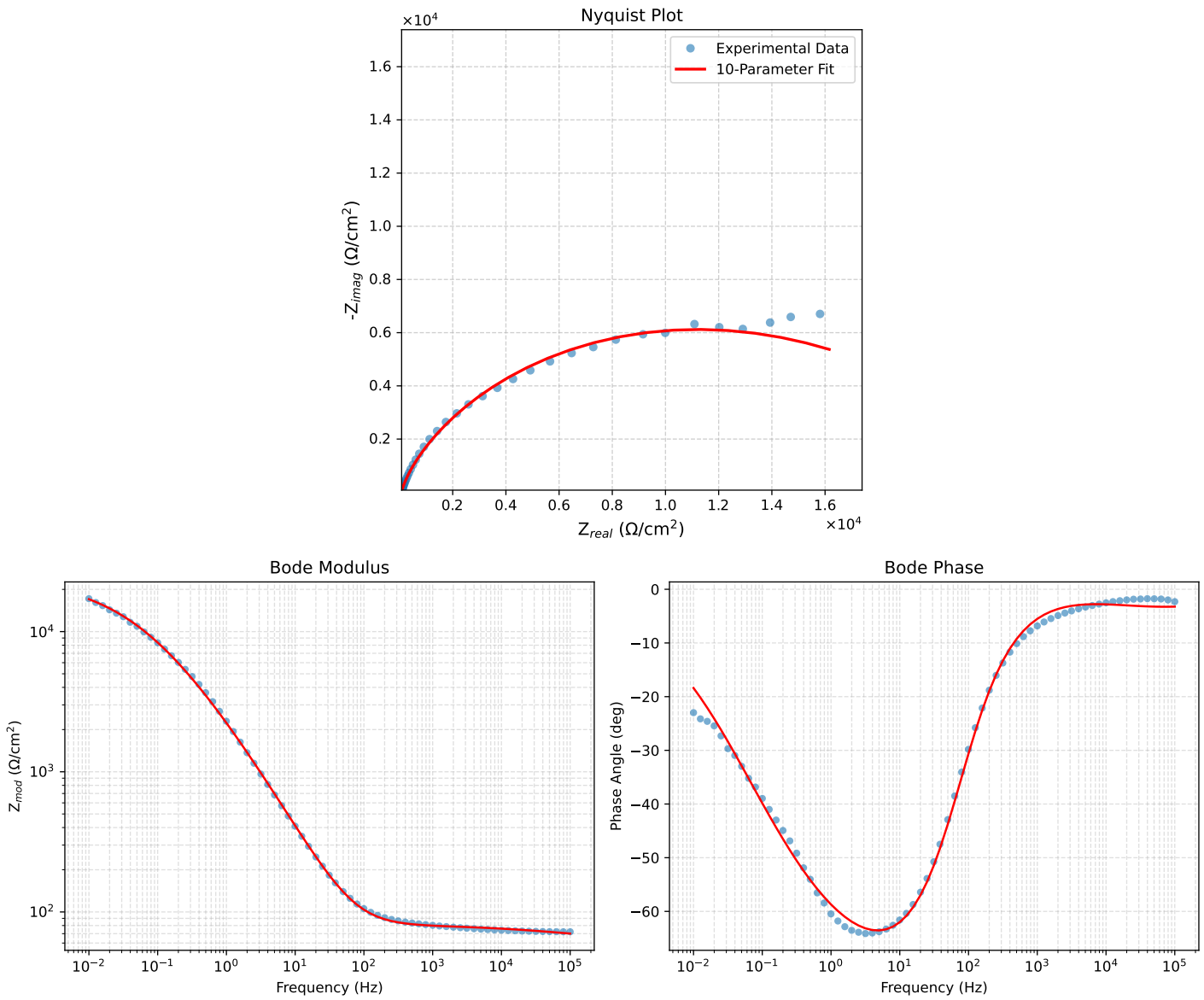

Figure 3: EIS Fit Results for Cauvel_4_NaCl_8H