Comparative EIS Kinetics Report

Model Structure: `R0-p(R1-p(R2,CPE2),CPE1)`
Used data: altered data, first 6 points removed and points with $freq > 2e+04$ removed

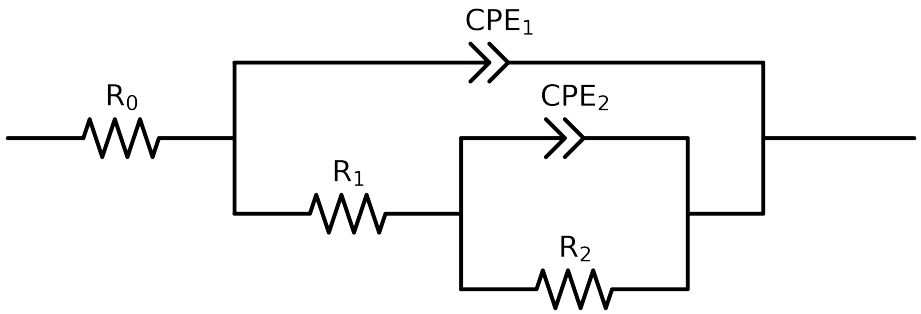

Element	Unit	Bounds	Cauvel_1_MBT_1H	Cauvel_1_MBT_4H	Cauvel_1_MBT_8H
R_0	Ω	$[1.0e-03, 1.0e+03]$	$8.12e+01 \pm 5.9e-01$	$7.70e+01 \pm 4.4e-01$	$7.58e+01 \pm 4.1e-01$
R_1	Ω	$[1.0e+00, 1.0e+08]$	$3.55e+05 \pm 7.6e+03$	$5.25e+05 \pm 2.4e+04$	$1.07e+03 \pm 4.1e+04$
R_2	Ω	$[1.0e+00, 1.0e+08]$	$2.92e+01 \pm 7.6e+03$	$1.00e+08 \pm 4.3e-03$	$7.68e+05 \pm 4.1e+04$
Q_2	Ω^{-1} sec^a	$[1.0e-11, 1.0e-03]$	$4.40e-10 \pm 4.7e+01$	$4.77e-05 \pm 1.7e-05$	$5.60e-07 \pm 1.8e-07$
n_2	-	$[5.0e-01, 1.0e+00]$	$6.66e-01 \pm 1.2e-12$	$1.00e+00 \pm 2.4e-01$	$5.00e-01 \pm 2.7e-01$
Q_1	Ω^{-1} sec^a	$[1.0e-11, 1.0e-03]$	$6.07e-06 \pm 2.4e-07$	$6.67e-06 \pm 4.7e-08$	$6.64e-06 \pm 3.0e-07$
n_1	-	$[5.0e-01, 1.0e+00]$	$9.28e-01 \pm 5.0e-03$	$9.15e-01 \pm 1.4e-03$	$9.15e-01 \pm 5.0e-03$
χ^2	-	-	$6.871e-04$	$4.624e-04$	$3.330e-04$

Analysis Results: 1H

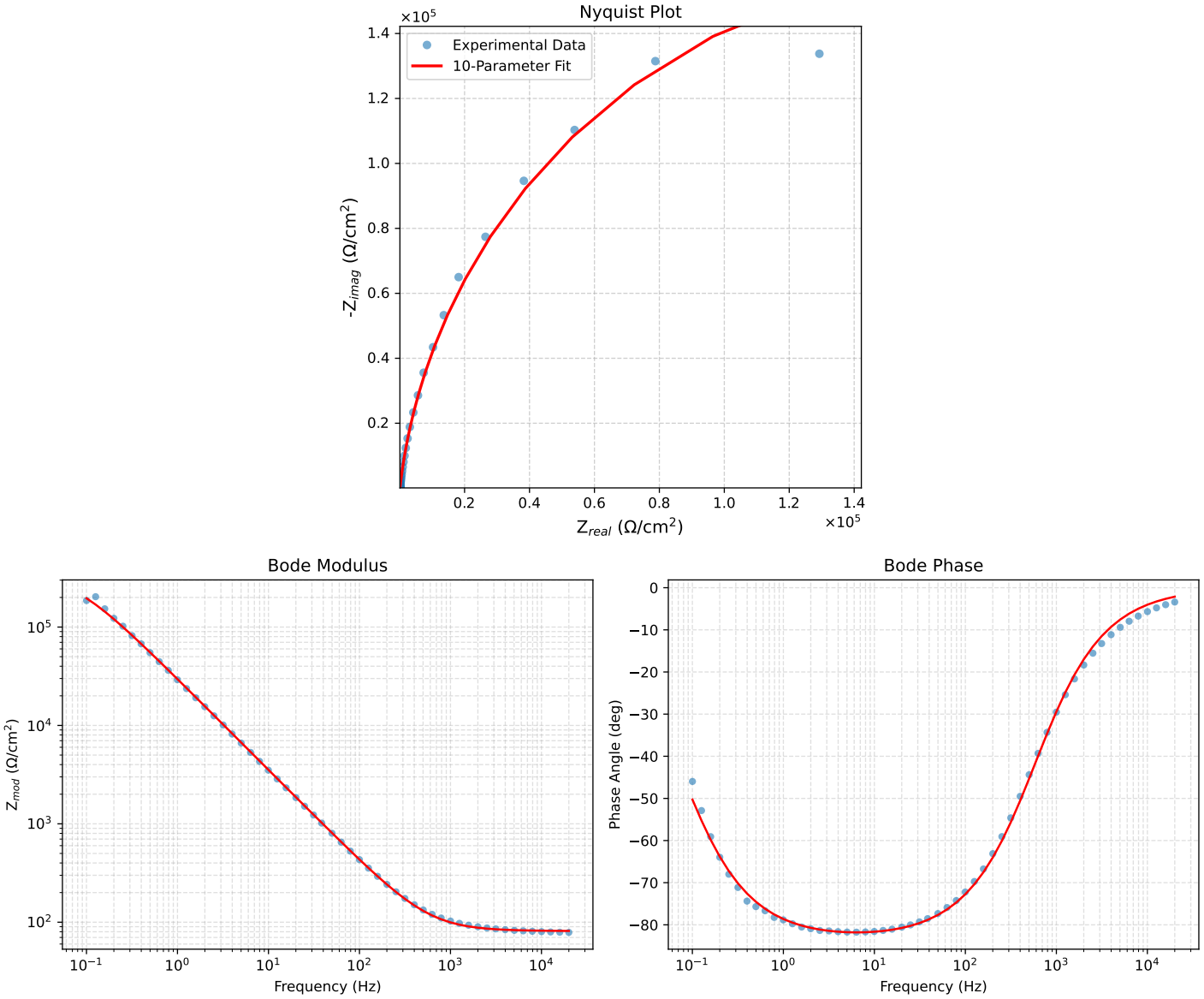

Figure 1: EIS Fit Results for Cauvel_1_MBT_1H

Analysis Results: 4H

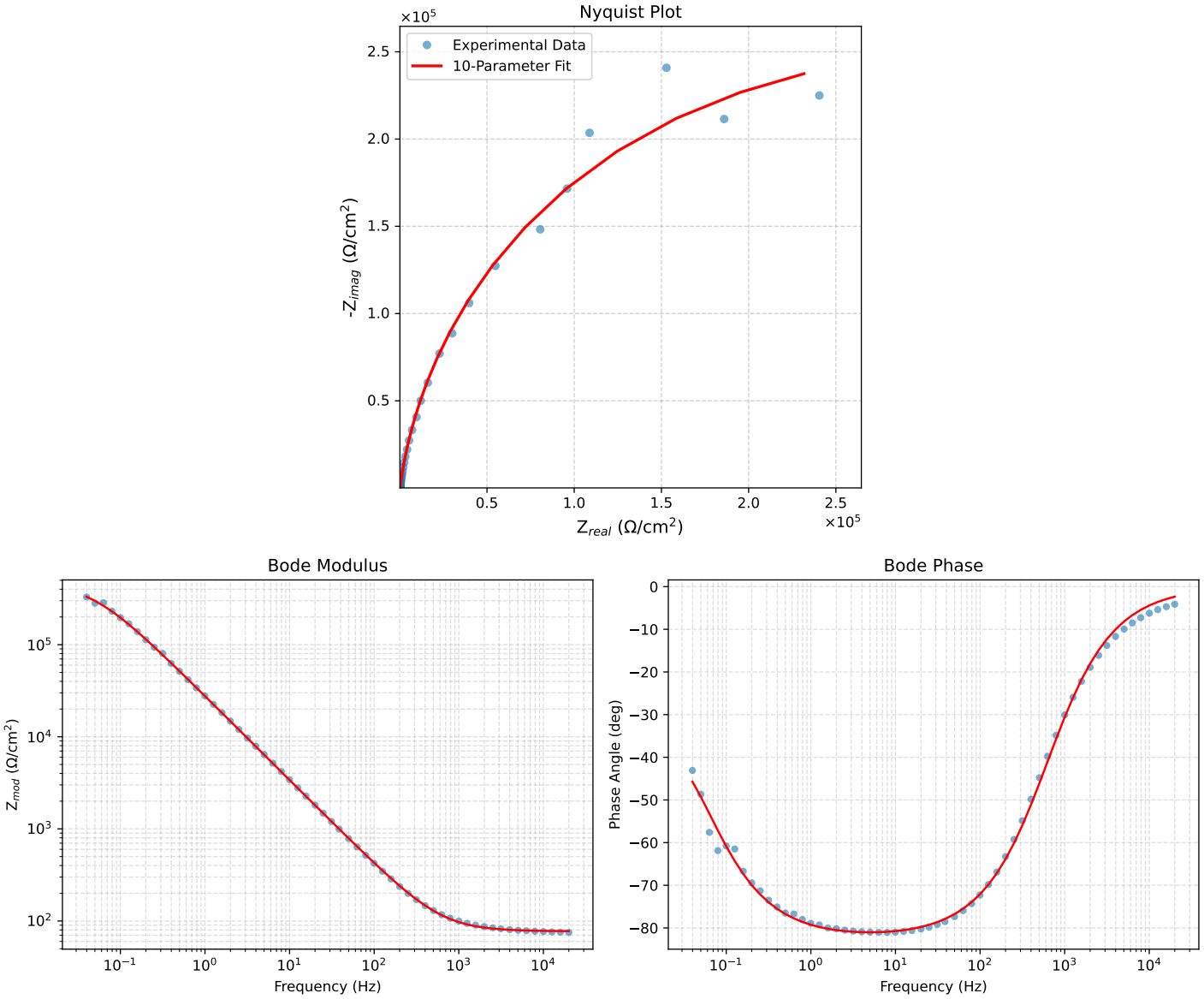

Figure 2: EIS Fit Results for Cauvel_1_MBT_4H

Analysis Results: 8H

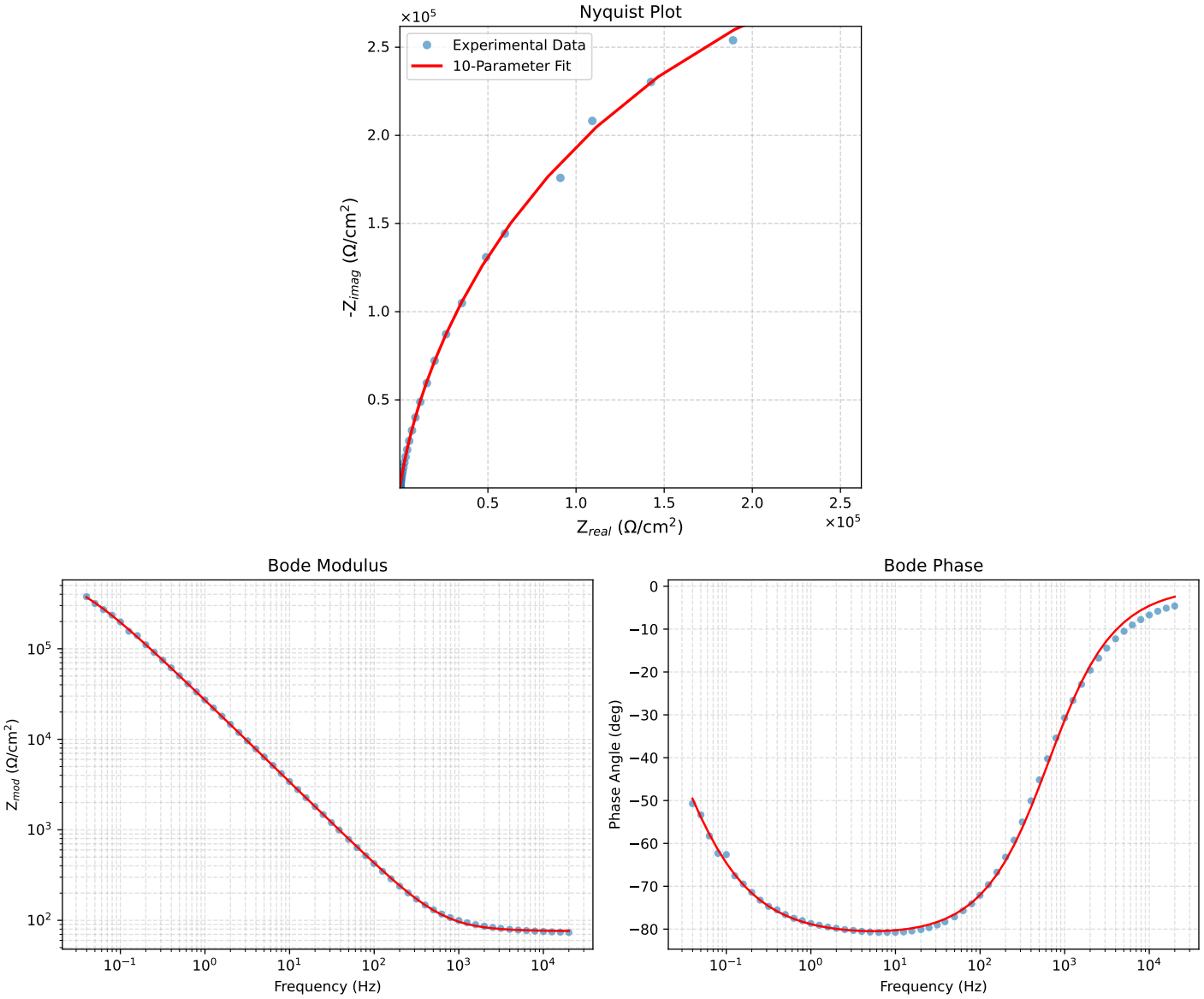

Figure 3: EIS Fit Results for Cauvel_1_MBT_8H