Comparative EIS Kinetics Report

Model Structure: `R0-p(R1-p(R2-p(R3,CPE3),CPE2),CPE1)`
Used data: original data

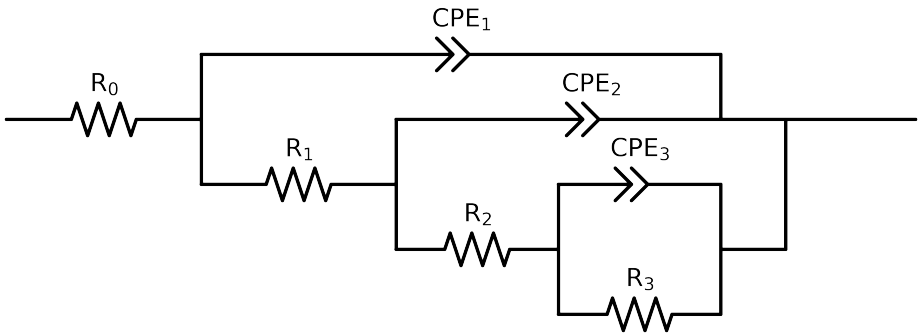

Element	Unit	Bounds	Cauvel_4_NaVO3_24H	Cauvel_4_NaVO3_48H	Cauvel_4_NaVO3_72H	Cauvel_4_NaVO3_168H
R_0	Ω	$[1.0e-03, 1.0e+03]$	$3.84e-02 \pm 1.7e+02$	$6.77e+01 \pm 2.7e-01$	$6.57e+01 \pm 1.2e-01$	$3.30e+01 \pm 2.1e+02$
R_1	Ω	$[1.0e+00, 1.0e+08]$	$6.69e+01 \pm 1.7e+02$	$2.26e+01 \pm 7.7e+00$	$3.24e+05 \pm 3.7e+03$	$3.64e+01 \pm 2.1e+02$
R_2	Ω	$[1.0e+00, 1.0e+08]$	$3.08e+05 \pm 7.9e+03$	$3.16e+05 \pm 4.4e+03$	$3.72e+05 \pm 1.0e+01$	$2.83e+05 \pm 7.3e+03$
R_3	Ω	$[1.0e+00, 1.0e+08]$	$1.86e+05 \pm 7.5e+04$	$1.00e+08 \pm 5.7e-04$	$1.00e+08 \pm 2.9e-05$	$9.42e+07 \pm 1.7e-02$
Q_3	Ω^{-1} sec^a	$[1.0e-11, 1.0e-03]$	$1.76e-04 \pm 6.6e-05$	$2.52e-04 \pm 3.9e-05$	$9.84e-05 \pm 2.3e-04$	$3.73e-05 \pm 4.4e-06$
n_3	-	$[5.0e-01, 1.0e+00]$	$1.00e+00 \pm 1.3e-01$	$1.00e+00 \pm 5.4e-02$	$1.00e+00 \pm 7.7e-01$	$6.16e-01 \pm 3.4e-02$
Q_2	Ω^{-1} sec^a	$[1.0e-11, 1.0e-03]$	$1.03e-05 \pm 3.3e-07$	$7.26e-06 \pm 8.0e-07$	$1.56e-04 \pm 2.9e-05$	$1.09e-05 \pm 4.5e-08$
n_2	-	$[5.0e-01, 1.0e+00]$	$8.50e-01 \pm 2.8e-03$	$7.88e-01 \pm 8.1e-03$	$1.00e+00 \pm 7.6e-02$	$8.28e-01 \pm 1.2e-03$
Q_1	Ω^{-1} sec^a	$[1.0e-11, 1.0e-03]$	$8.86e-08 \pm 3.9e-07$	$3.75e-06 \pm 7.9e-07$	$1.07e-05 \pm 2.6e-08$	$2.88e-09 \pm 6.3e-09$
n_1	-	$[5.0e-01, 1.0e+00]$	$6.88e-01 \pm 1.7e-01$	$9.04e-01 \pm 1.2e-02$	$8.38e-01 \pm 4.8e-04$	$1.00e+00 \pm 7.4e-01$
χ^2	-	-	$1.965e-04$	$9.036e-05$	$5.871e-05$	$1.254e-04$

Analysis Results: 24H

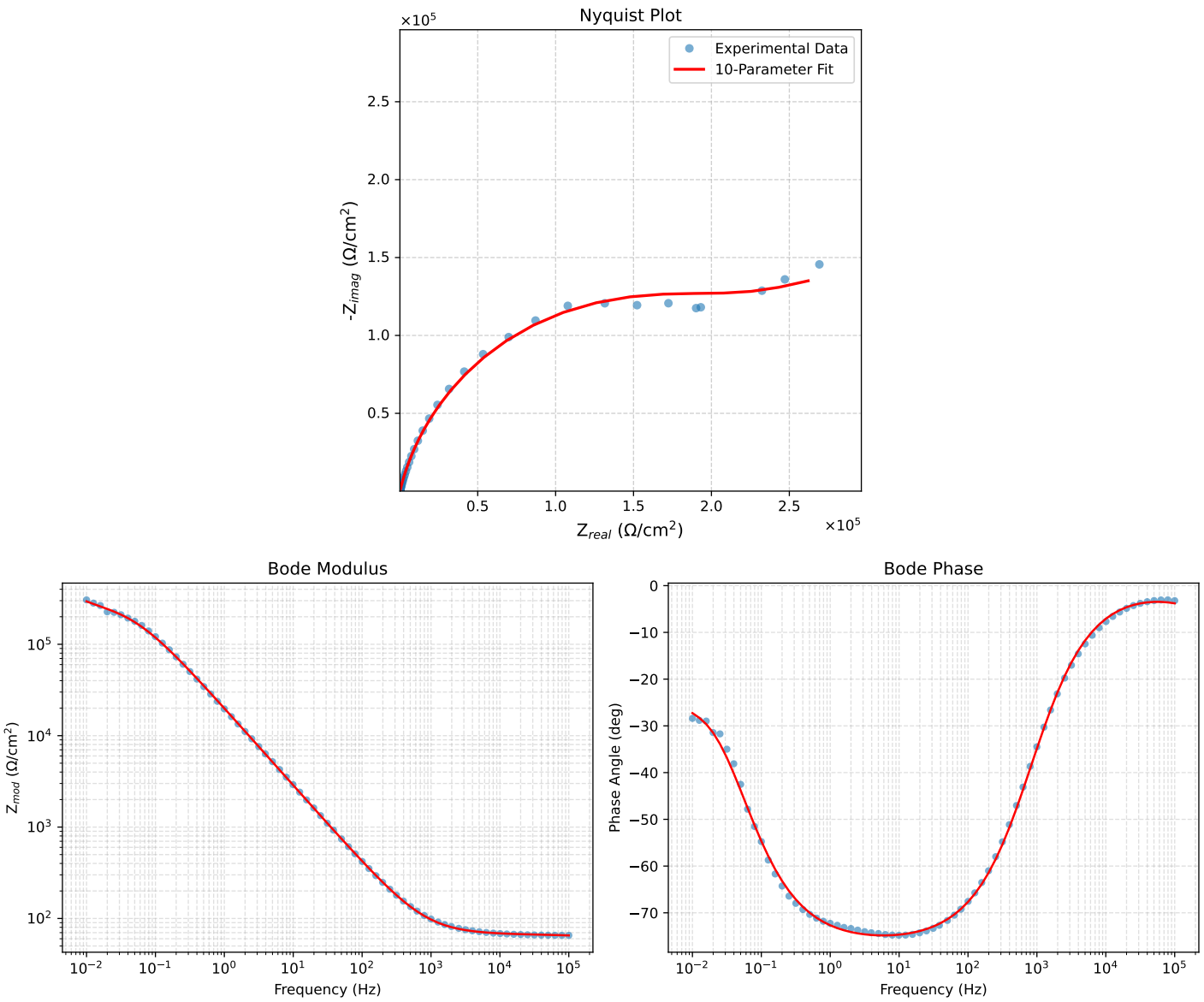

Figure 1: EIS Fit Results for Cauvel_4_NaVO3_24H

Analysis Results: 48H

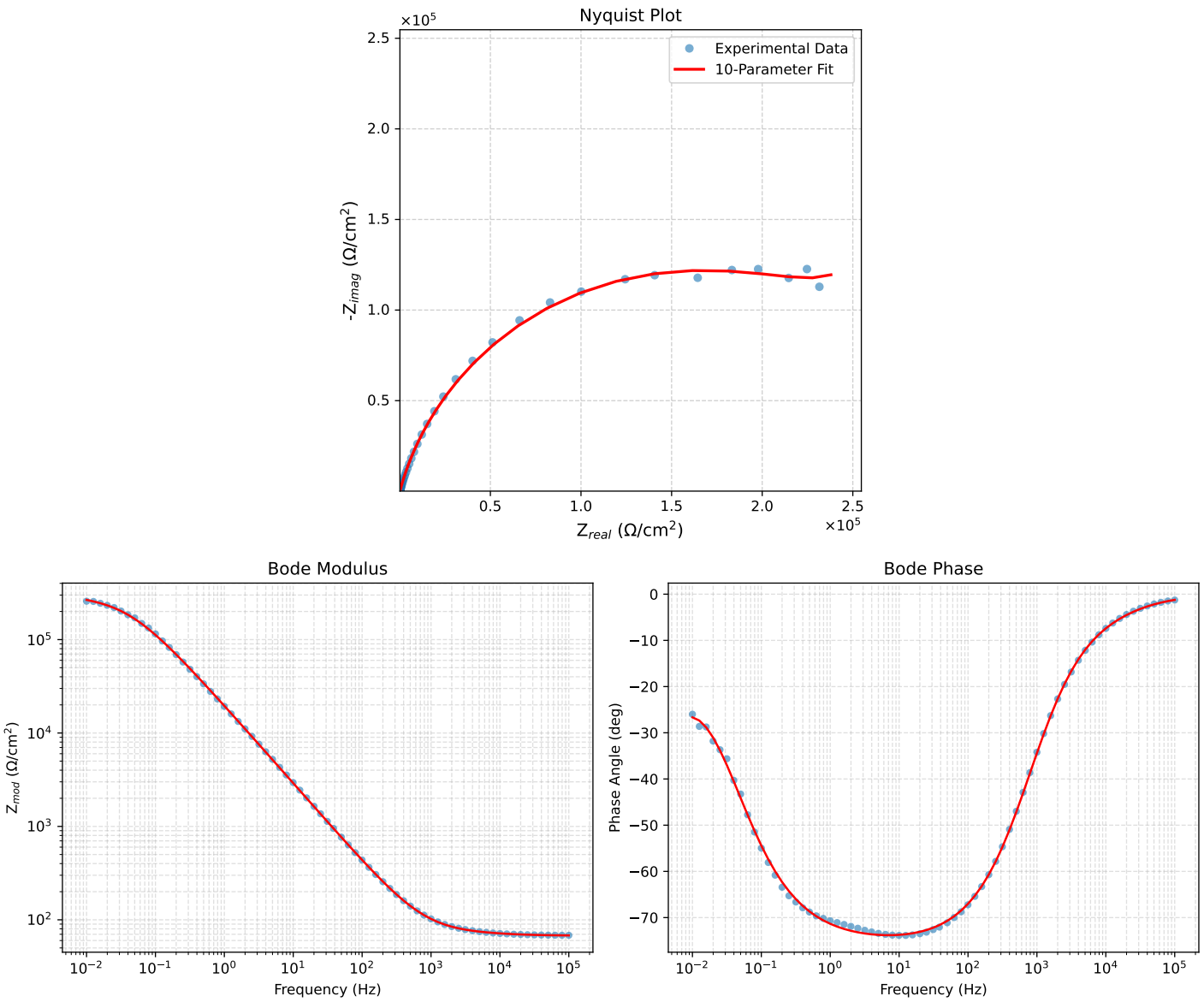

Figure 2: EIS Fit Results for Cauvel_4_NaVO3_48H

Analysis Results: 72H

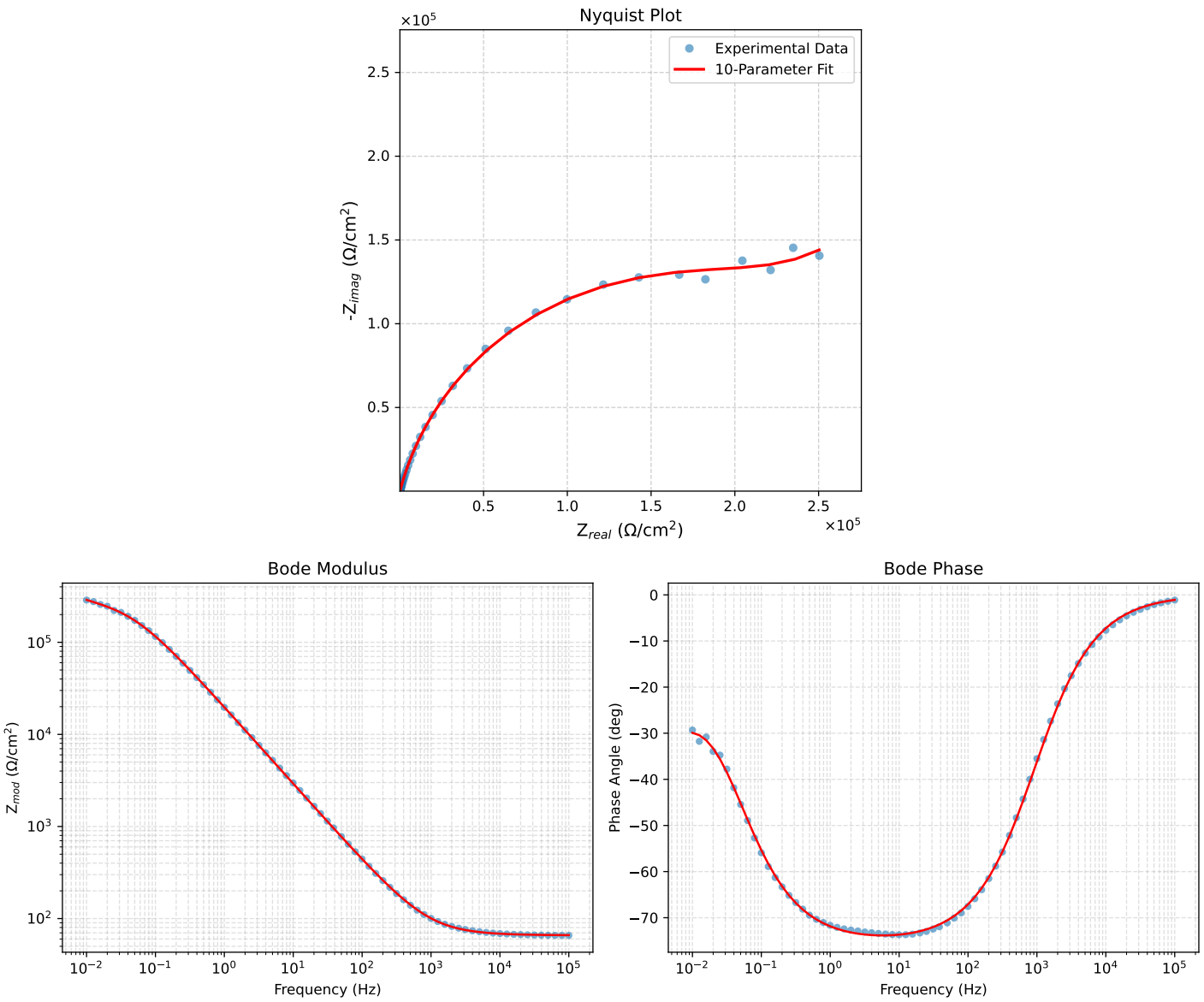

Figure 3: EIS Fit Results for Cauvel_4_NaVO3_72H

Analysis Results: 168H

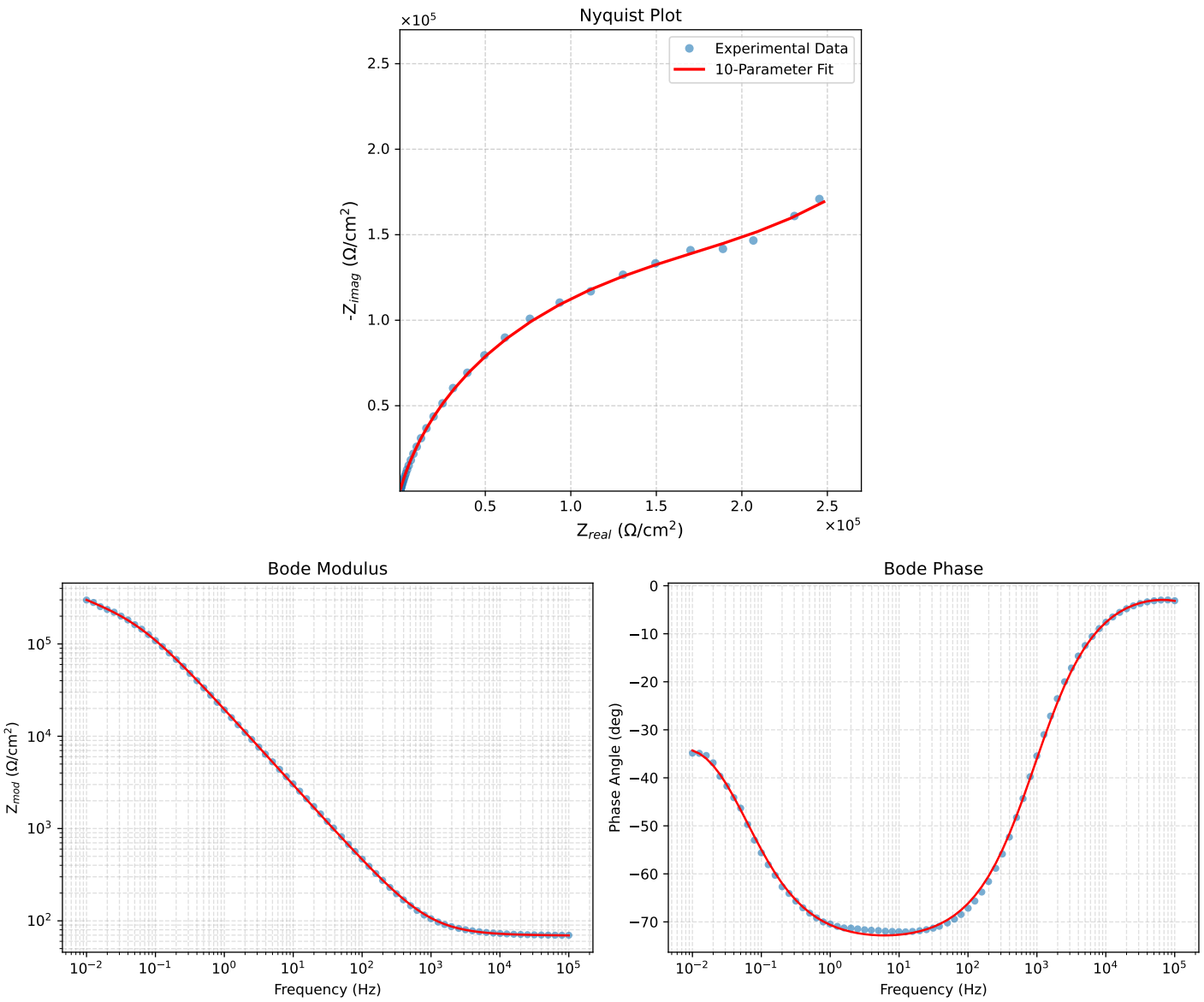

Figure 4: EIS Fit Results for Cauvel_4_NaVO3_168H