Comparative EIS Kinetics Report

Model Structure: `R0-p(R1-p(R2-p(R3,CPE3),CPE2),CPE1)`
Used data: altered data, first 6 points removed and points with $freq > 2e+04$ and $freq < 1e-03$ removed

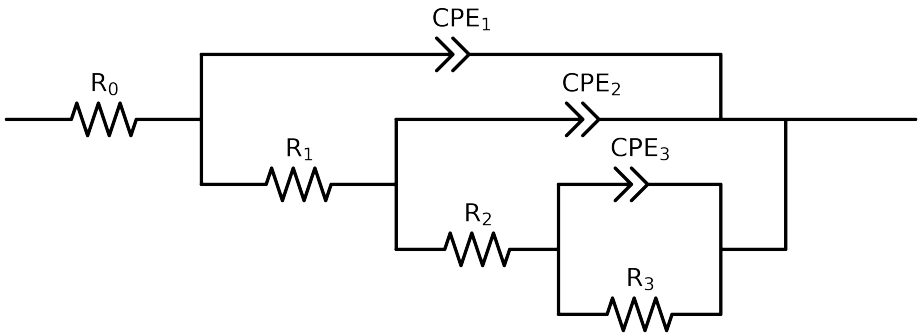

Element	Unit	Bounds	Cauvel_2_8HQ_168H
R_0	Ω	$[1.0e-03, 1.0e+03]$	$7.85e+01 \pm 1.2e+00$
R_1	Ω	$[1.0e+00, 1.0e+08]$	$3.15e+02 \pm 1.1e+02$
R_2	Ω	$[1.0e+00, 1.0e+08]$	$2.02e+03 \pm 9.3e+01$
R_3	Ω	$[1.0e+00, 1.0e+08]$	$1.40e+04 \pm 1.8e+02$
Q_3	Ω^{-1} sec^a	$[1.0e-11, 1.0e-03]$	$8.64e-05 \pm 5.1e-06$
n_3	-	$[5.0e-01, 1.0e+00]$	$7.52e-01 \pm 1.4e-02$
Q_2	Ω^{-1} sec^a	$[1.0e-11, 1.0e-03]$	$1.78e-05 \pm 8.8e-06$
n_2	-	$[5.0e-01, 1.0e+00]$	$6.90e-01 \pm 4.7e-02$
Q_1	Ω^{-1} sec^a	$[1.0e-11, 1.0e-03]$	$3.57e-05 \pm 1.3e-05$
n_1	-	$[5.0e-01, 1.0e+00]$	$6.14e-01 \pm 3.4e-02$
χ^2	-	-	$3.045e-05$

Analysis Results: 168H

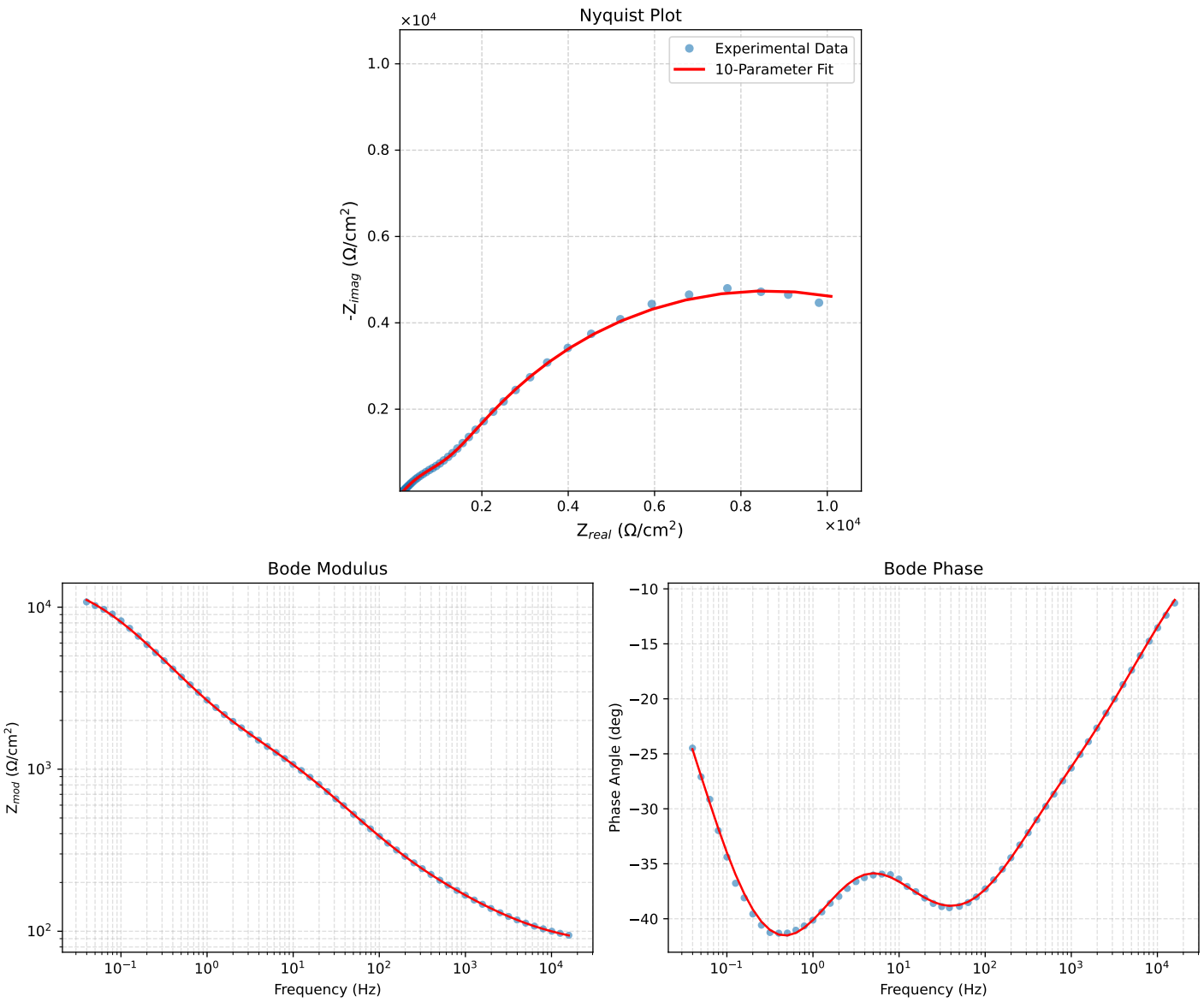

Figure 1: EIS Fit Results for Cauvel_2_8HQ_168H