Comparative EIS Kinetics Report

Model Structure: `R0-p(R1-p(R2,CPE2),CPE1)`
Used data: altered data, first 5 points removed and points with $freq > 1e+04$ and $freq < 1e-03$ removed

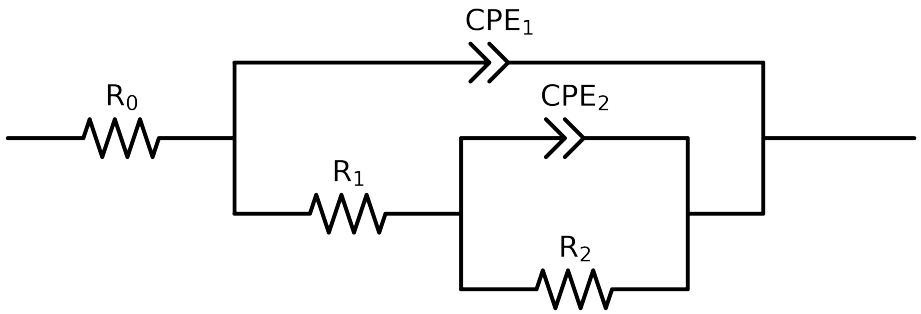

Element	Unit	Bounds	Cauvel_2_8HQ_48H	Cauvel_2_8HQ_72H
R_0	Ω	$[1.0e-03, 1.0e+03]$	$6.26e+01 \pm 4.2e-01$	$7.10e+01 \pm 5.1e-01$
R_1	Ω	$[1.0e+00, 1.0e+08]$	$3.20e+03 \pm 1.6e+02$	$2.85e+03 \pm 9.5e+01$
R_2	Ω	$[1.0e+00, 1.0e+12]$	$2.23e+04 \pm 2.8e+02$	$1.82e+04 \pm 2.2e+02$
Q_2	Ω^{-1} sec^a	$[1.0e-11, 1.0e-03]$	$2.73e-05 \pm 7.5e-07$	$4.20e-05 \pm 8.0e-07$
n_2	-	$[5.0e-01, 1.0e+00]$	$8.12e-01 \pm 1.1e-02$	$8.16e-01 \pm 9.1e-03$
Q_1	Ω^{-1} sec^a	$[1.0e-11, 1.0e-03]$	$2.44e-05 \pm 7.1e-07$	$2.54e-05 \pm 7.0e-07$
n_1	-	$[5.0e-01, 1.0e+00]$	$7.52e-01 \pm 4.0e-03$	$7.24e-01 \pm 3.8e-03$
χ^2	-	-	$1.706e-04$	$1.660e-04$

Analysis Results: 48H

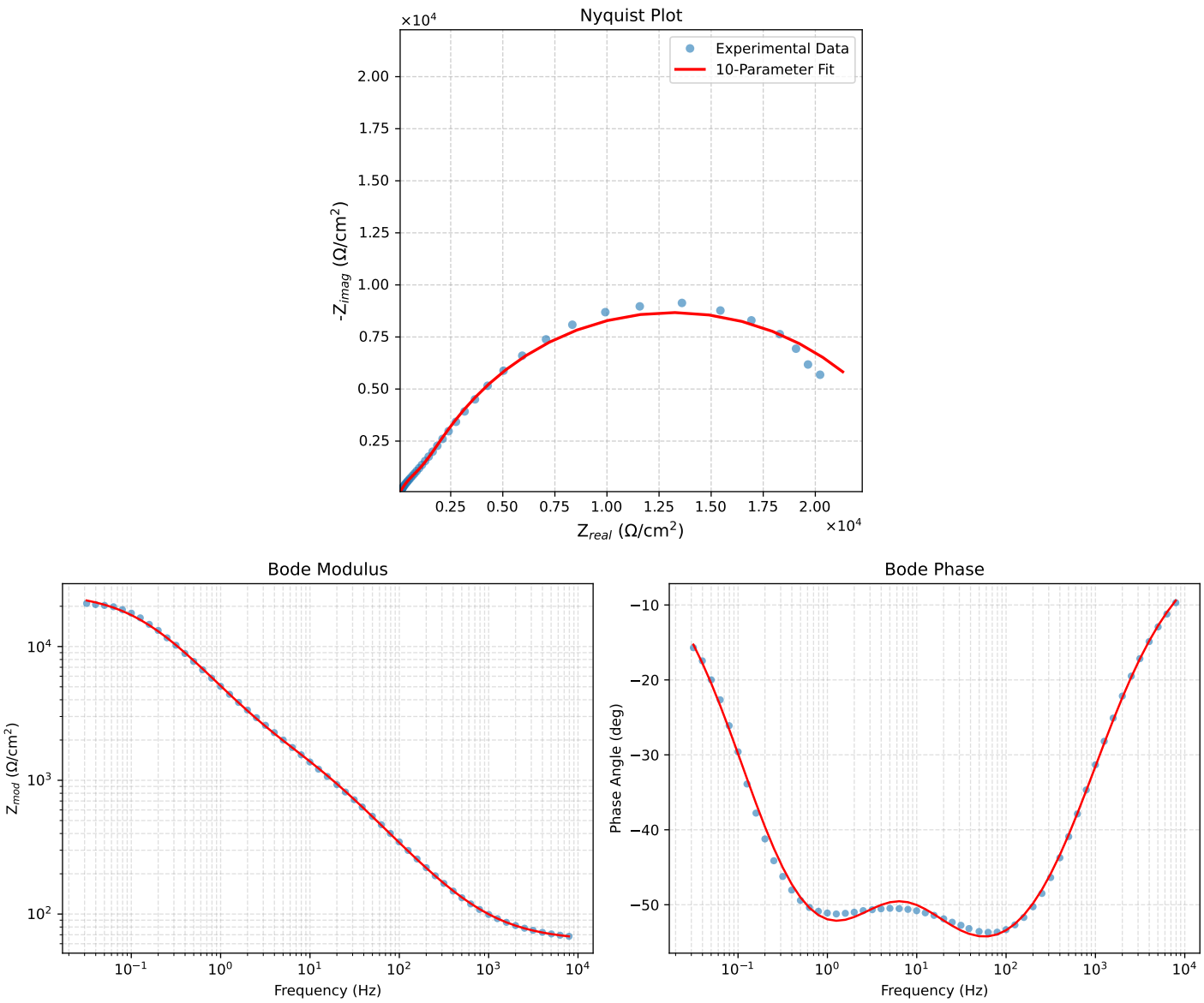

Figure 1: EIS Fit Results for Cauvel_2_8HQ_48H

Analysis Results: 72H

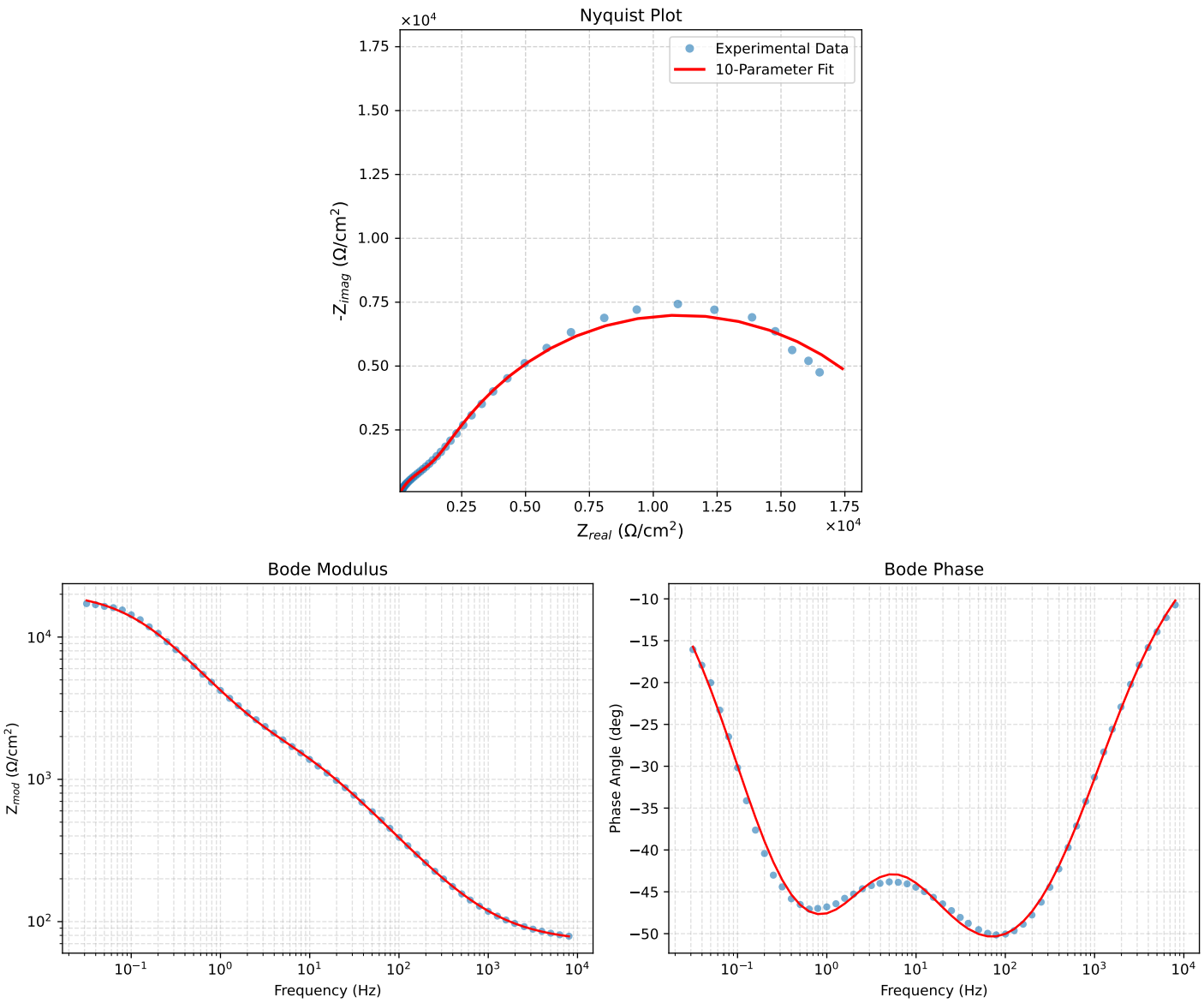

Figure 2: EIS Fit Results for Cauvel_2_8HQ_72H