Comparative EIS Kinetics Report

Model Structure: `R0-p(R1-p(R2,CPE2),CPE1)`
Used data: altered data, first 8 points removed and points with $freq > 1e+04$ and $freq < 1e-03$ removed

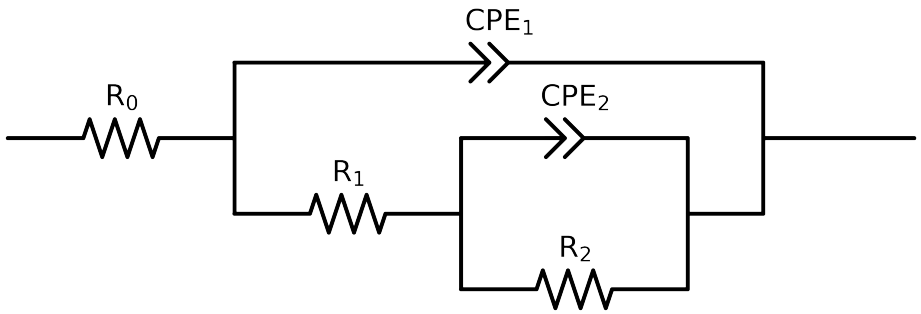

Element	Unit	Bounds	Cauvel_2_8HQ_48H	Cauvel_2_8HQ_72H
R_0	Ω	$[1.0e-03, 1.0e+03]$	$6.27e+01 \pm 3.3e-01$	$7.11e+01 \pm 3.8e-01$
R_1	Ω	$[1.0e+00, 1.0e+08]$	$3.08e+03 \pm 1.2e+02$	$2.76e+03 \pm 7.3e+01$
R_2	Ω	$[1.0e+00, 1.0e+12]$	$2.36e+04 \pm 3.1e+02$	$1.94e+04 \pm 2.5e+02$
Q_2	$\Omega^{-1}\ \sec^a$	$[1.0e-11, 1.0e-03]$	$2.82e-05 \pm 6.3e-07$	$4.33e-05 \pm 6.5e-07$
n_2	-	$[5.0e-01, 1.0e+00]$	$7.93e-01 \pm 8.8e-03$	$7.97e-01 \pm 7.5e-03$
Q_1	$\Omega^{-1}\ \sec^a$	$[1.0e-11, 1.0e-03]$	$2.40e-05 \pm 5.6e-07$	$2.50e-05 \pm 5.3e-07$
n_1	-	$[5.0e-01, 1.0e+00]$	$7.54e-01 \pm 3.2e-03$	$7.26e-01 \pm 2.9e-03$
χ^2	-	-	$1.030e-04$	$9.284e-05$

Analysis Results: 48H

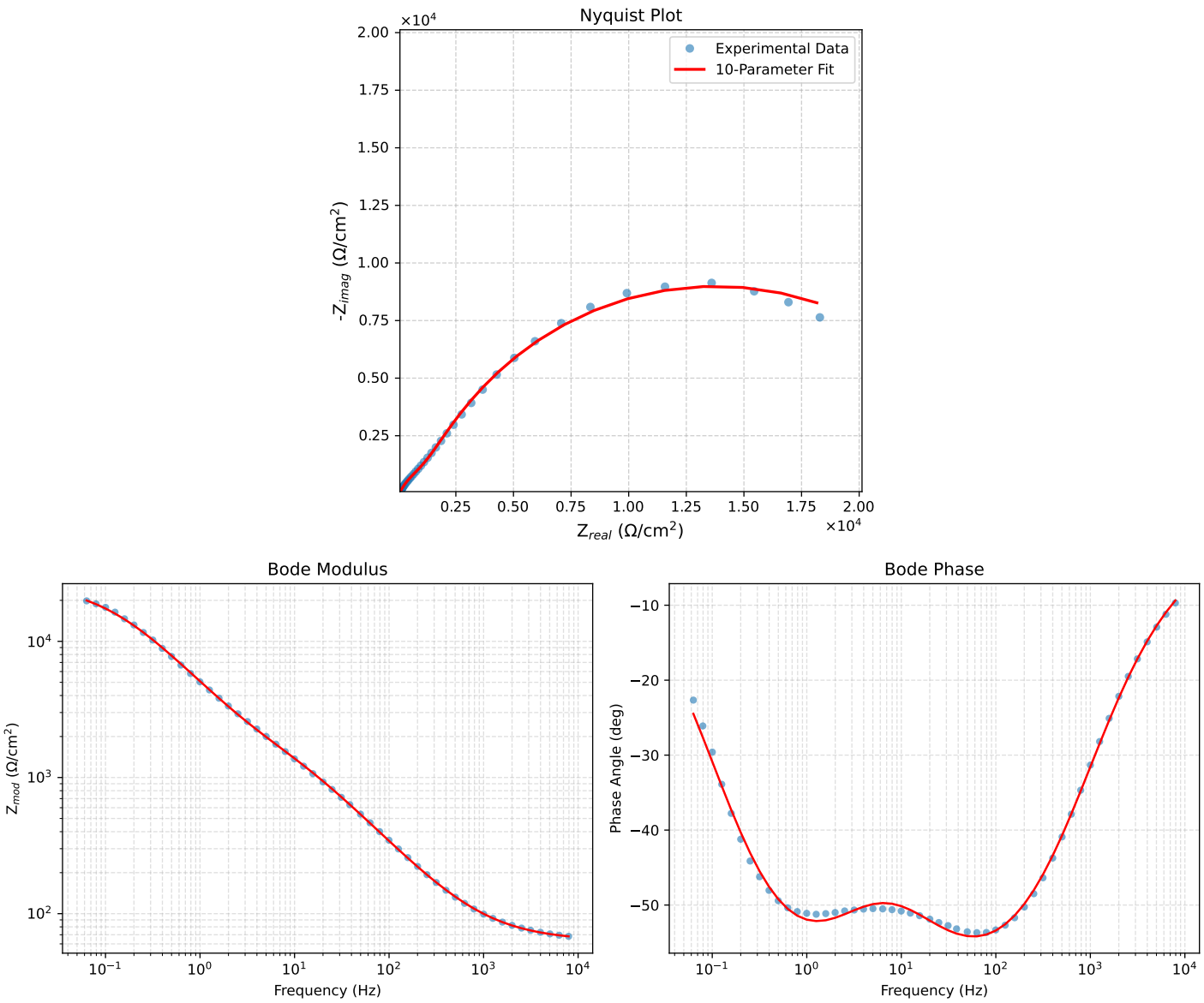

Figure 1: EIS Fit Results for Cauvel_2_8HQ_48H

Analysis Results: 72H

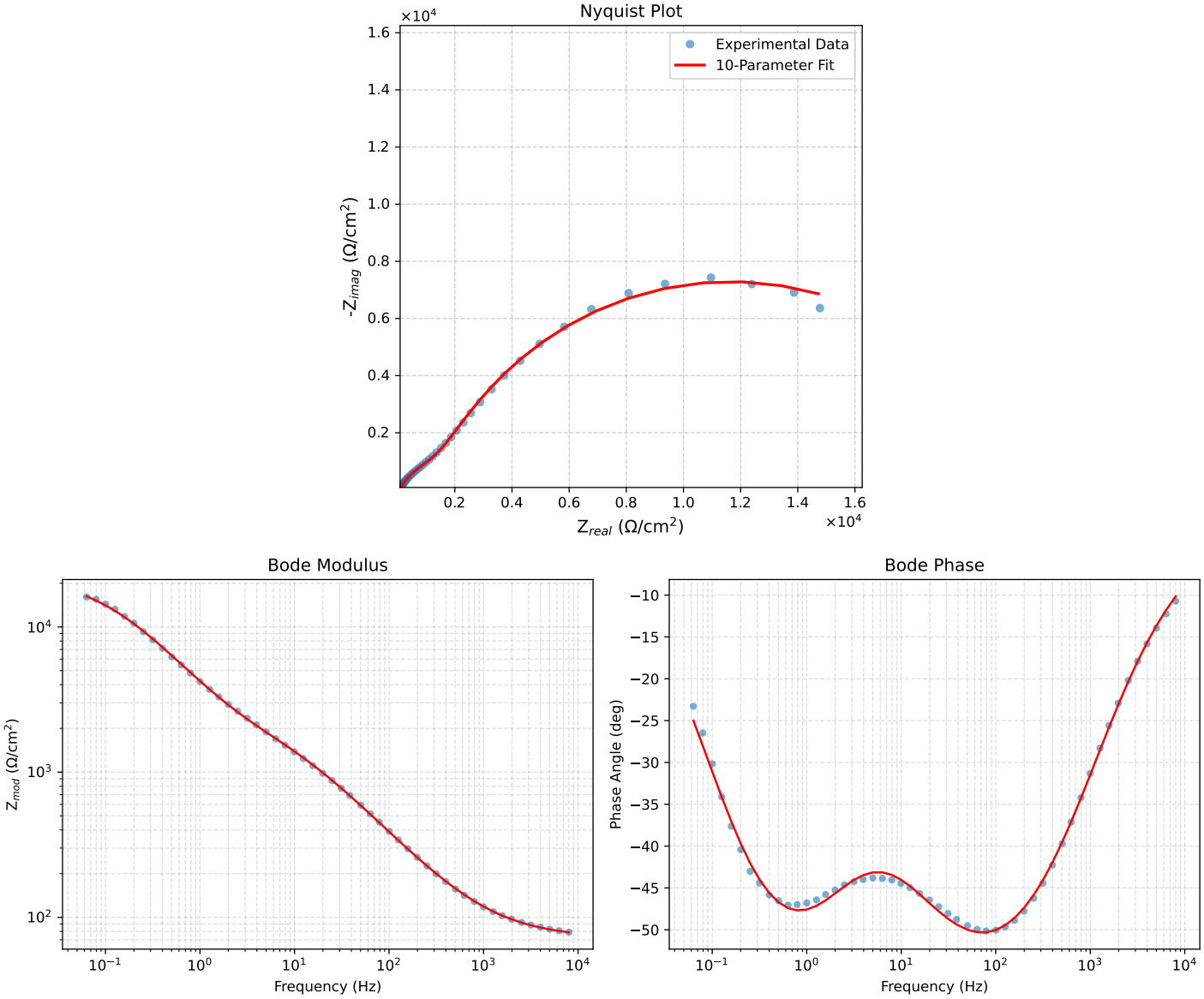

Figure 2: EIS Fit Results for Cauvel_2_8HQ_72H