Comparative EIS Kinetics Report

Model Structure: `R0-p(R1-p(R2,CPE2),CPE1)`
Used data: altered data, first 9 points removed and points with $freq > 2e+04$ and $freq < 1e-03$ removed

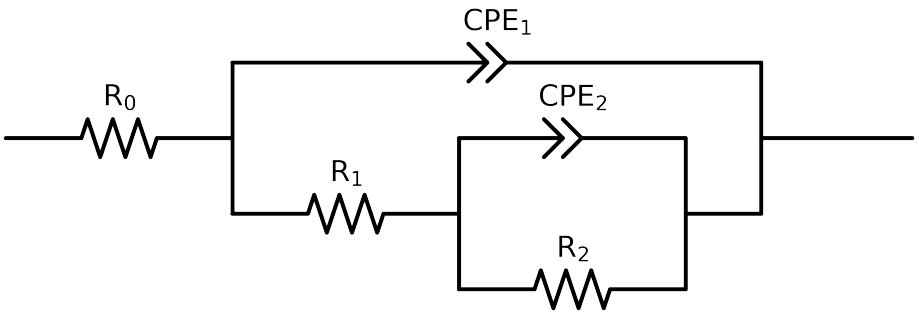

Element	Unit	Bounds	Cauvel_2_8HQ_8H
R_0	Ω	$[1.0e-03, 1.0e+03]$	$6.36e+01 \pm 4.7e-01$
R_1	Ω	$[1.0e+00, 1.0e+08]$	$4.73e+03 \pm 1.2e+03$
R_2	Ω	$[1.0e+00, 1.0e+12]$	$4.04e+04 \pm 1.1e+03$
Q_2	Ω^{-1} sec^a	$[1.0e-11, 1.0e-03]$	$2.71e-06 \pm 7.9e-07$
n_2	-	$[5.0e-01, 1.0e+00]$	$1.00e+00 \pm 5.5e-02$
Q_1	Ω^{-1} sec^a	$[1.0e-11, 1.0e-03]$	$1.37e-05 \pm 8.4e-07$
n_1	-	$[5.0e-01, 1.0e+00]$	$8.79e-01 \pm 8.1e-03$
χ^2	-	-	$5.087e-04$

Analysis Results: 8H

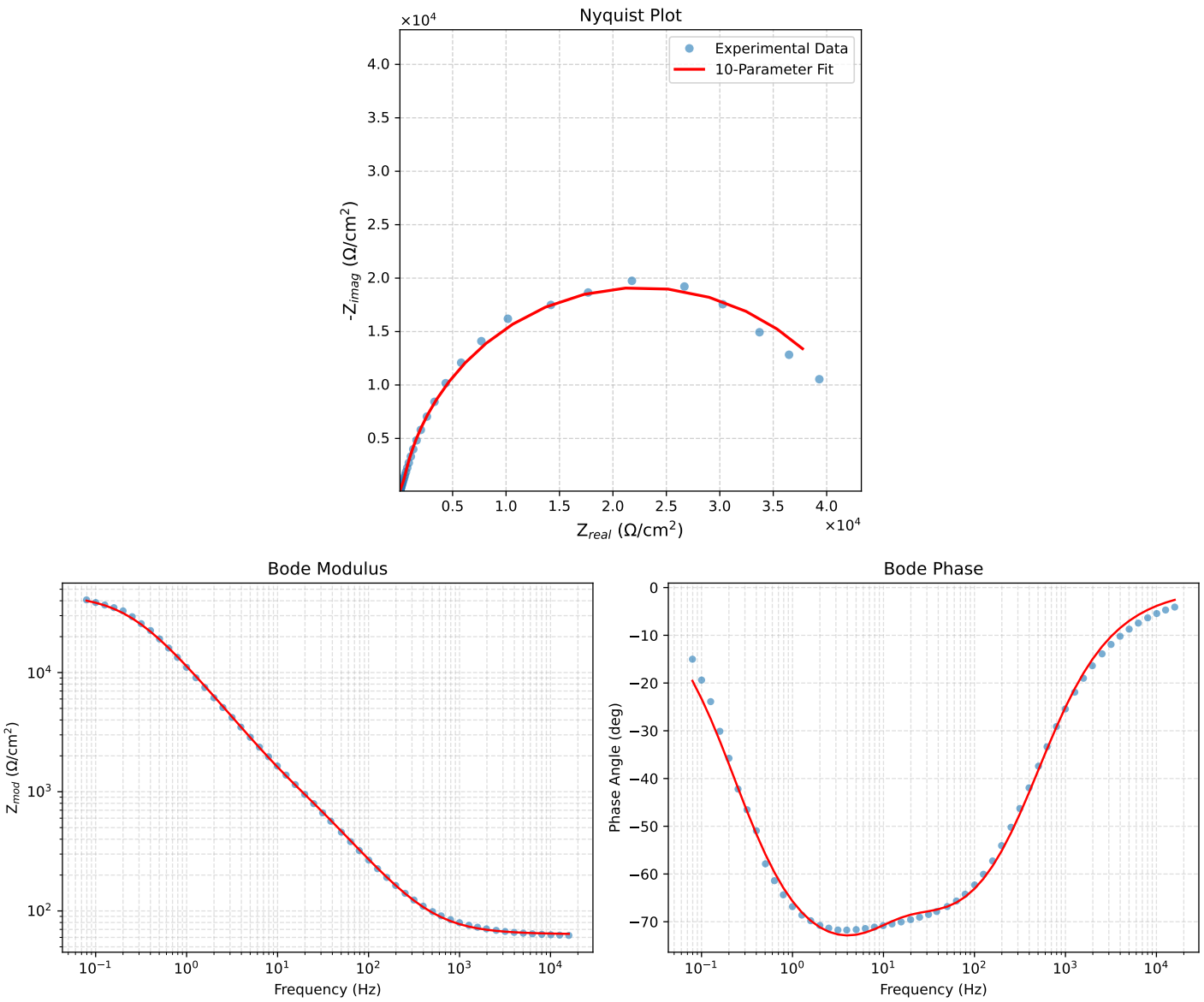

Figure 1: EIS Fit Results for Cauvel_2_8HQ_8H