Comparative EIS Kinetics Report

Model Structure: `R0-p(R1-p(R2,CPE2),CPE1)`
Used data: altered data, first 2 points removed and points with $freq > 2e+04$ removed

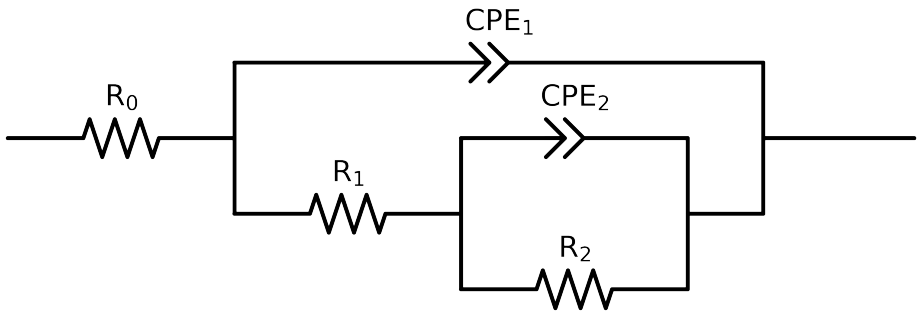

Element	Unit	Bounds	Cauvel_3_BTA_24H	Cauvel_3_BTA_48H	Cauvel_3_BTA_72H	Cauvel_3_BTA_168H
R_0	Ω	$[1.0e-03, 1.0e+03]$	$8.01e+01 \pm 4.2e-01$	$8.32e+01 \pm 4.2e-01$	$8.75e+01 \pm 3.8e-01$	$6.13e+01 \pm 5.1e+00$
R_1	Ω	$[1.0e+00, 1.0e+08]$	$1.36e+04 \pm 1.1e+03$	$7.83e+03 \pm 2.9e+02$	$7.35e+03 \pm 1.8e+02$	$4.14e+01 \pm 9.4e+00$
R_2	Ω	$[1.0e+00, 1.0e+08]$	$5.04e+04 \pm 1.2e+03$	$4.42e+04 \pm 6.3e+02$	$3.49e+04 \pm 5.0e+02$	$3.59e+04 \pm 3.2e+03$
Q_2	Ω^{-1} sec^a	$[1.0e-11, 1.0e-03]$	$6.46e-06 \pm 3.2e-07$	$2.26e-05 \pm 3.2e-07$	$3.91e-05 \pm 4.6e-07$	$2.49e-06 \pm 1.0e-06$
n_2	-	$[5.0e-01, 1.0e+00]$	$9.67e-01 \pm 2.3e-02$	$8.21e-01 \pm 1.0e-02$	$7.92e-01 \pm 9.3e-03$	$1.00e+00 \pm 4.3e-02$
Q_1	Ω^{-1} sec^a	$[1.0e-11, 1.0e-03]$	$1.34e-05 \pm 3.1e-07$	$1.12e-05 \pm 2.3e-07$	$1.07e-05 \pm 1.8e-07$	$5.89e-05 \pm 2.2e-06$
n_1	-	$[5.0e-01, 1.0e+00]$	$8.51e-01 \pm 3.4e-03$	$8.66e-01 \pm 3.1e-03$	$8.68e-01 \pm 2.6e-03$	$5.00e-01 \pm 2.4e-02$
χ^2	-	-	$2.819e-04$	$2.745e-04$	$2.272e-04$	$4.858e-03$

Analysis Results: 24H

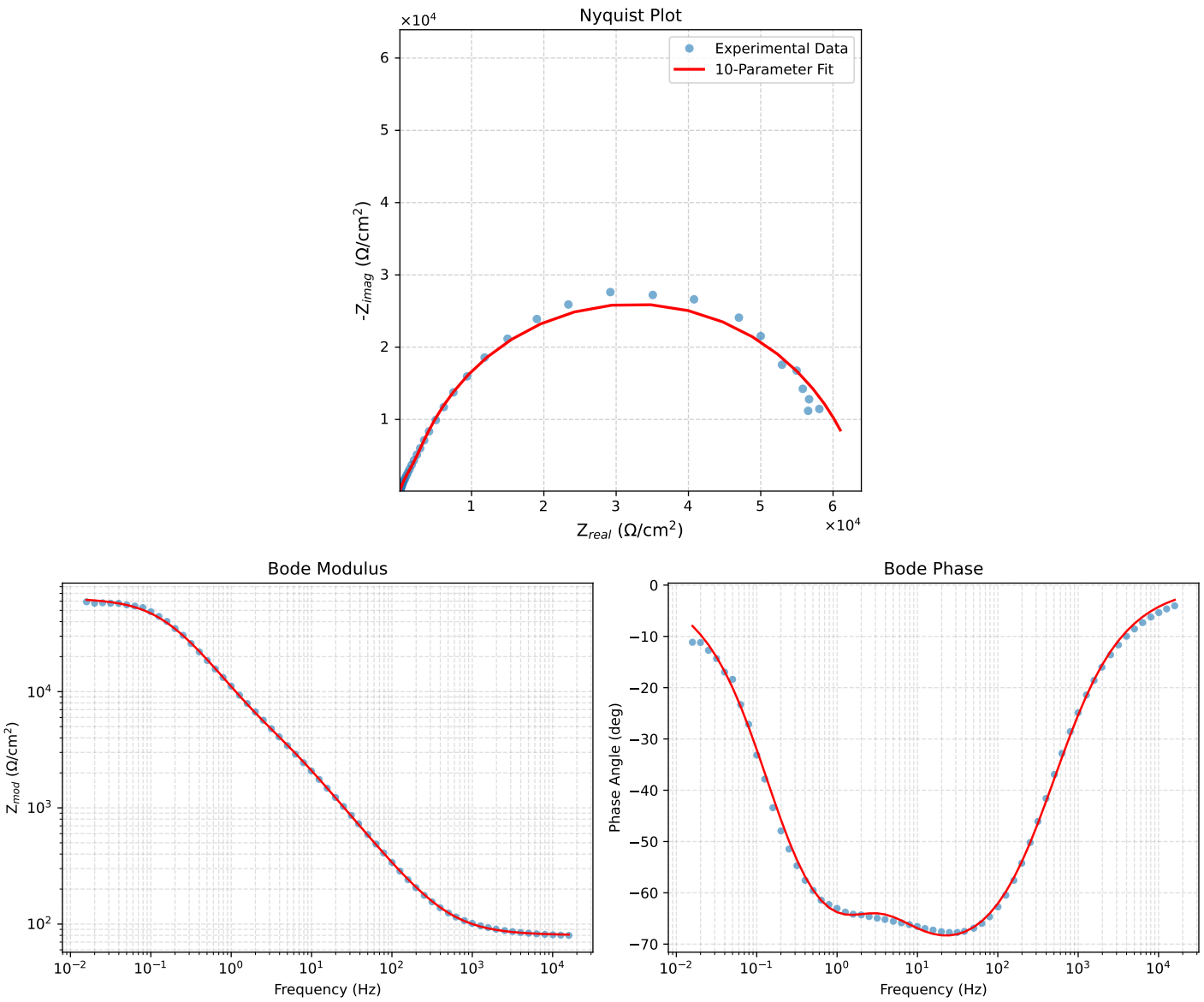

Figure 1: EIS Fit Results for Cauvel_3_BTA_24H

Analysis Results: 48H

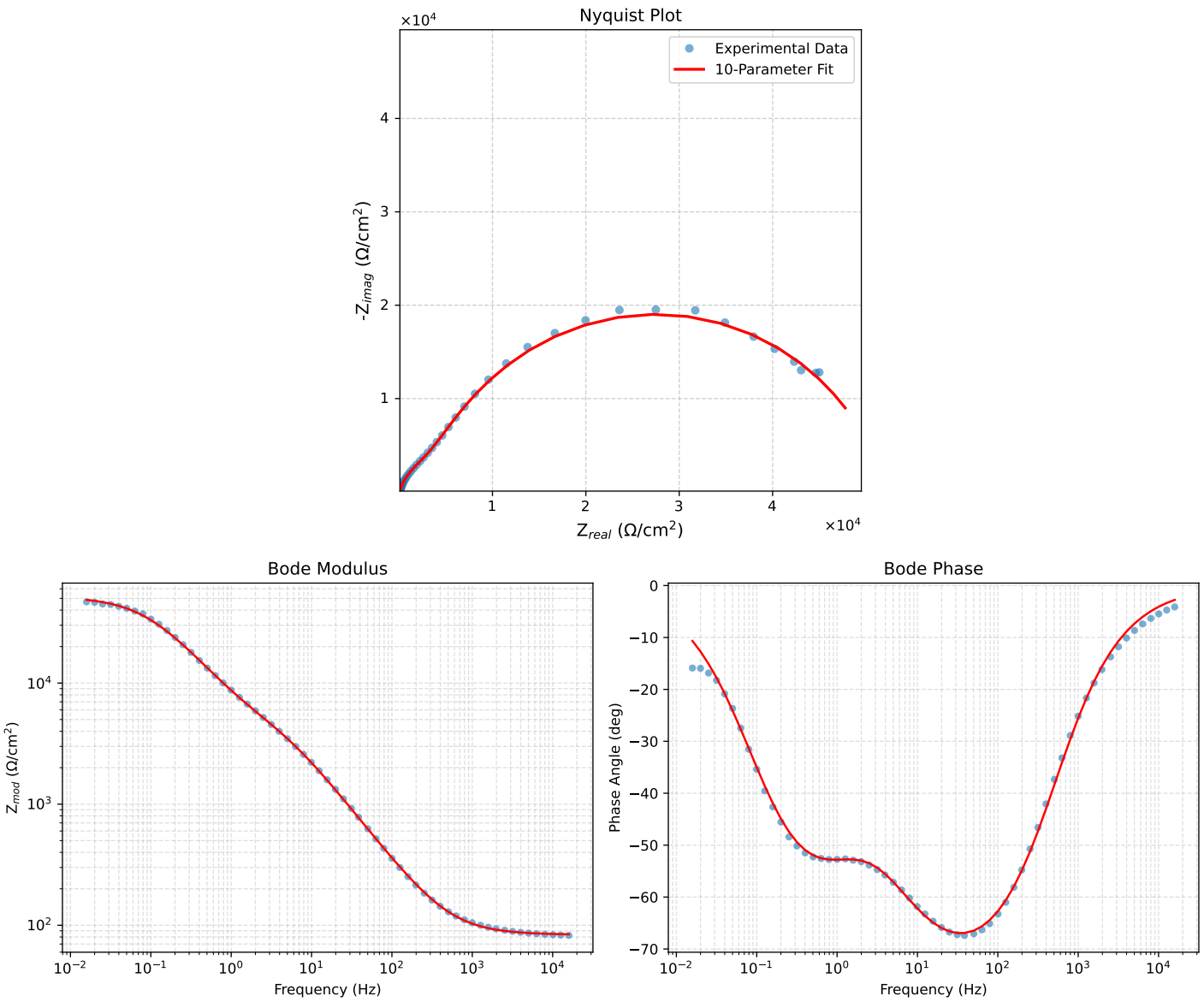

Figure 2: EIS Fit Results for Cauvel_3_BTA_48H

Analysis Results: 72H

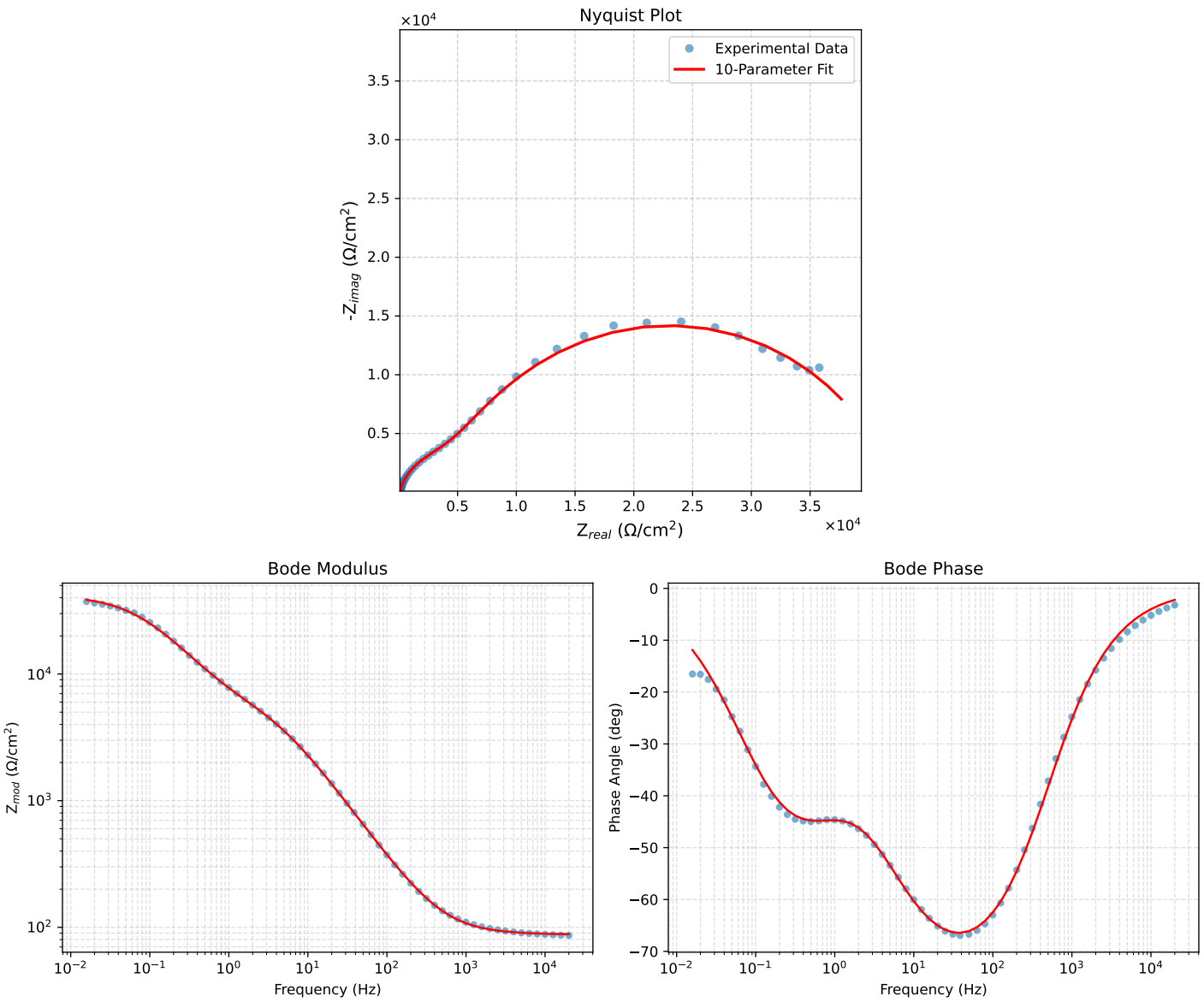

Figure 3: EIS Fit Results for Cauvel_3_BTA_72H

Analysis Results: 168H

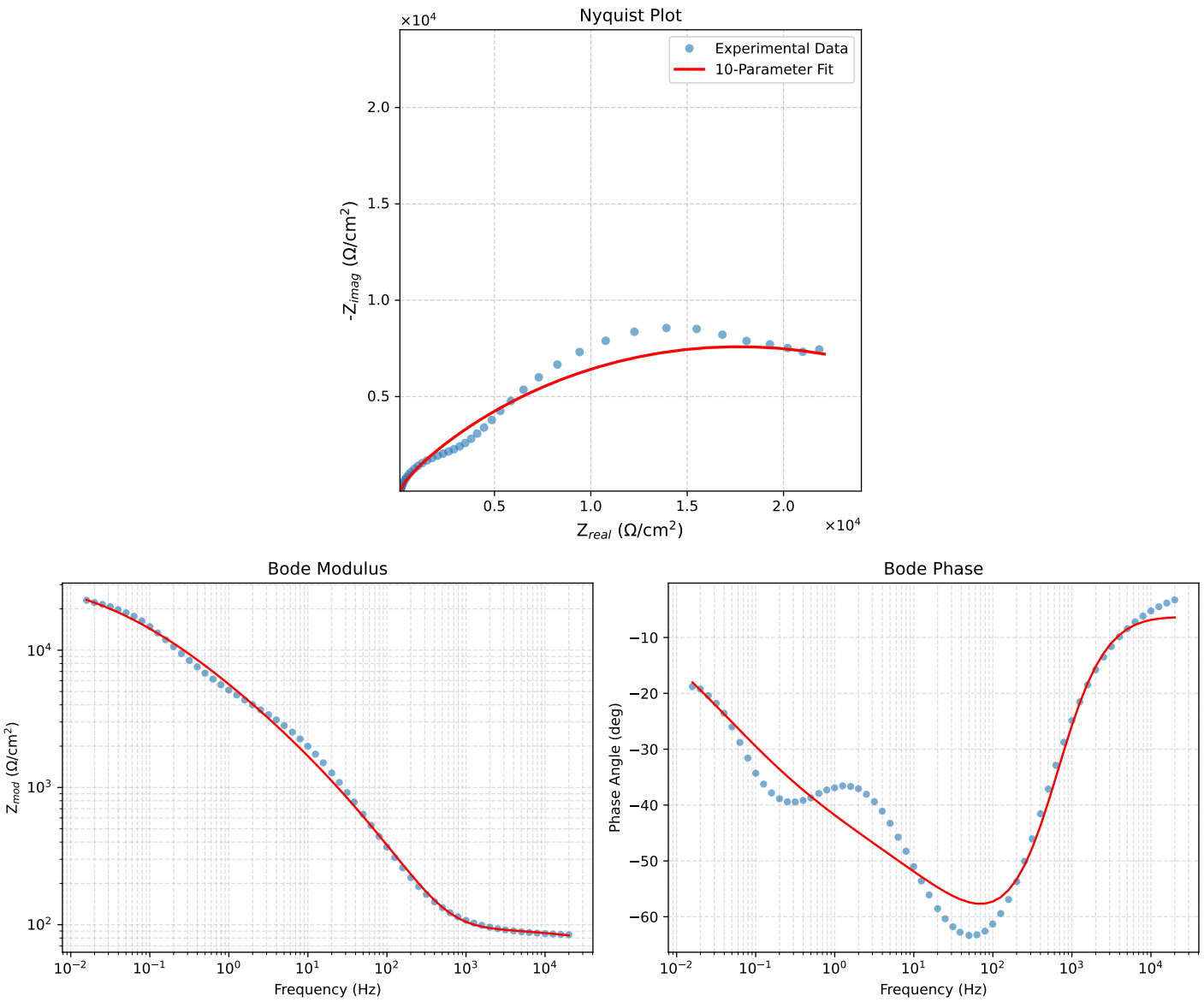

Figure 4: EIS Fit Results for Cauvel_3_BTA_168H