Comparative EIS Kinetics Report

Model Structure: `R0-p(R1-p(R2-p(R3,CPE3),CPE2),CPE1)`
Used data: altered data, first 3 points removed and points with $freq > 2e+04$ removed

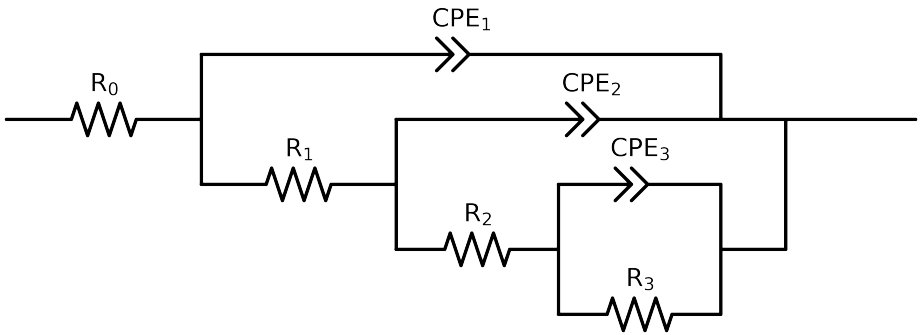

Element	Unit	Bounds	Cauvel_3_BTA_48H	Cauvel_3_BTA_72H	Cauvel_3_BTA_168H
R_0	Ω	$[1.0e-03, 1.0e+03]$	$8.31e+01 \pm 3.5e-01$	$8.51e+01 \pm 3.7e-01$	$8.55e+01 \pm 3.4e-01$
R_1	Ω	$[1.0e+00, 1.0e+08]$	$8.45e+03 \pm 4.9e+02$	$1.42e+02 \pm 4.8e+01$	$4.34e+03 \pm 5.4e+03$
R_2	Ω	$[1.0e+00, 1.0e+08]$	$1.93e+03 \pm 2.1e+03$	$7.11e+03 \pm 1.7e+02$	$1.00e+00 \pm 6.2e+03$
R_3	Ω	$[1.0e+00, 1.0e+08]$	$4.38e+04 \pm 2.1e+03$	$3.49e+04 \pm 3.9e+02$	$2.53e+04 \pm 4.8e+03$
Q_3	Ω^{-1} sec^a	$[1.0e-11, 1.0e-03]$	$7.21e-06 \pm 1.7e-05$	$3.85e-05 \pm 3.1e-07$	$5.27e-05 \pm 1.8e-04$
n_3	-	$[5.0e-01, 1.0e+00]$	$5.00e-01 \pm 7.5e-01$	$7.95e-01 \pm 6.7e-03$	$8.67e-01 \pm 8.7e-01$
Q_2	Ω^{-1} sec^a	$[1.0e-11, 1.0e-03]$	$1.73e-05 \pm 1.7e-05$	$8.88e-07 \pm 4.6e-07$	$3.16e-05 \pm 2.0e-04$
n_2	-	$[5.0e-01, 1.0e+00]$	$9.14e-01 \pm 2.0e-01$	$9.89e-01 \pm 4.6e-02$	$5.00e-01 \pm 1.2e+00$
Q_1	Ω^{-1} sec^a	$[1.0e-11, 1.0e-03]$	$1.15e-05 \pm 2.3e-07$	$9.81e-06 \pm 7.6e-07$	$1.12e-05 \pm 3.9e-07$
n_1	-	$[5.0e-01, 1.0e+00]$	$8.64e-01 \pm 2.9e-03$	$8.54e-01 \pm 6.0e-03$	$8.64e-01 \pm 4.5e-03$
χ^2	-	-	$1.828e-04$	$7.848e-05$	$1.517e-04$

Analysis Results: 48H

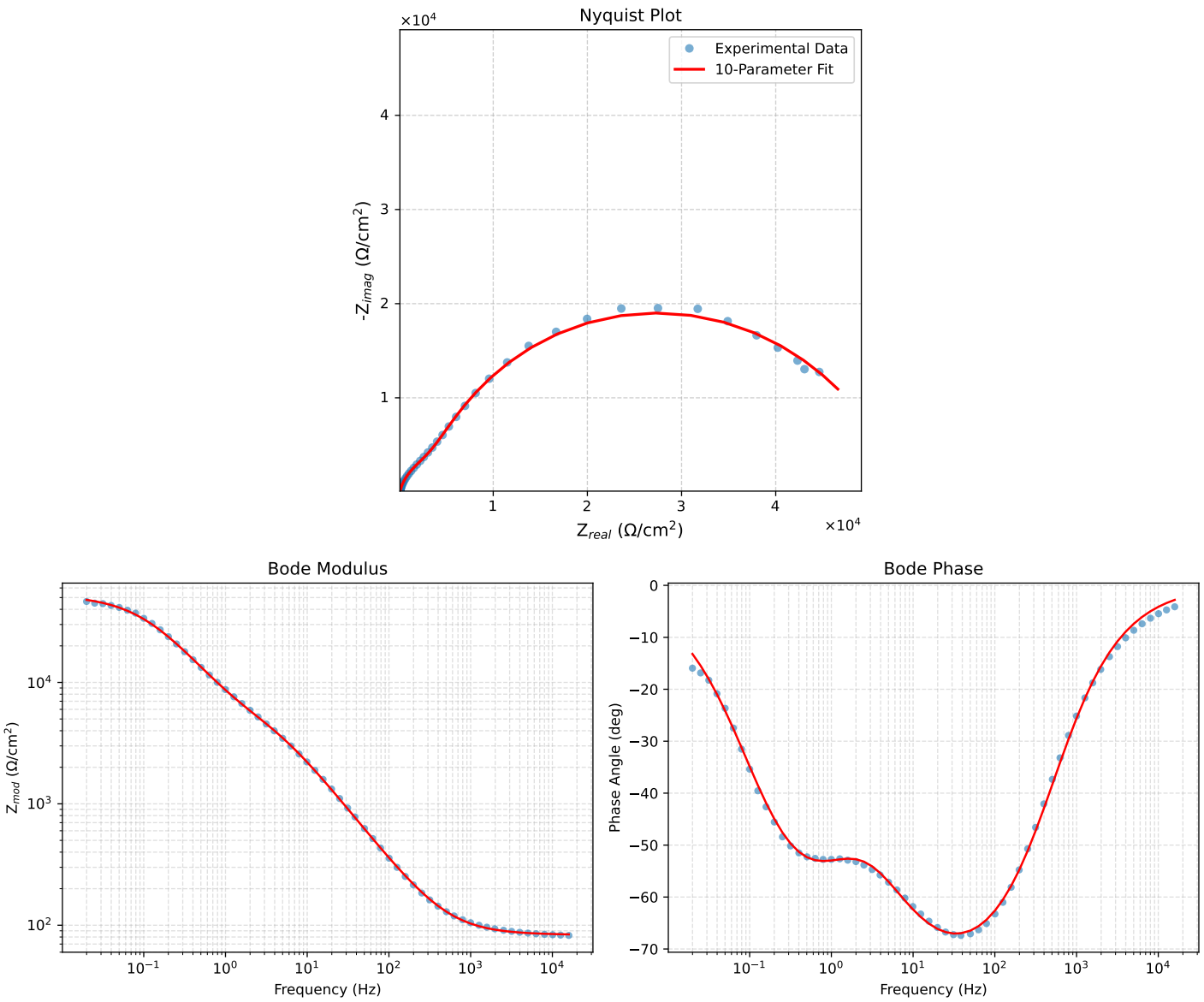

Figure 1: EIS Fit Results for Cauvel_3_BTA_48H

Analysis Results: 72H

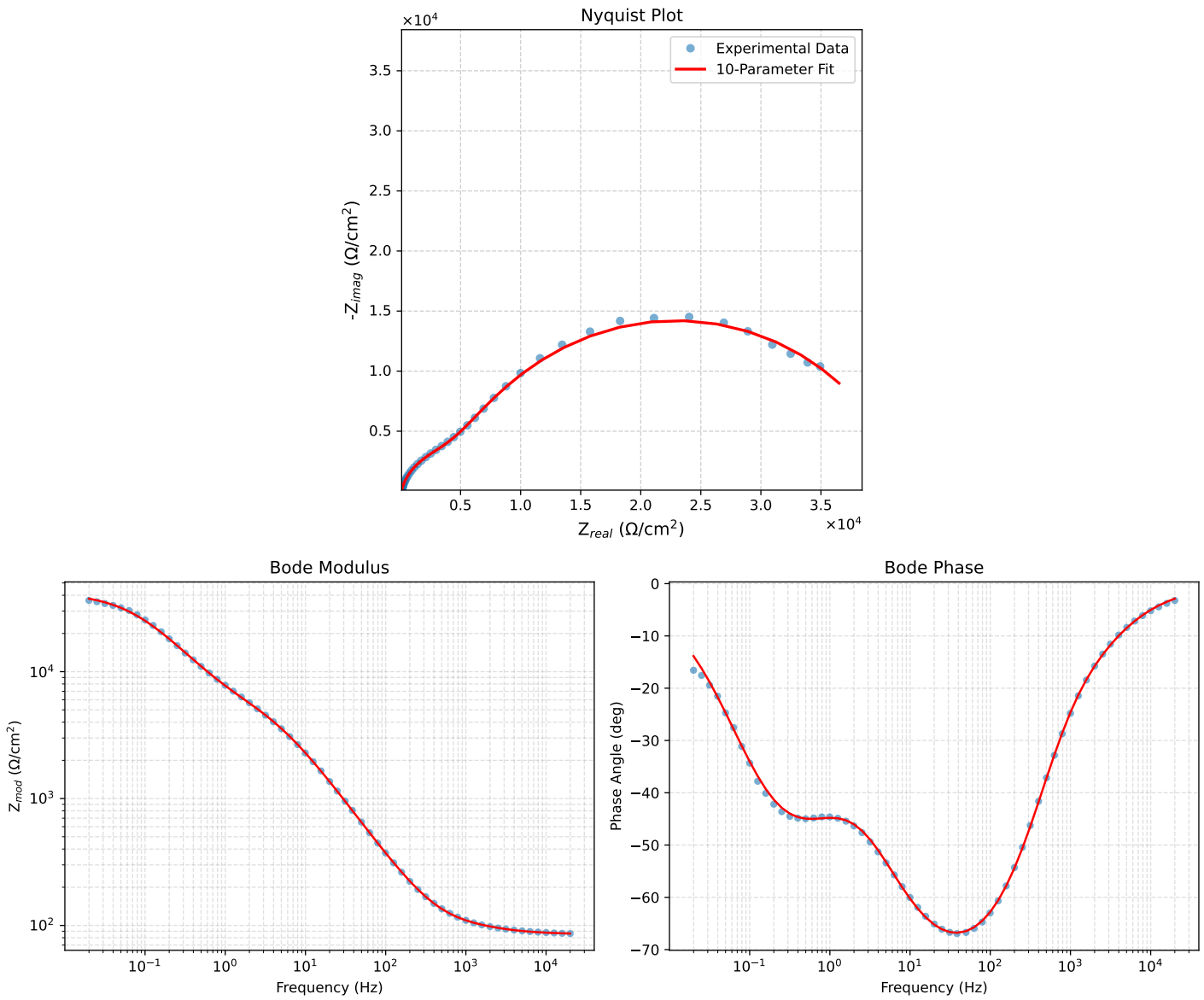

Figure 2: EIS Fit Results for Cauvel_3_BTA_72H

Analysis Results: 168H

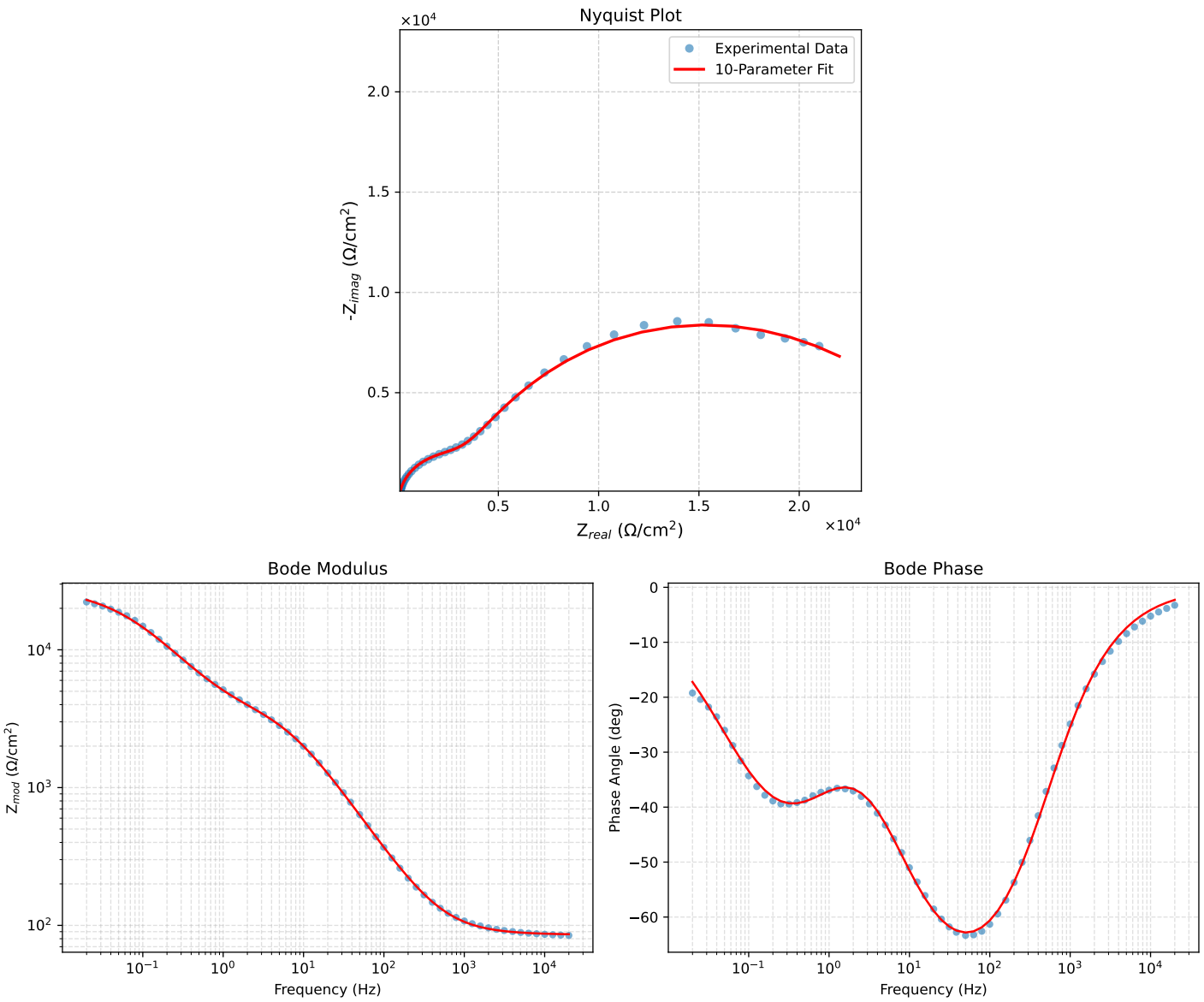

Figure 3: EIS Fit Results for Cauvel_3_BTA_168H