Comparative EIS Kinetics Report

Model Structure: `R0-p(R1-p(R2,CPE2),CPE1)`
Used data: original data

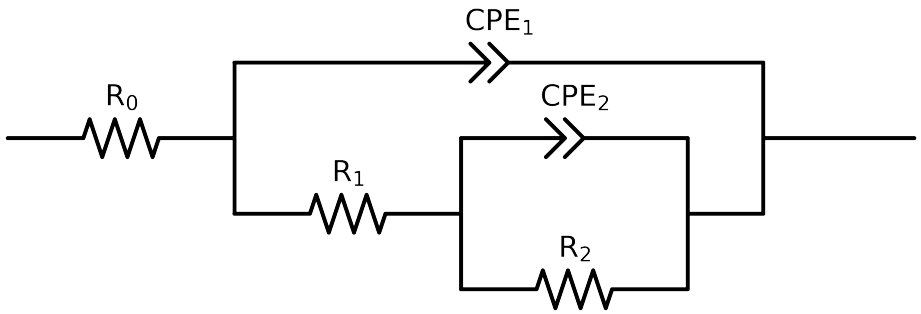

Element	Unit	Bounds	Cauvel_3_BTA_1H	Cauvel_3_BTA_4H	Cauvel_3_BTA_8H
R_0	Ω	$[1.0e-03, 1.0e+03]$	$7.69e+01 \pm 2.4e+00$	$7.52e+01 \pm 7.4e-01$	$7.53e+01 \pm 5.4e-01$
R_1	Ω	$[1.0e+00, 1.0e+08]$	$5.01e+04 \pm 1.4e+03$	$7.74e+04 \pm 5.7e+02$	$6.07e+04 \pm 3.4e+04$
R_2	Ω	$[1.0e+00, 1.0e+08]$	$1.38e+02 \pm 1.4e+03$	$3.90e+02 \pm 5.7e+02$	$1.80e+04 \pm 3.4e+04$
Q_2	Ω^{-1} sec^a	$[1.0e-11, 1.0e-03]$	$1.04e-11 \pm 3.1e-01$	$1.05e-11 \pm 7.4e-02$	$4.32e-06 \pm 8.8e-06$
n_2	-	$[5.0e-01, 1.0e+00]$	$5.30e-01 \pm 0.0e+00$	$9.80e-01 \pm 8.9e-14$	$1.00e+00 \pm 5.3e-01$
Q_1	Ω^{-1} sec^a	$[1.0e-11, 1.0e-03]$	$9.43e-06 \pm 1.3e-06$	$1.07e-05 \pm 1.7e-06$	$1.18e-05 \pm 4.5e-07$
n_1	-	$[5.0e-01, 1.0e+00]$	$9.25e-01 \pm 2.1e-02$	$8.95e-01 \pm 2.2e-02$	$8.73e-01 \pm 5.7e-03$
χ^2	-	-	$2.072e-02$	$2.059e-03$	$9.687e-04$

Analysis Results: 1H

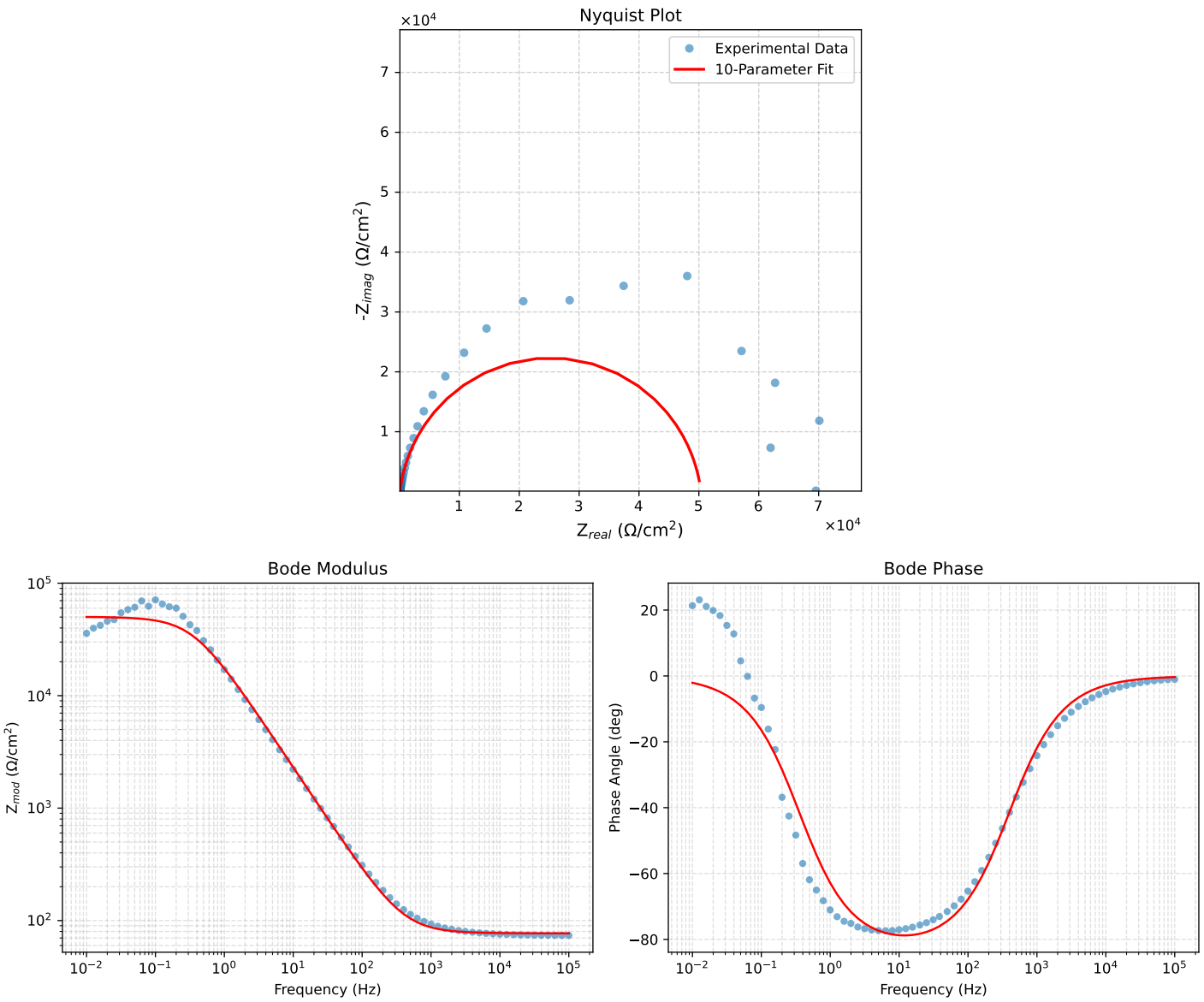

Figure 1: EIS Fit Results for Cauvel_3_BTA_1H

Analysis Results: 4H

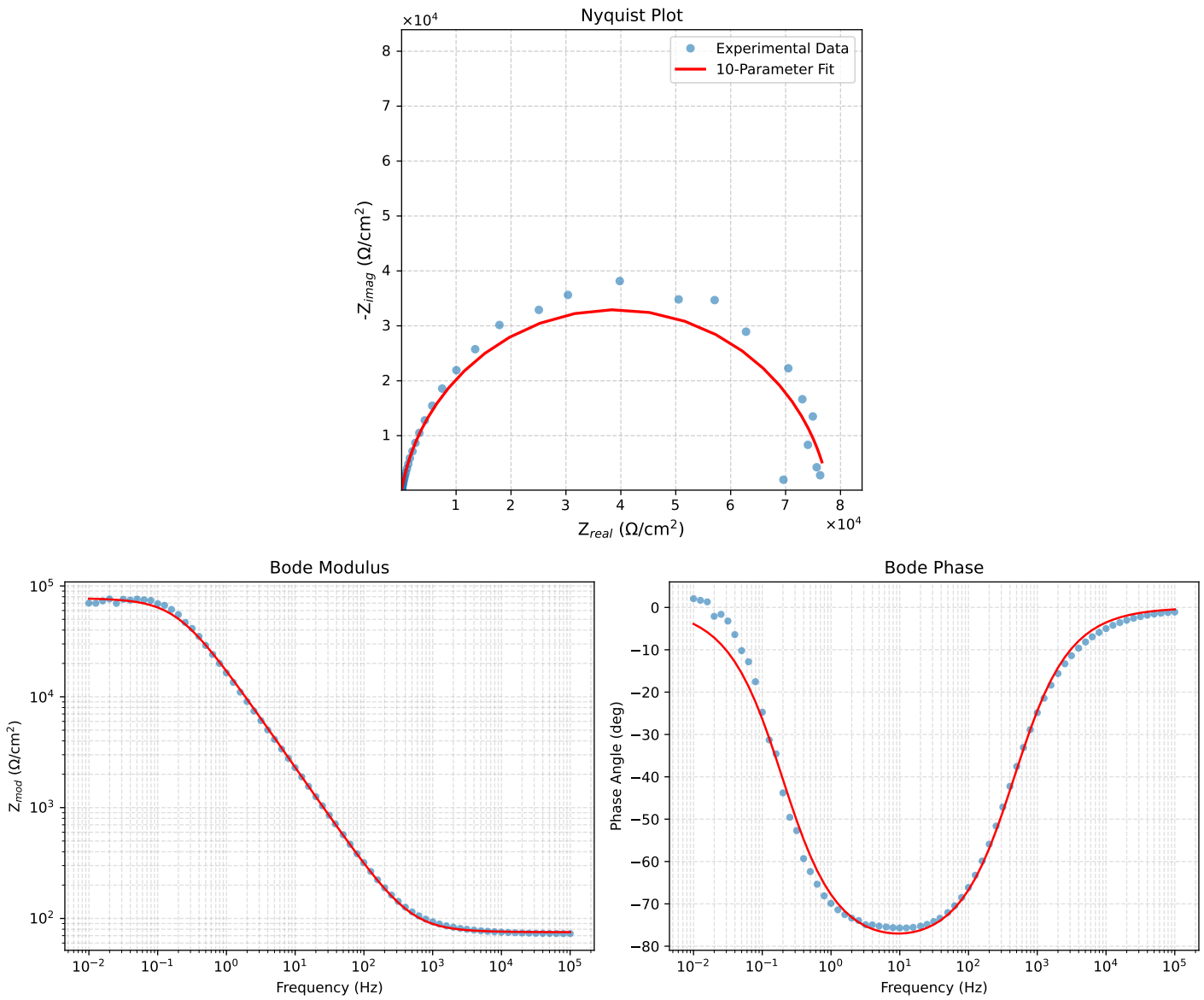

Figure 2: EIS Fit Results for Cauvel_3_BTA_4H

Analysis Results: 8H

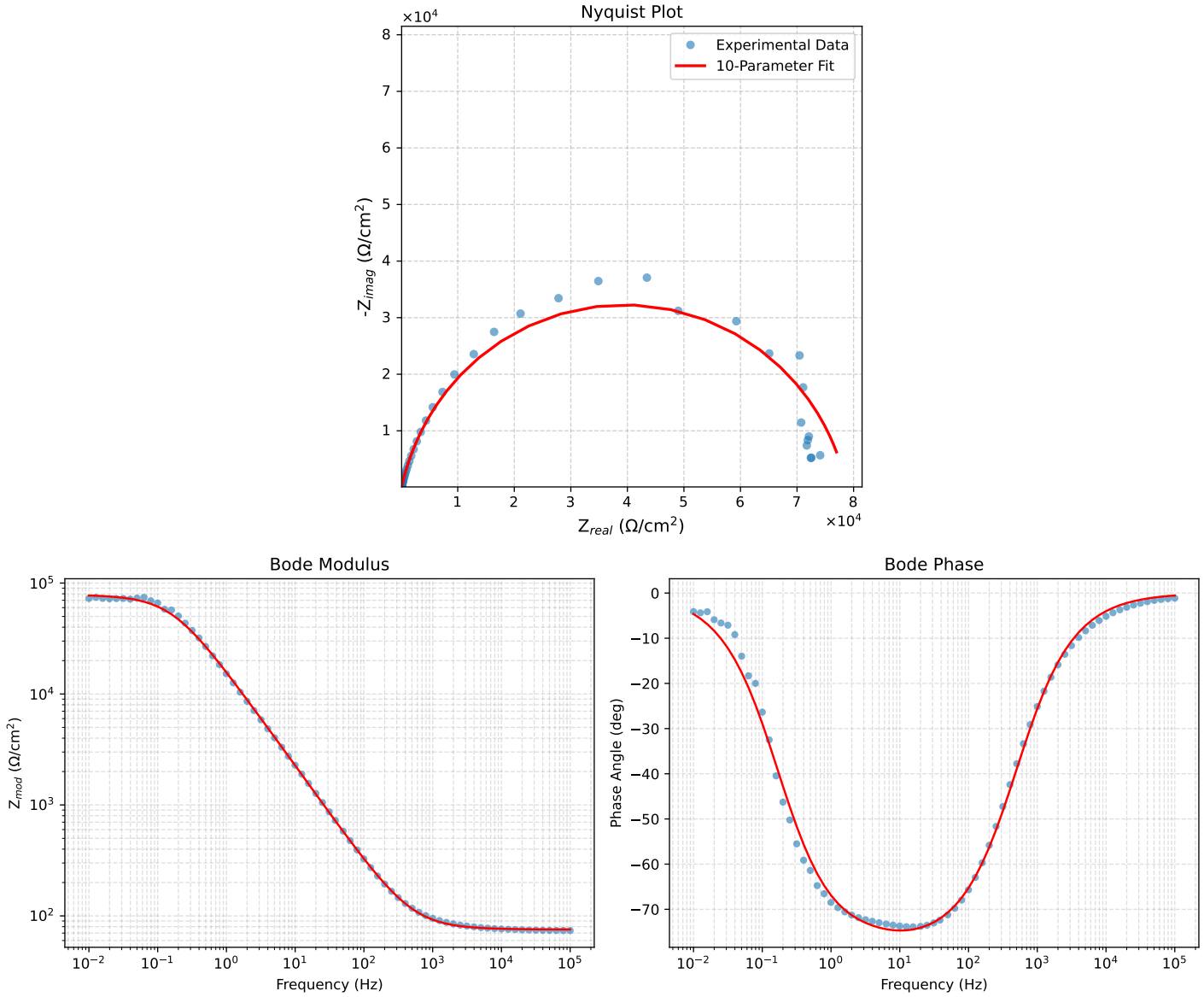

Figure 3: EIS Fit Results for Cauvel_3_BTA_8H