Comparative EIS Kinetics Report

Model Structure: `R0-p(R1-p(R2,CPE2),CPE1)`
Used data: altered data, first 3 points removed and points with $freq > 1e+04$ and $freq < 1e-03$ removed

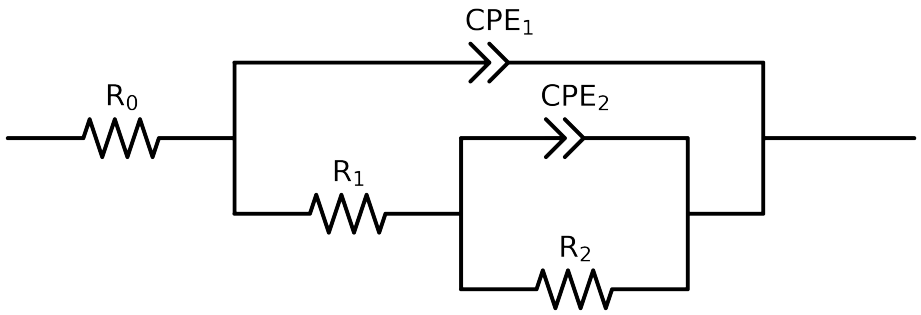

Element	Unit	Bounds	Cauvel_1_Lcystine_8H	Cauvel_1_Lcystine_24H	Cauvel_1_Lcystine_48H	Cauvel_1_Lcystine_72H	Cauvel_1_Lcystine_168H
R_0	Ω	$[1.0e-03, 1.0e+03]$	$7.68e+01 \pm 7.6e-01$	$7.95e+01 \pm 2.0e+02$	$8.21e+01 \pm 3.4e-01$	$7.72e+01 \pm 8.3e-01$	$8.62e+01 \pm 5.5e-01$
R_1	Ω	$[1.0e+00, 1.0e+08]$	$2.16e+02 \pm 3.0e+02$	$3.39e+01 \pm 2.3e+03$	$2.43e+05 \pm 3.3e+03$	$2.01e+02 \pm 8.4e+01$	$1.09e+05 \pm 1.9e+04$
R_2	Ω	$[1.0e+00, 1.0e+12]$	$2.18e+05 \pm 2.2e+03$	$3.19e+05 \pm 2.4e+03$	$1.71e+11 \pm 8.1e-07$	$3.16e+05 \pm 2.2e+03$	$2.81e+05 \pm 2.0e+04$
Q_2	Ω^{-1} sec^a	$[1.0e-11, 1.0e-03]$	$2.35e-06 \pm 4.7e-06$	$1.00e-11 \pm 4.0e-02$	$6.00e-04 \pm 2.9e-04$	$5.31e-07 \pm 2.6e-07$	$1.75e-06 \pm 1.5e-07$
n_2	-	$[5.0e-01, 1.0e+00]$	$8.73e-01 \pm 1.5e-01$	$8.62e-01 \pm 3.3e+05$	$1.00e+00 \pm 2.3e-01$	$1.00e+00 \pm 3.5e-02$	$1.00e+00 \pm 5.6e-02$
Q_1	Ω^{-1} sec^a	$[1.0e-11, 1.0e-03]$	$6.97e-06 \pm 4.7e-06$	$1.01e-05 \pm 4.0e-02$	$1.00e-05 \pm 4.0e-08$	$9.50e-06 \pm 2.7e-07$	$9.02e-06 \pm 1.4e-07$
n_1	-	$[5.0e-01, 1.0e+00]$	$8.93e-01 \pm 6.1e-02$	$8.61e-01 \pm 1.1e+00$	$8.50e-01 \pm 8.0e-04$	$8.27e-01 \pm 3.4e-03$	$8.46e-01 \pm 2.4e-03$
χ^2	-	-	$2.809e-04$	$3.538e-04$	$1.500e-04$	$1.238e-04$	$2.864e-04$

Analysis Results: 8H

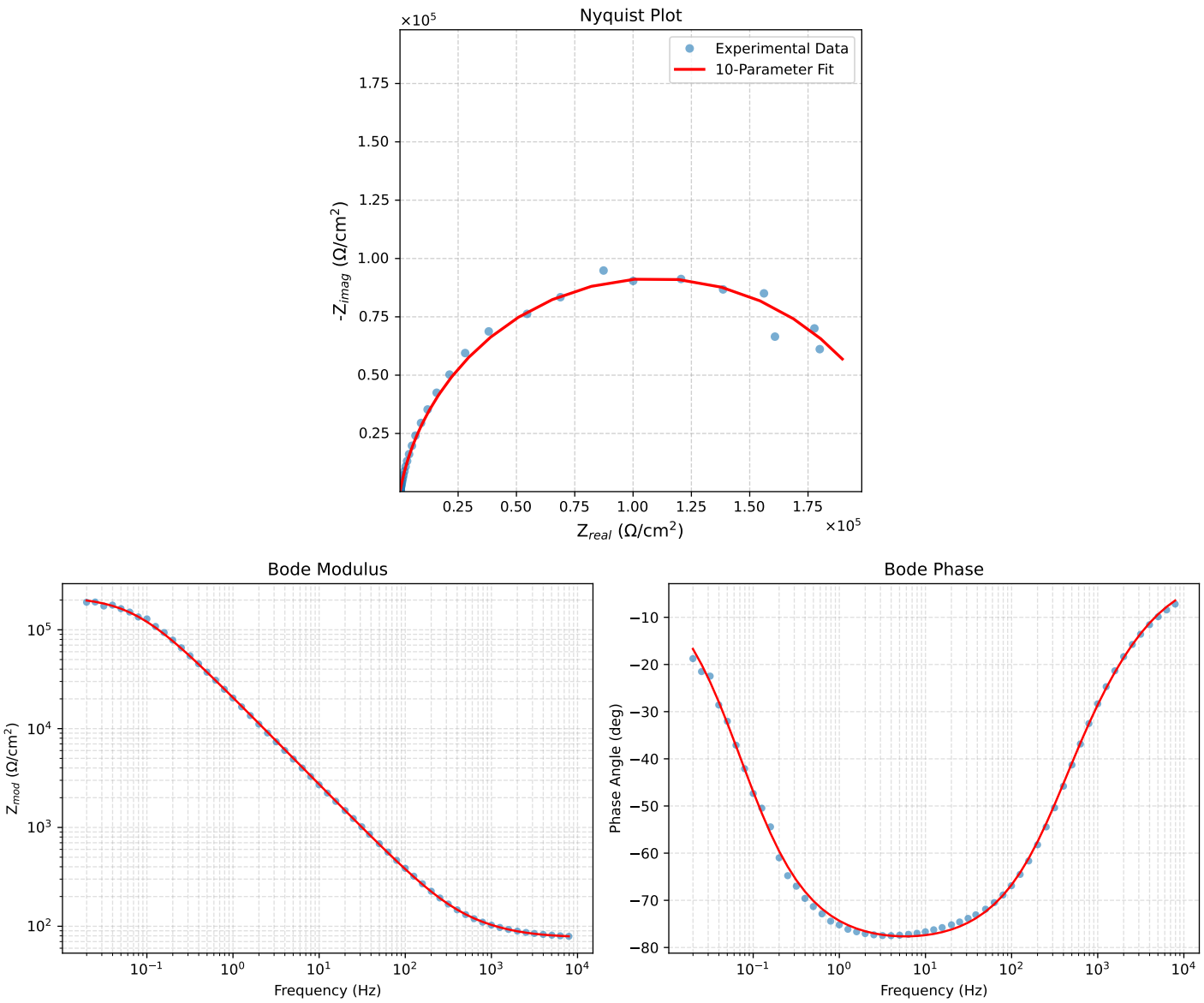

Figure 1: EIS Fit Results for Cauvel_1_Lcystine_8H

Analysis Results: 24H

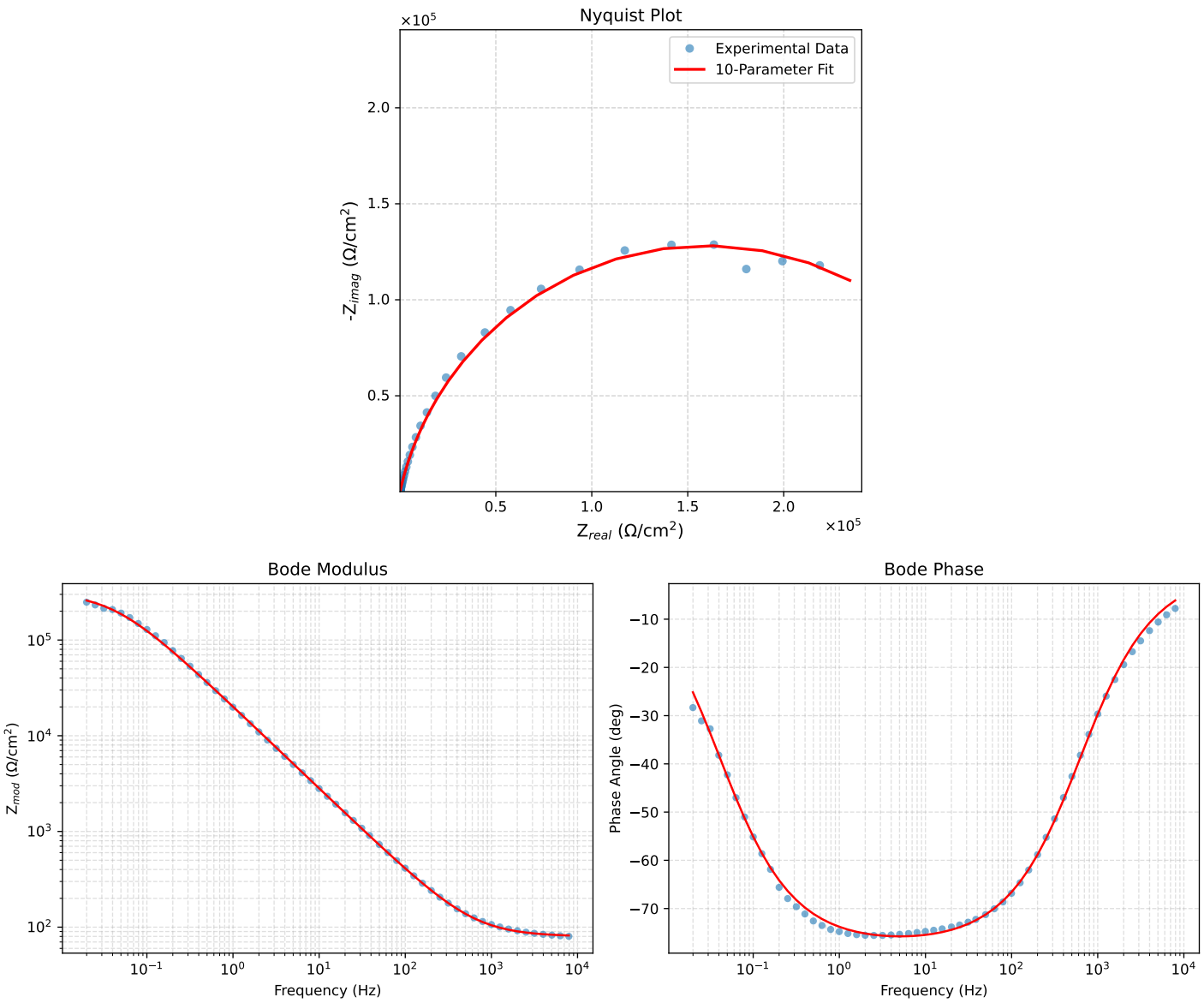

Figure 2: EIS Fit Results for Cauvel_1_Lcystine_24H

Analysis Results: 48H

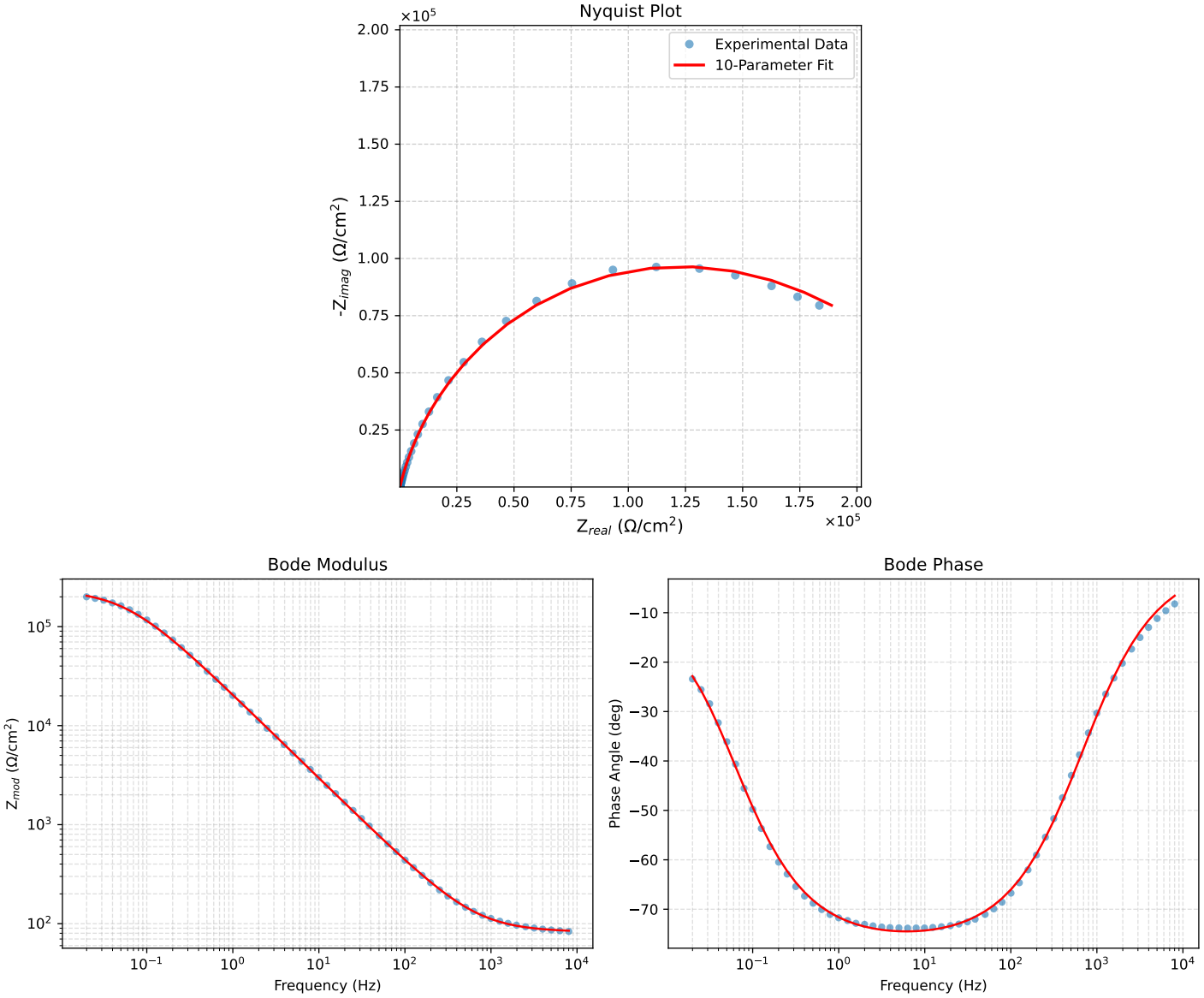

Figure 3: EIS Fit Results for Cauvel_1_Lcystine_48H

Analysis Results: 72H

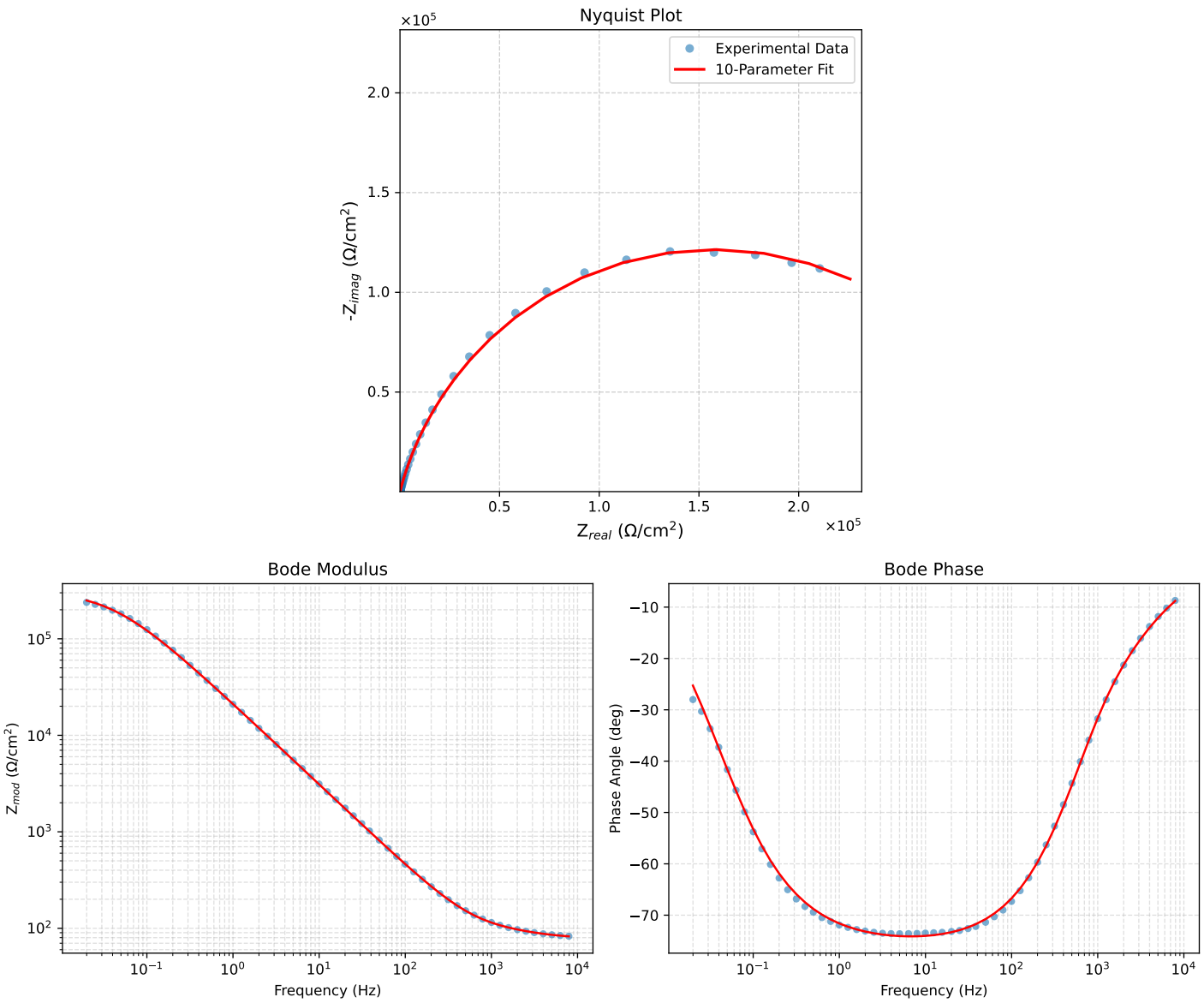

Figure 4: EIS Fit Results for Cauvel_1_Lcystine_72H

Analysis Results: 168H

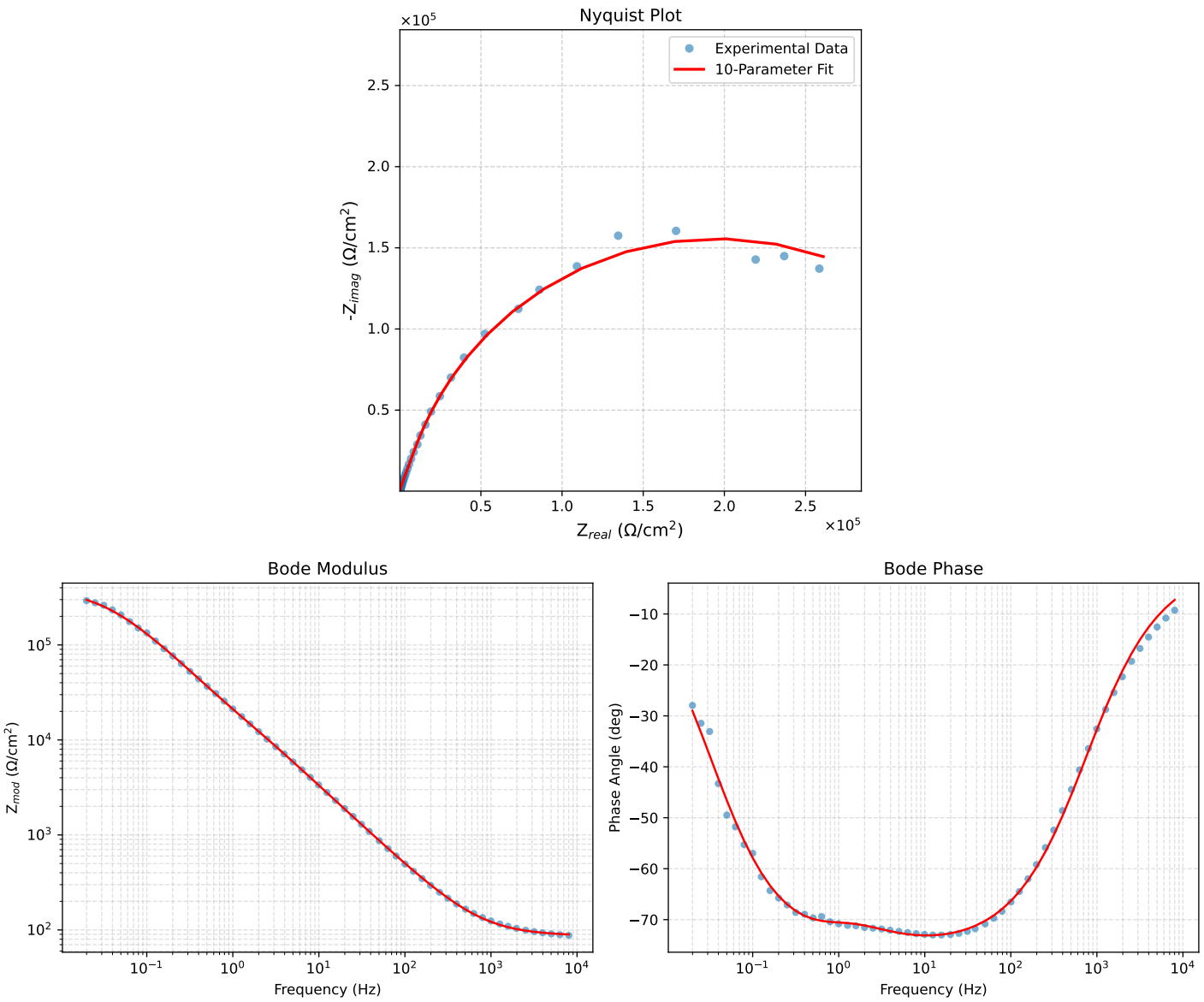

Figure 5: EIS Fit Results for Cauvel_1_Lcystine_168H