Comparative EIS Kinetics Report

Model Structure: `R0-p(R1-p(R2,CPE2),CPE1)`
Used data: altered data, first 3 points removed and points with $freq > 1e+04$ and $freq < 1e-03$ removed

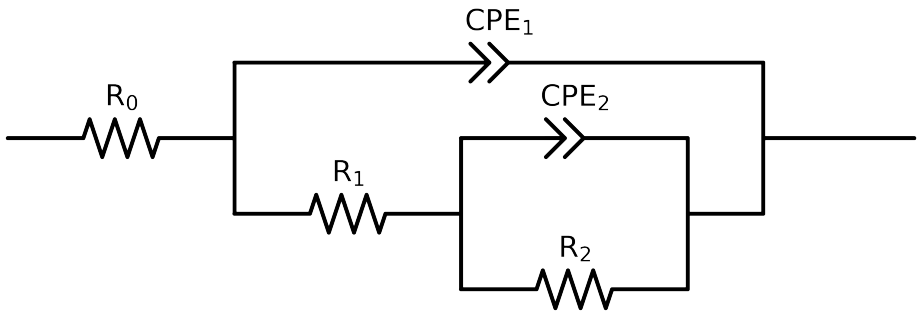

Element	Unit	Bounds	Cauvel_1_Lcystine_8H	Cauvel_1_Lcystine_24H	Cauvel_1_Lcystine_48H	Cauvel_1_Lcystine_72H	Cauvel_1_Lcystine_168H
R_0	Ω	$[1.0e-03, 1.0e+03]$	$4.06e-01 \pm 8.2e+02$	$7.98e+01 \pm 5.8e-01$	$8.21e+01 \pm 3.4e-01$	$1.00e-03 \pm 6.4e+01$	$7.98e+01 \pm 3.0e+00$
R_1	Ω	$[1.0e+00, 1.0e+08]$	$8.15e+01 \pm 8.0e+02$	$2.88e+04 \pm 2.6e+04$	$2.42e+05 \pm 3.8e+03$	$8.47e+01 \pm 6.3e+01$	$9.23e+01 \pm 1.0e+02$
R_2	Ω	$[1.0e+00, 1.0e+12]$	$2.20e+05 \pm 2.1e+03$	$2.84e+05 \pm 2.6e+04$	$3.17e+11 \pm 5.2e-07$	$3.22e+05 \pm 5.2e+03$	$4.15e+05 \pm 7.1e+03$
Q_2	Ω^{-1} sec^a	$[1.0e-11, 1.0e-03]$	$9.30e-06 \pm 1.5e-06$	$6.26e-07 \pm 4.9e-07$	$5.29e-04 \pm 3.3e-04$	$9.09e-06 \pm 4.8e-07$	$1.61e-06 \pm 1.7e-06$
n_2	-	$[5.0e-01, 9.0e-01]$	$8.84e-01 \pm 4.3e-03$	$9.00e-01 \pm 1.3e-01$	$9.00e-01 \pm 2.7e-01$	$8.54e-01 \pm 4.2e-03$	$9.00e-01 \pm 4.9e-02$
Q_1	Ω^{-1} sec^a	$[1.0e-11, 1.0e-03]$	$1.05e-07 \pm 1.5e-06$	$9.45e-06 \pm 4.9e-07$	$1.00e-05 \pm 4.2e-08$	$9.89e-07 \pm 4.6e-07$	$8.27e-06 \pm 1.7e-06$
n_1	-	$[5.0e-01, 1.0e+00]$	$8.32e-01 \pm 6.5e-01$	$8.69e-01 \pm 6.7e-03$	$8.50e-01 \pm 8.4e-04$	$6.13e-01 \pm 1.0e-01$	$8.16e-01 \pm 9.3e-03$
χ^2	-	-	$4.015e-04$	$2.992e-04$	$1.559e-04$	$1.539e-04$	$4.601e-04$

Analysis Results: 8H

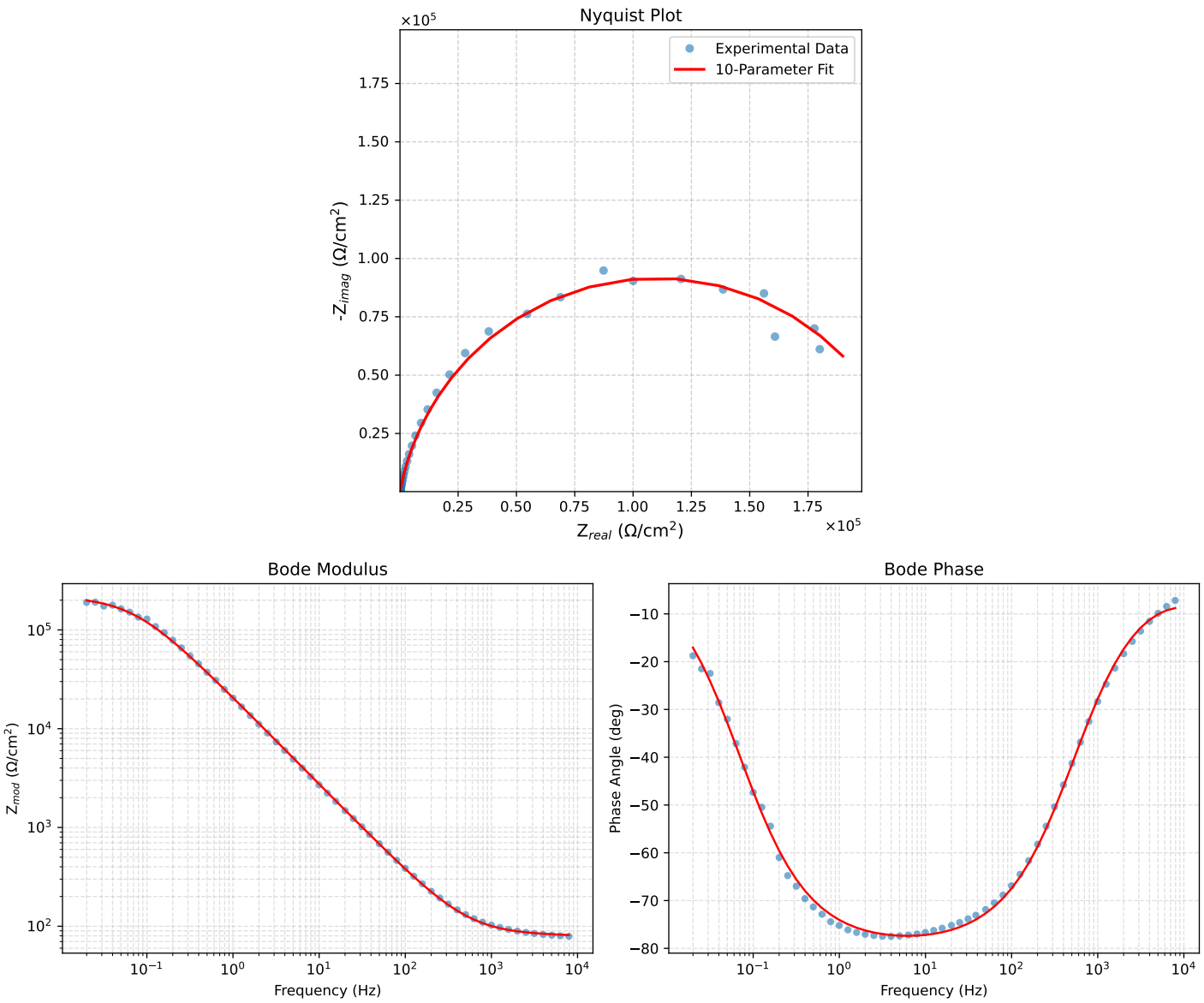

Figure 1: EIS Fit Results for Cauvel_1_Lcystine_8H

Analysis Results: 24H

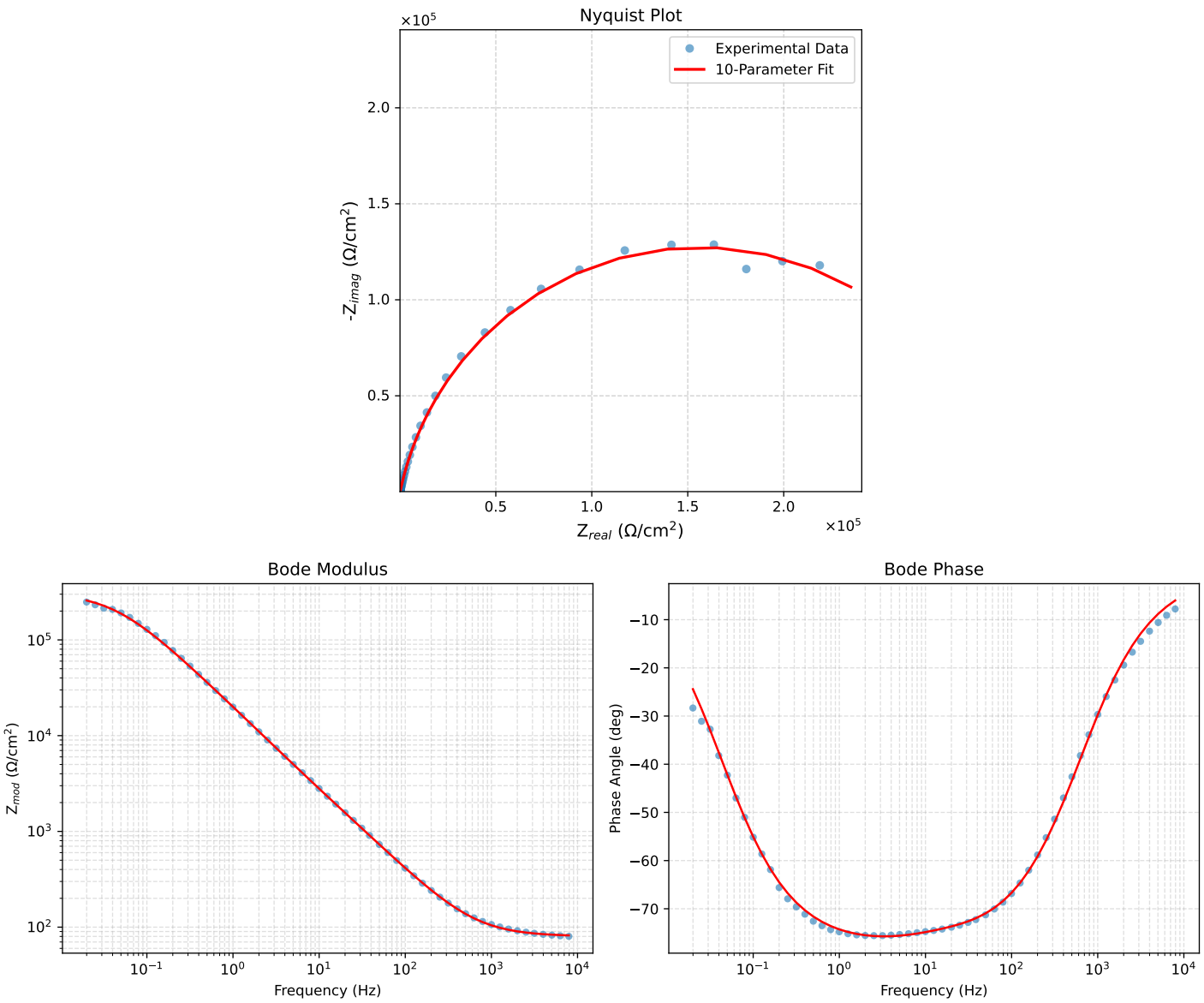

Figure 2: EIS Fit Results for Cauvel_1_Lcystine_24H

Analysis Results: 48H

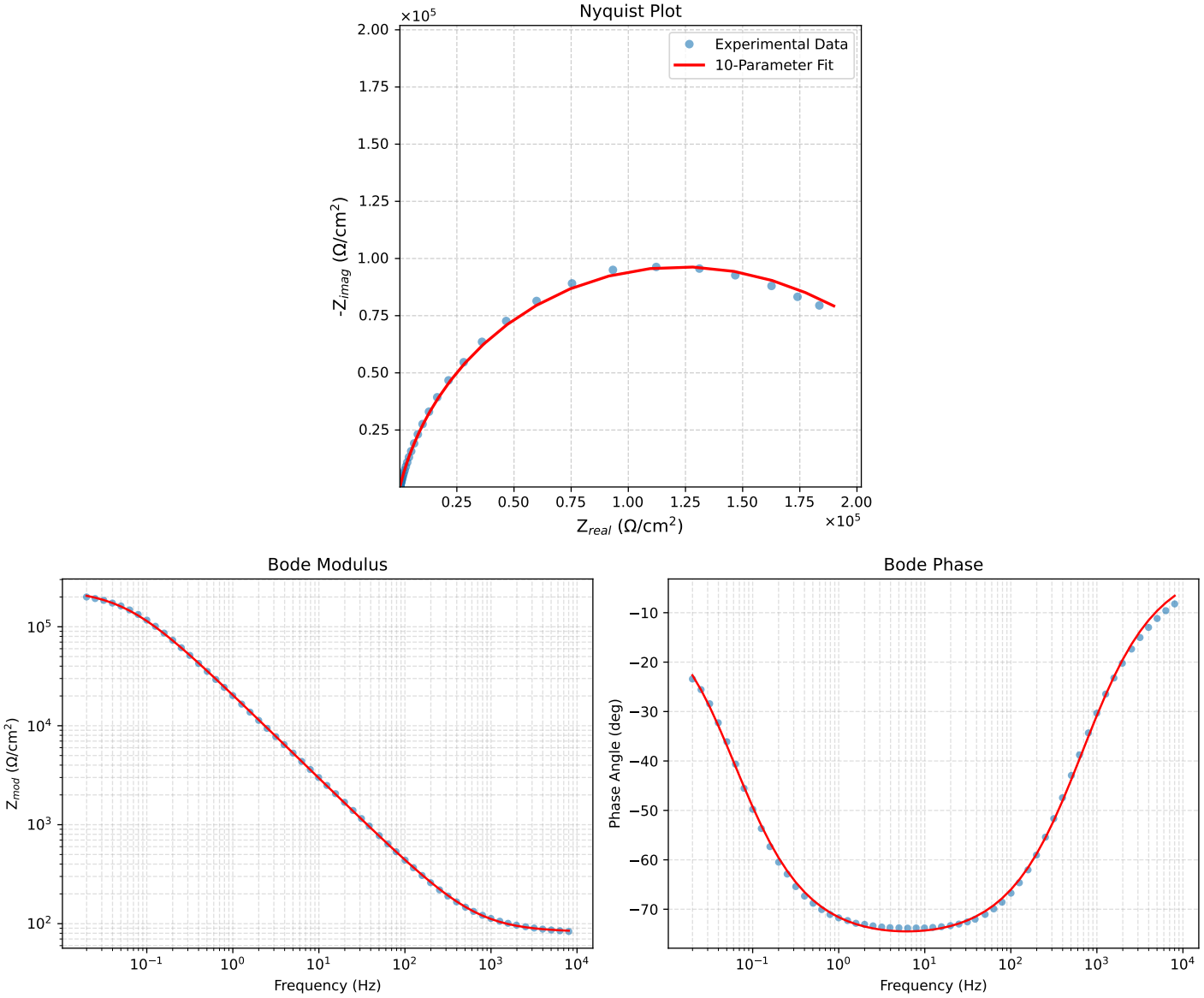

Figure 3: EIS Fit Results for Cauvel_1_Lcystine_48H

Analysis Results: 72H

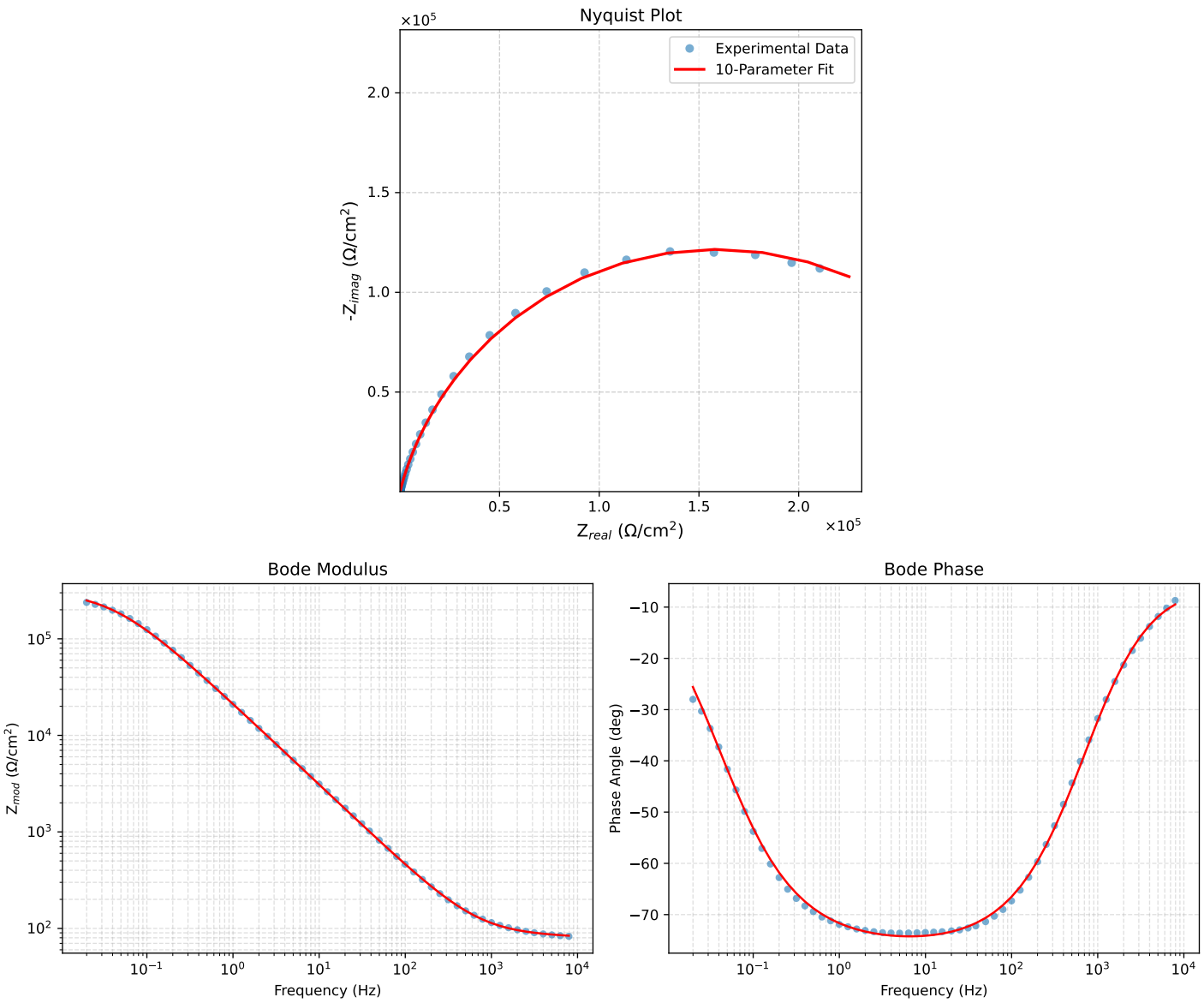

Figure 4: EIS Fit Results for Cauvel_1_Lcystine_72H

Analysis Results: 168H

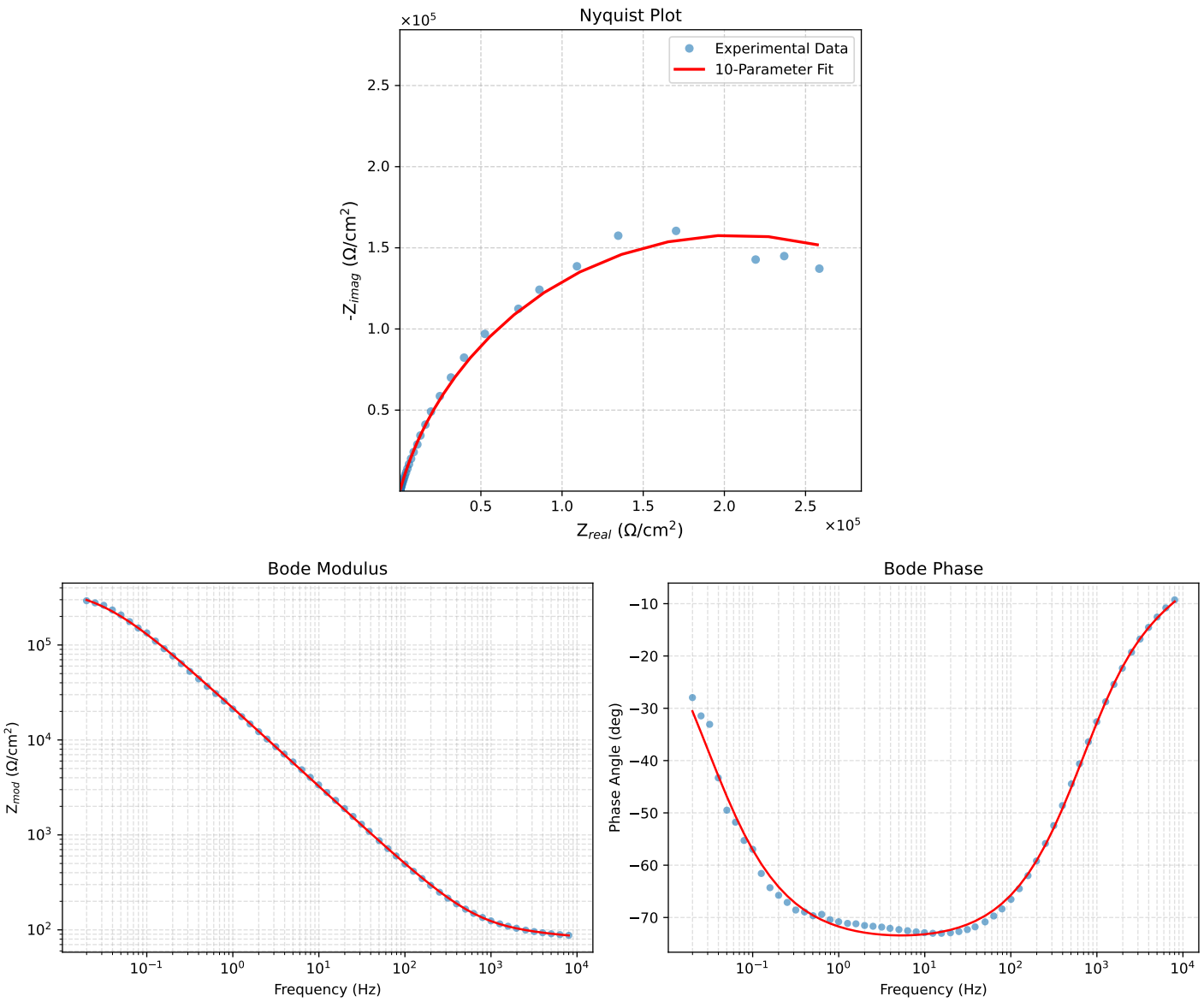

Figure 5: EIS Fit Results for Cauvel_1_Lcystine_168H