Comparative EIS Kinetics Report

Model Structure: `R0-p(R1-p(R2-p(R3,CPE3),CPE2),CPE1)`
Used data: altered data, first 3 points removed and points with $freq > 1e+04$ and $freq < 1e-03$ removed

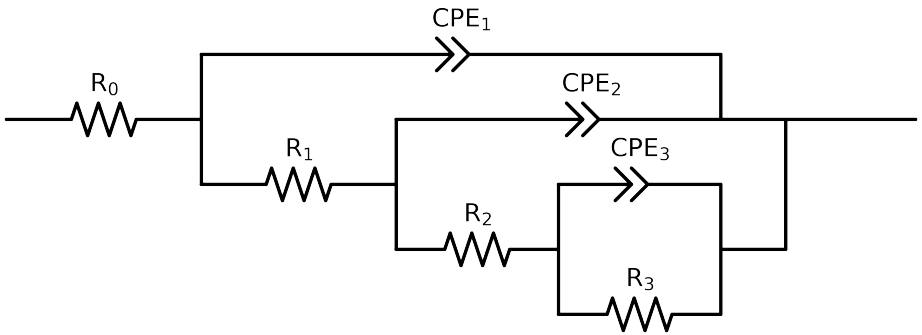

Element	Unit	Bounds	Cauvel_1_Lcystine_8H	Cauvel_1_Lcystine_24H	Cauvel_1_Lcystine_48H	Cauvel_1_Lcystine_72H	Cauvel_1_Lcystine_168H
R_0	Ω	$[1.0e-03, 1.0e+03]$	$7.68e+01 \pm 7.8e-01$	$7.96e+01 \pm 4.6e-01$	$7.83e+01 \pm 9.9e-01$	$8.08e+01 \pm 3.5e-01$	$1.14e-02 \pm 5.9e+04$
R_1	Ω	$[1.0e+00, 1.0e+08]$	$2.15e+02 \pm 3.1e+02$	$3.18e+05 \pm 7.3e+03$	$1.05e+02 \pm 5.7e+01$	$3.06e+05 \pm 6.6e+04$	$8.22e+01 \pm 5.9e+04$
R_2	Ω	$[1.0e+00, 1.0e+08]$	$2.18e+05 \pm 1.4e+03$	$7.00e+07 \pm 9.6e-05$	$2.44e+05 \pm 3.5e+03$	$4.83e+02 \pm 6.6e+04$	$3.50e+02 \pm 1.1e+03$
R_3	Ω	$[1.0e+00, 1.0e+08]$	$1.15e+02 \pm 1.4e+03$	$7.98e+01 \pm 1.1e-06$	$1.00e+08 \pm 1.8e-05$	$1.00e+08 \pm 1.5e-02$	$4.17e+05 \pm 9.0e+03$
Q_3	Ω^{-1} sec^a	$[1.0e-11, 1.0e-03]$	$1.74e-09 \pm 1.2e+00$	$2.48e-06 \pm 7.2e-09$	$6.28e-04 \pm 3.2e-04$	$3.17e-04 \pm 4.2e-02$	$3.58e-07 \pm 1.4e-06$
n_3	-	$[5.0e-01, 1.0e+00]$	$6.32e-01 \pm 9.6e-11$	$8.92e-01 \pm 8.1e-13$	$1.00e+00 \pm 2.3e-01$	$1.00e+00 \pm 1.9e-01$	$1.00e+00 \pm 2.3e-01$
Q_2	Ω^{-1} sec^a	$[1.0e-11, 1.0e-03]$	$2.35e-06 \pm 4.9e-06$	$4.00e-04 \pm 2.8e-04$	$1.43e-06 \pm 7.3e-07$	$1.00e-11 \pm 4.2e-02$	$9.54e-06 \pm 1.1e-05$
n_2	-	$[5.0e-01, 1.0e+00]$	$8.72e-01 \pm 1.6e-01$	$1.00e+00 \pm 3.3e-01$	$9.14e-01 \pm 2.7e-02$	$1.00e+00 \pm 1.4e+02$	$8.21e-01 \pm 4.7e-02$
Q_1	Ω^{-1} sec^a	$[1.0e-11, 1.0e-03]$	$6.97e-06 \pm 4.8e-06$	$9.98e-06 \pm 5.5e-08$	$8.63e-06 \pm 7.5e-07$	$9.84e-06 \pm 7.9e-08$	$1.04e-08 \pm 1.1e-05$
n_1	-	$[5.0e-01, 1.0e+00]$	$8.93e-01 \pm 6.2e-02$	$8.63e-01 \pm 1.1e-03$	$8.37e-01 \pm 3.6e-03$	$8.45e-01 \pm 3.4e-03$	$8.17e-01 \pm 3.7e+01$
χ^2	-	-	$2.890e-04$	$3.148e-04$	$1.009e-04$	$1.483e-04$	$4.557e-04$

Analysis Results: 8H

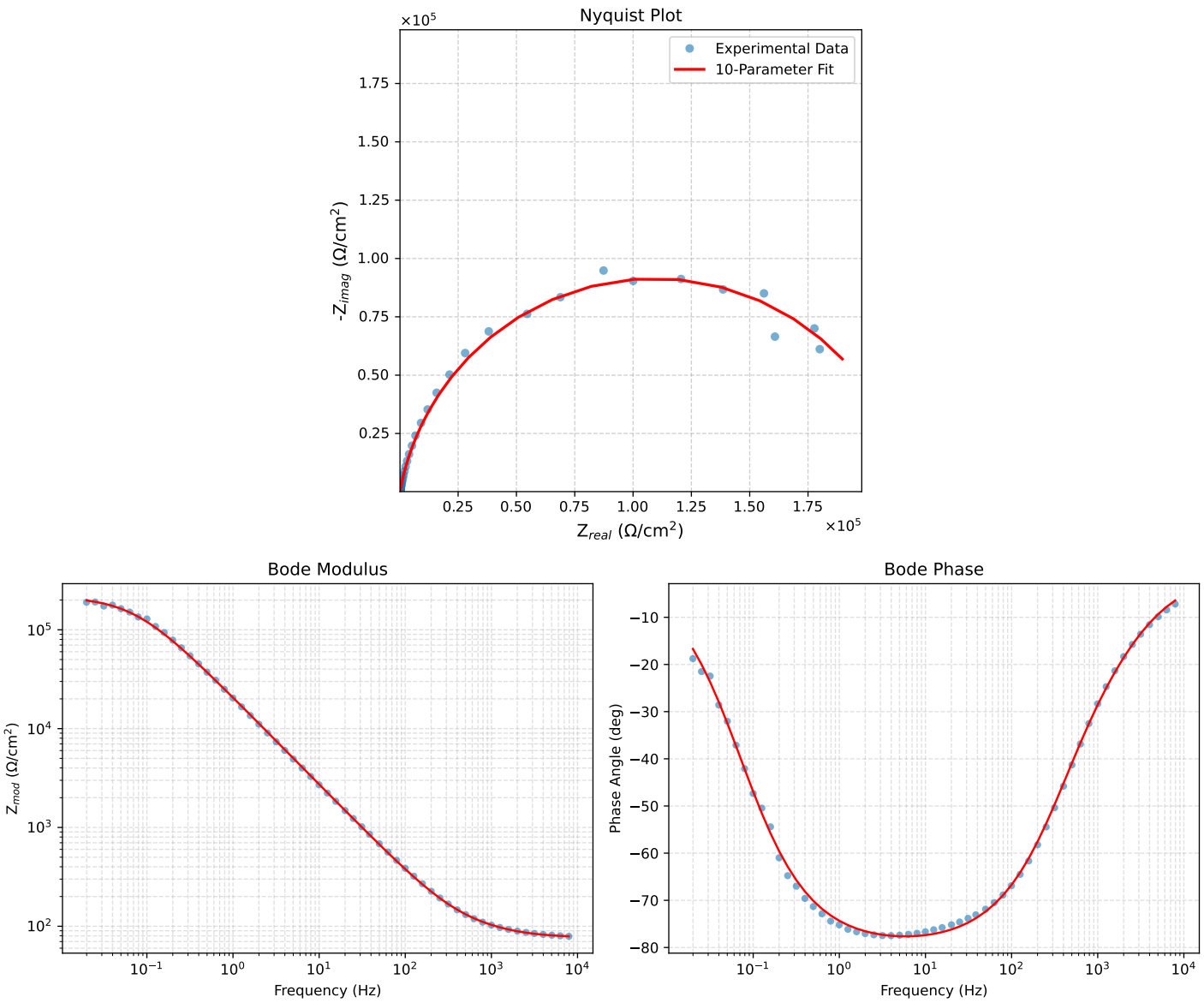

Figure 1: EIS Fit Results for Cauvel_1_Lcystine_8H

Analysis Results: 24H

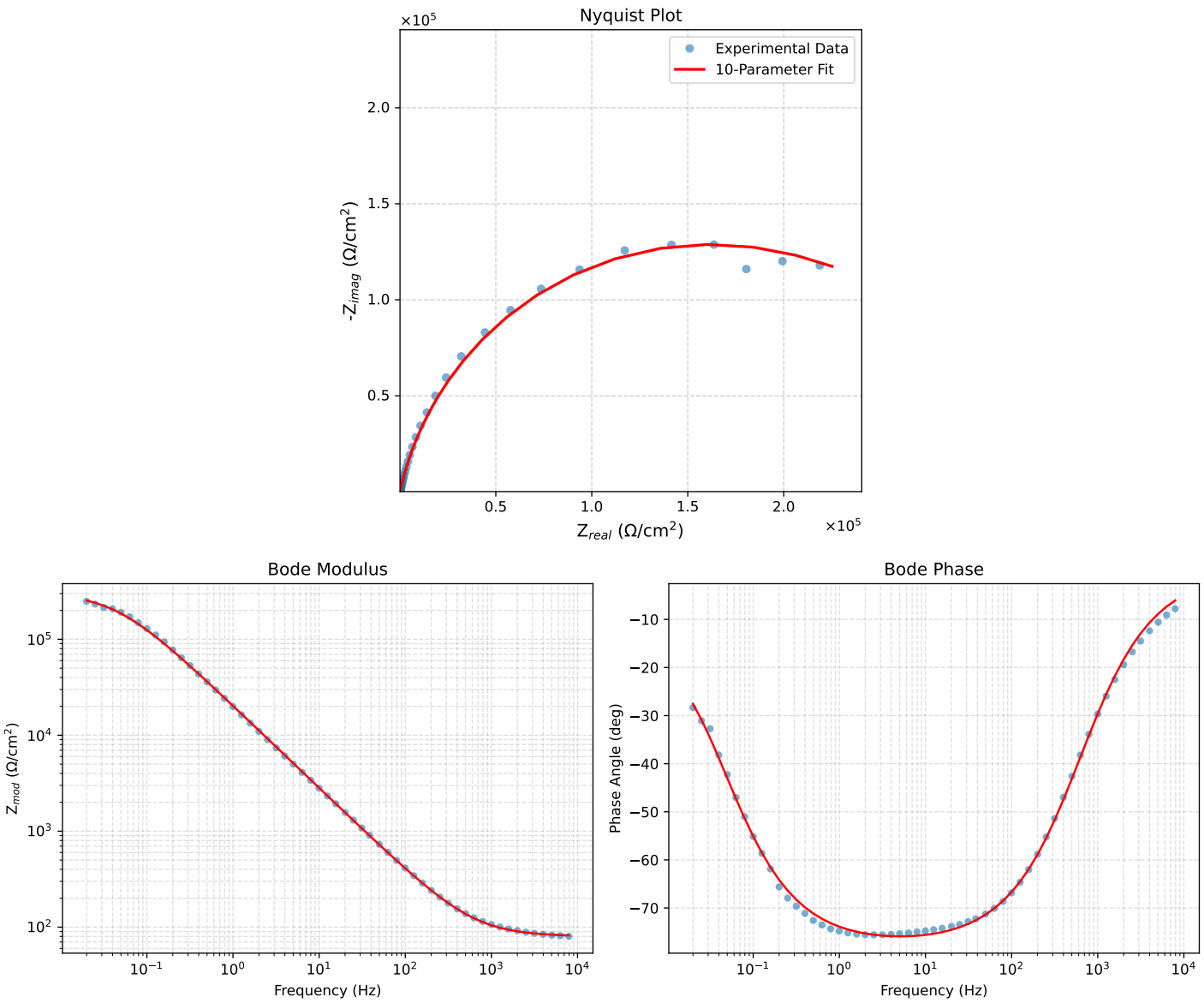

Figure 2: EIS Fit Results for Cauvel_1_Lcystine_24H

Analysis Results: 48H

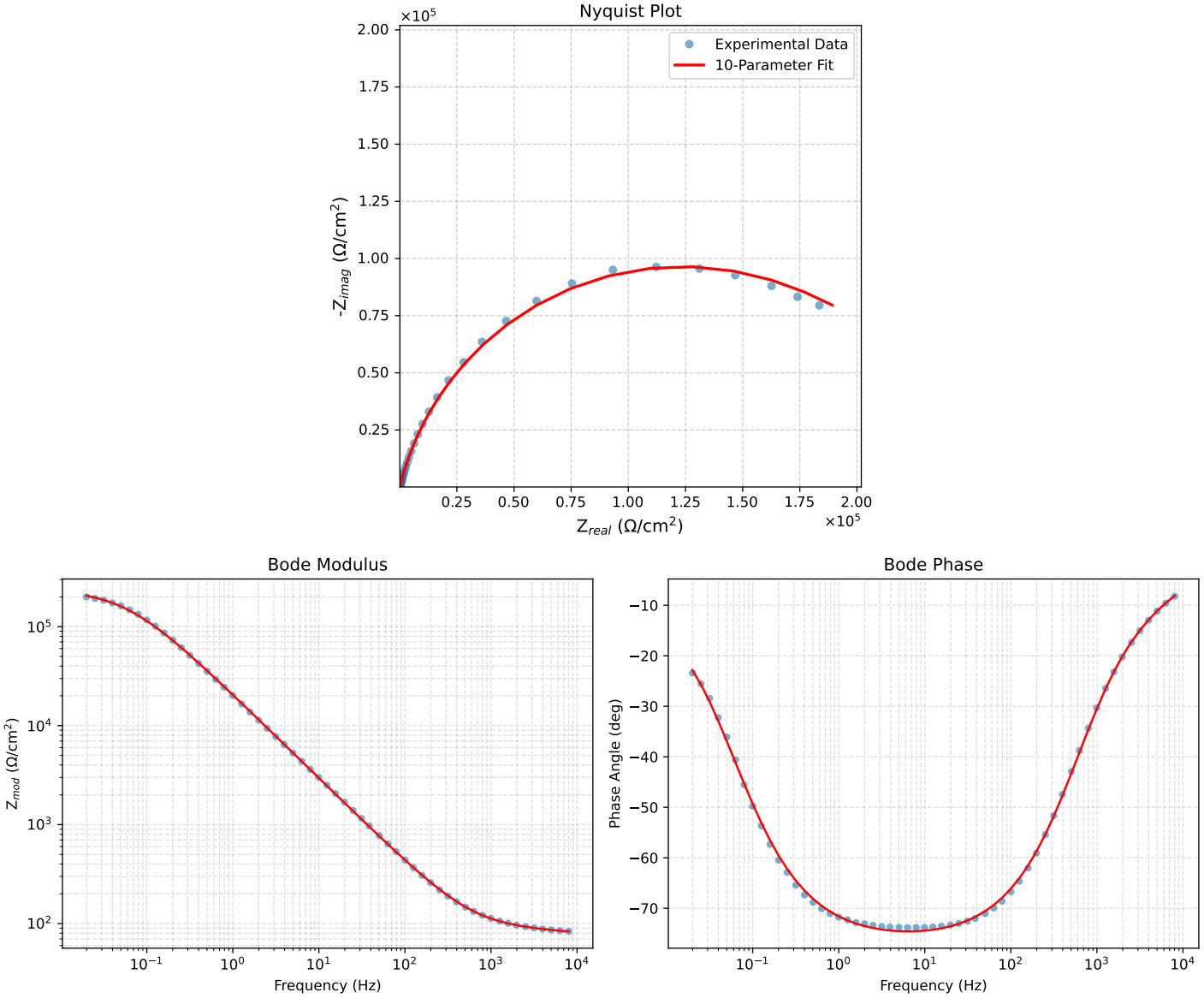

Figure 3: EIS Fit Results for Cauvel_1_Lcystine_48H

Analysis Results: 72H

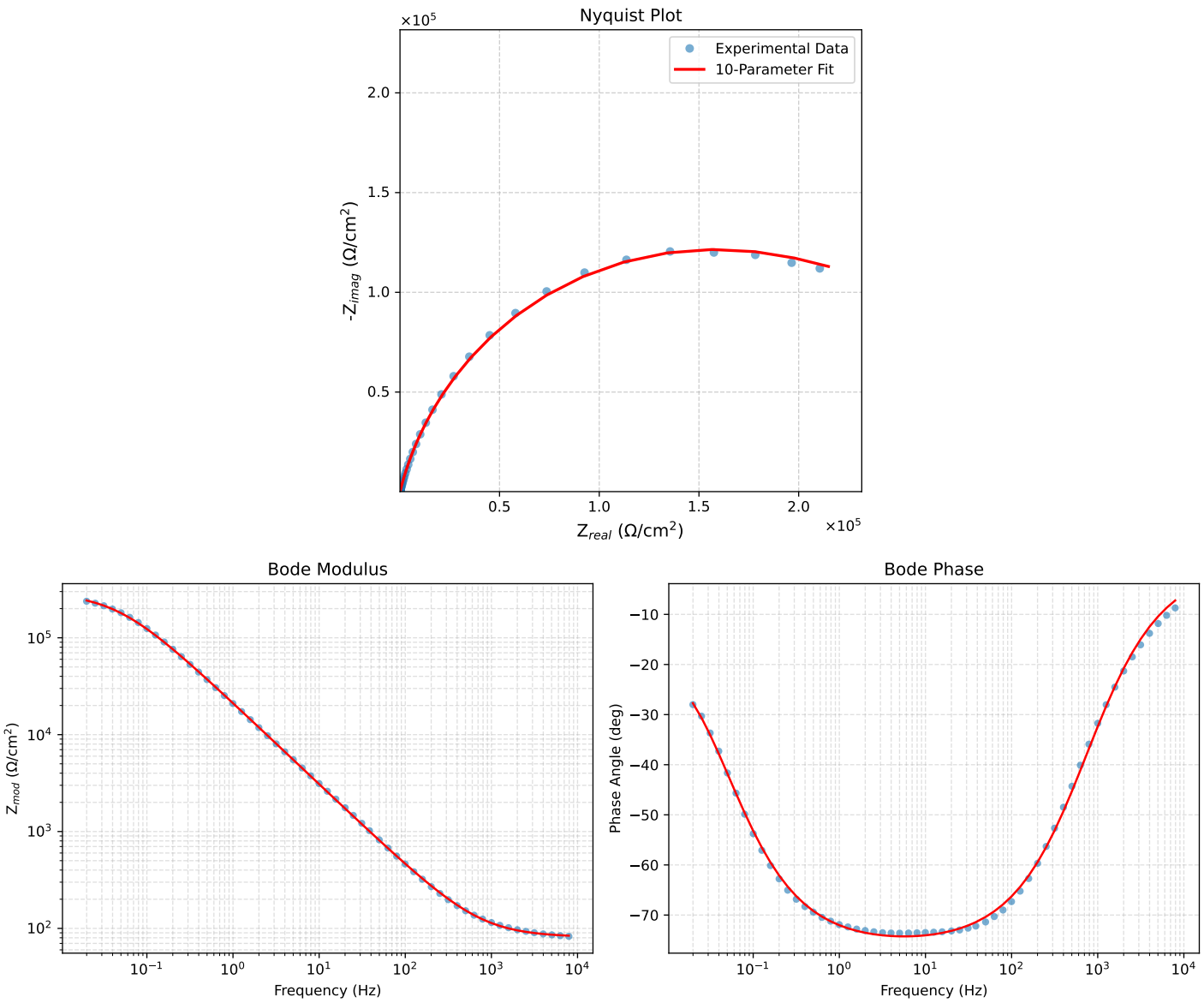

Figure 4: EIS Fit Results for Cauvel_1_Lcystine_72H

Analysis Results: 168H

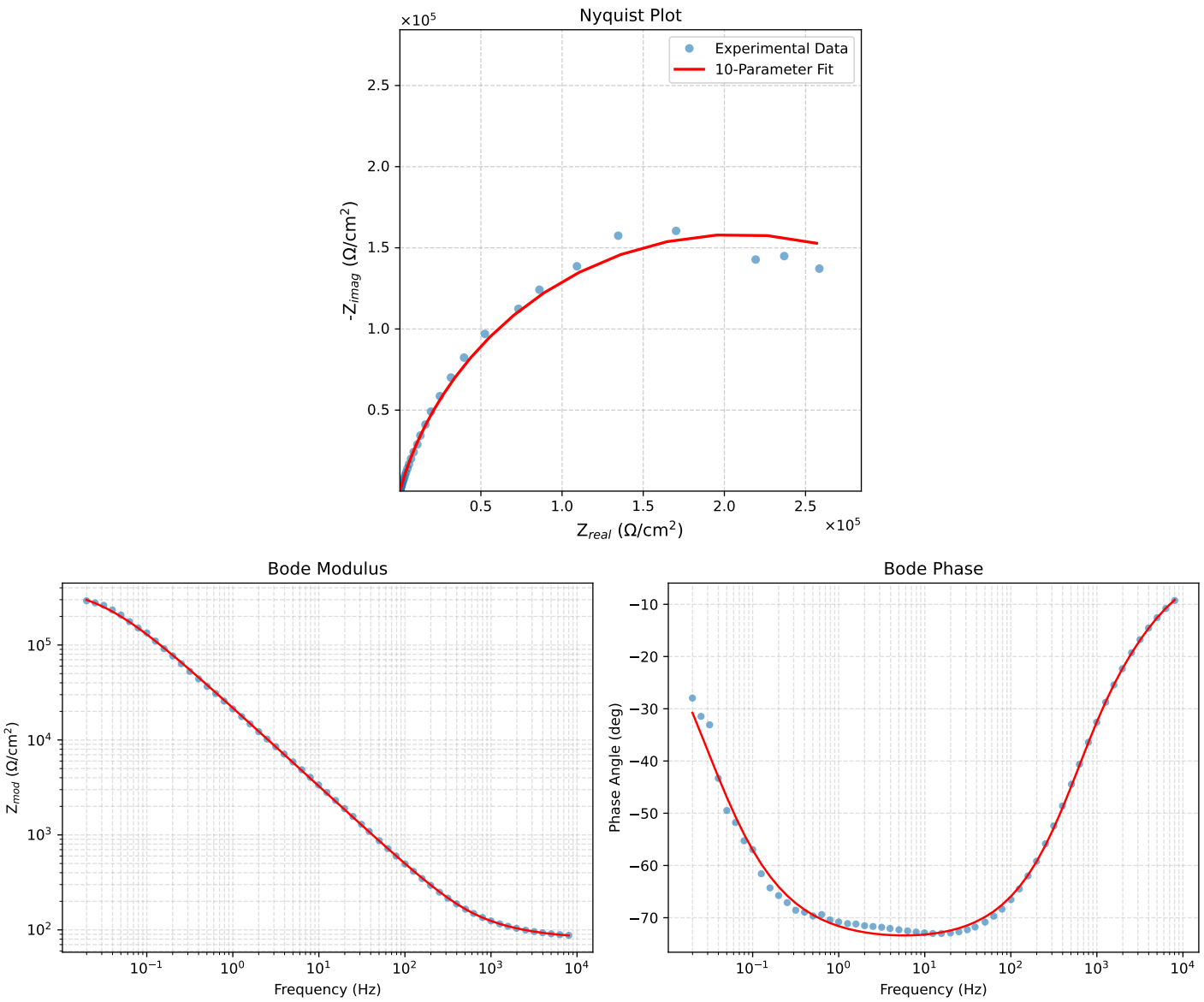

Figure 5: EIS Fit Results for Cauvel_1_Lcystine_168H