Comparative EIS Kinetics Report

Model Structure: `R0-p(R1-p(R2,CPE2),CPE1)`
Used data: original data

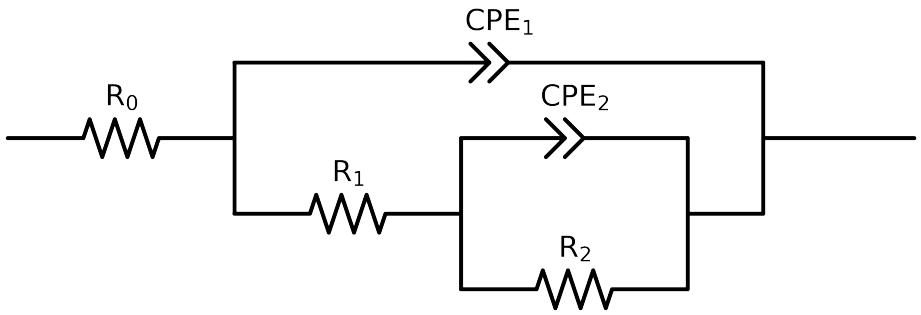

Element	Unit	Bounds	Cauvel_1_Lcystine_8H	Cauvel_1_Lcystine_24H	Cauvel_1_Lcystine_48H	Cauvel_1_Lcystine_72H	Cauvel_1_Lcystine_168H
R_0	Ω	$[1.0e-03, 1.0e+03]$	$7.76e+01 \pm 4.2e-01$	$1.00e-03 \pm 1.6e+02$	$7.81e+01 \pm 6.3e-01$	$9.74e+00 \pm 6.1e+01$	$7.99e+01 \pm 9.5e-01$
R_1	Ω	$[1.0e+00, 1.0e+08]$	$2.17e+05 \pm 3.6e+03$	$7.88e+01 \pm 1.6e+02$	$2.31e+01 \pm 6.5e+00$	$7.15e+01 \pm 6.1e+01$	$3.78e+01 \pm 2.6e+01$
R_2	Ω	$[1.0e+00, 1.0e+08]$	$1.00e+08 \pm 2.5e-05$	$3.30e+05 \pm 9.6e+03$	$2.49e+05 \pm 2.5e+03$	$3.42e+05 \pm 1.1e+04$	$3.81e+05 \pm 5.0e+03$
Q_2	$\Omega^{-1}\ \sec^a$	$[1.0e-11, 1.0e-03]$	$7.07e-04 \pm 3.3e-04$	$9.85e-06 \pm 3.9e-07$	$8.56e-06 \pm 8.7e-07$	$9.18e-06 \pm 3.8e-07$	$3.72e-06 \pm 2.5e-06$
n_2	-	$[5.0e-01, 1.0e+00]$	$1.00e+00 \pm 1.7e-01$	$8.63e-01 \pm 4.3e-03$	$8.13e-01 \pm 7.3e-03$	$8.53e-01 \pm 4.4e-03$	$8.45e-01 \pm 4.5e-02$
Q_1	$\Omega^{-1}\ \sec^a$	$[1.0e-11, 1.0e-03]$	$9.41e-06 \pm 6.9e-08$	$4.67e-07 \pm 3.8e-07$	$1.76e-06 \pm 8.5e-07$	$1.21e-06 \pm 3.4e-07$	$6.06e-06 \pm 2.5e-06$
n_1	-	$[5.0e-01, 1.0e+00]$	$8.82e-01 \pm 1.5e-03$	$5.34e-01 \pm 2.6e-01$	$9.55e-01 \pm 3.6e-02$	$5.00e-01 \pm 1.1e-01$	$8.29e-01 \pm 2.5e-02$
χ^2	-	-	$6.066e-04$	$8.803e-04$	$4.720e-04$	$5.559e-04$	$6.167e-04$

Analysis Results: 8H

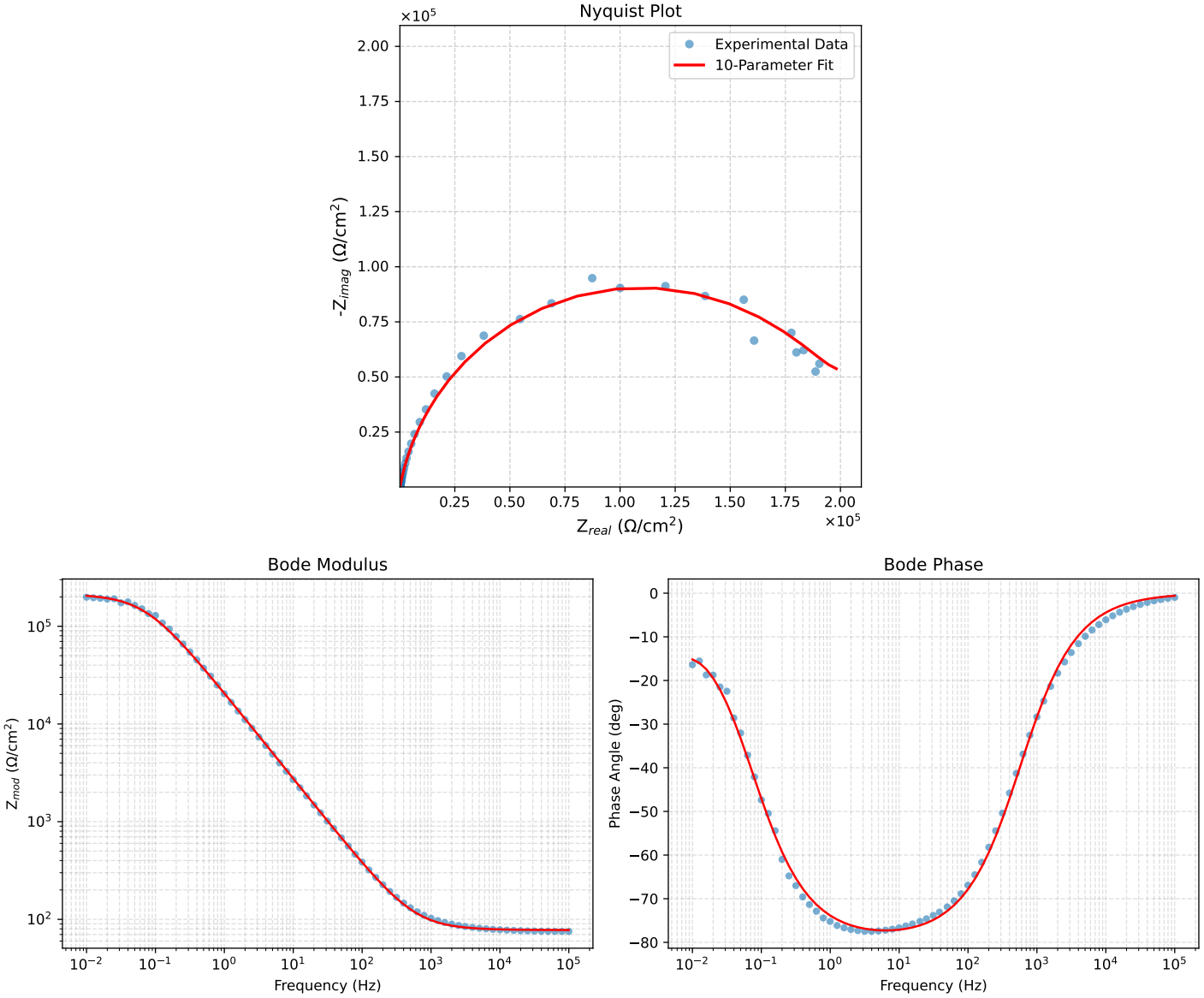

Figure 1: EIS Fit Results for Cauvel_1_Lcystine_8H

Analysis Results: 24H

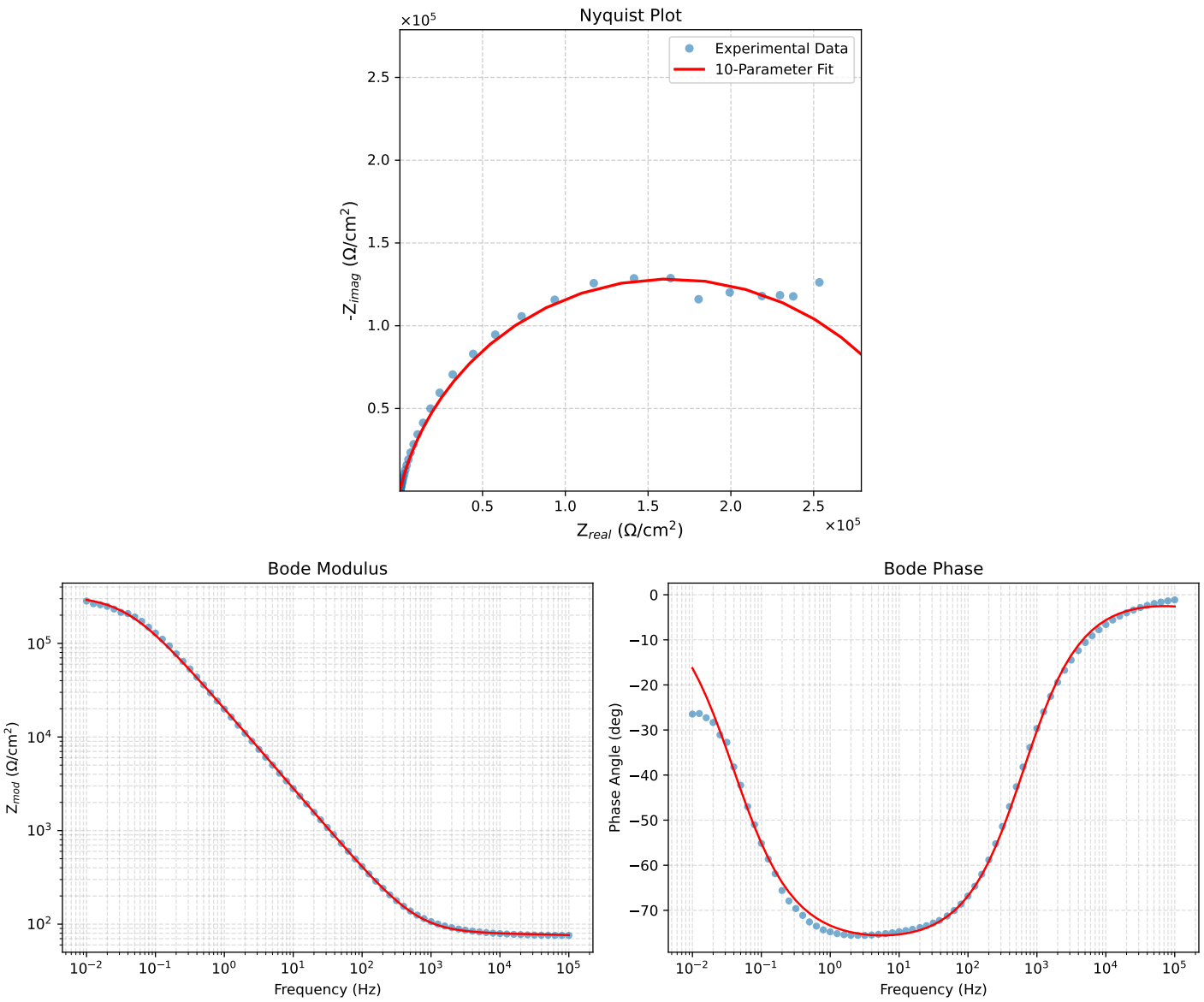

Figure 2: EIS Fit Results for Cauvel_1_Lcystine_24H

Analysis Results: 48H

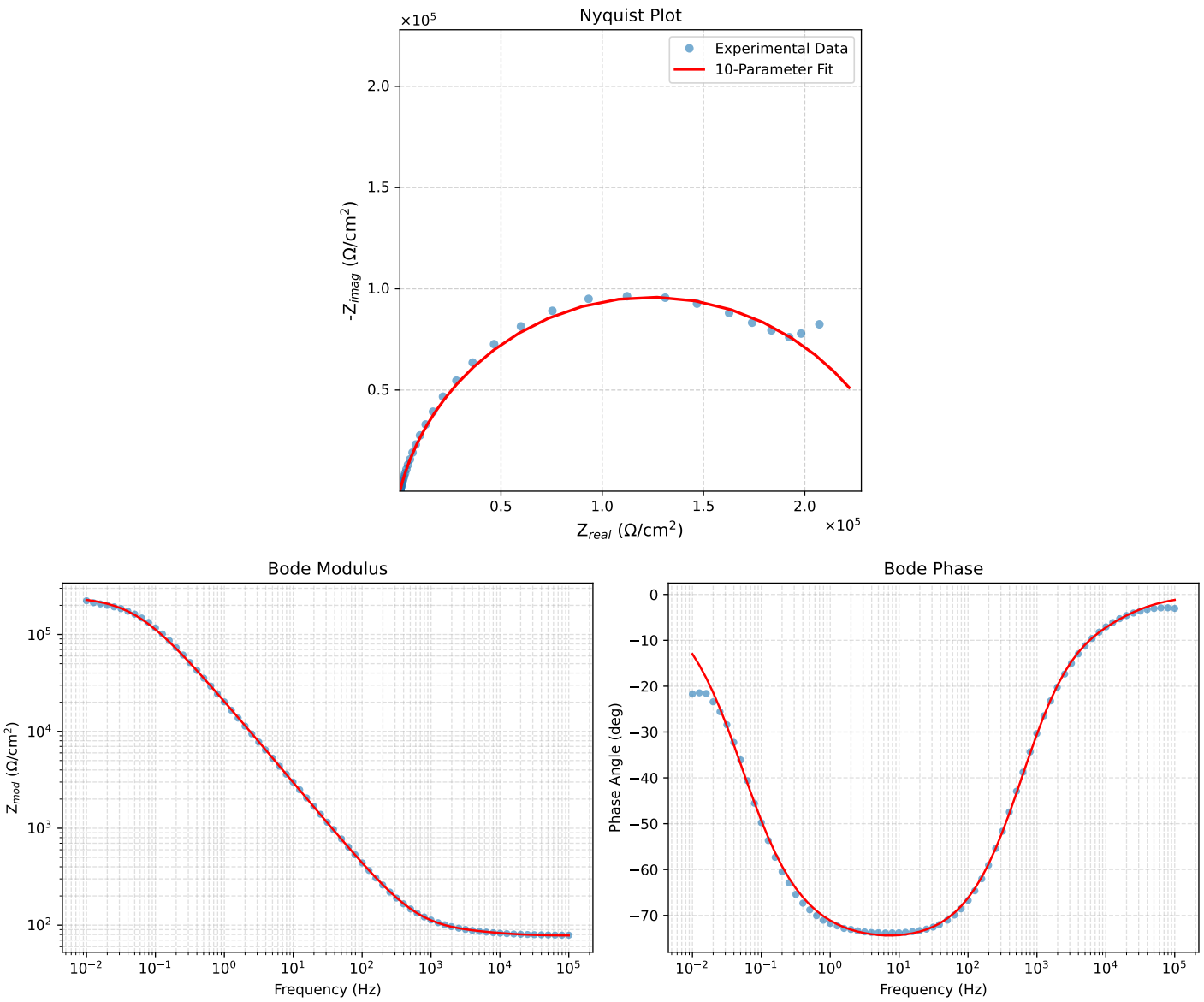

Figure 3: EIS Fit Results for Cauvel_1_Lcystine_48H

Analysis Results: 72H

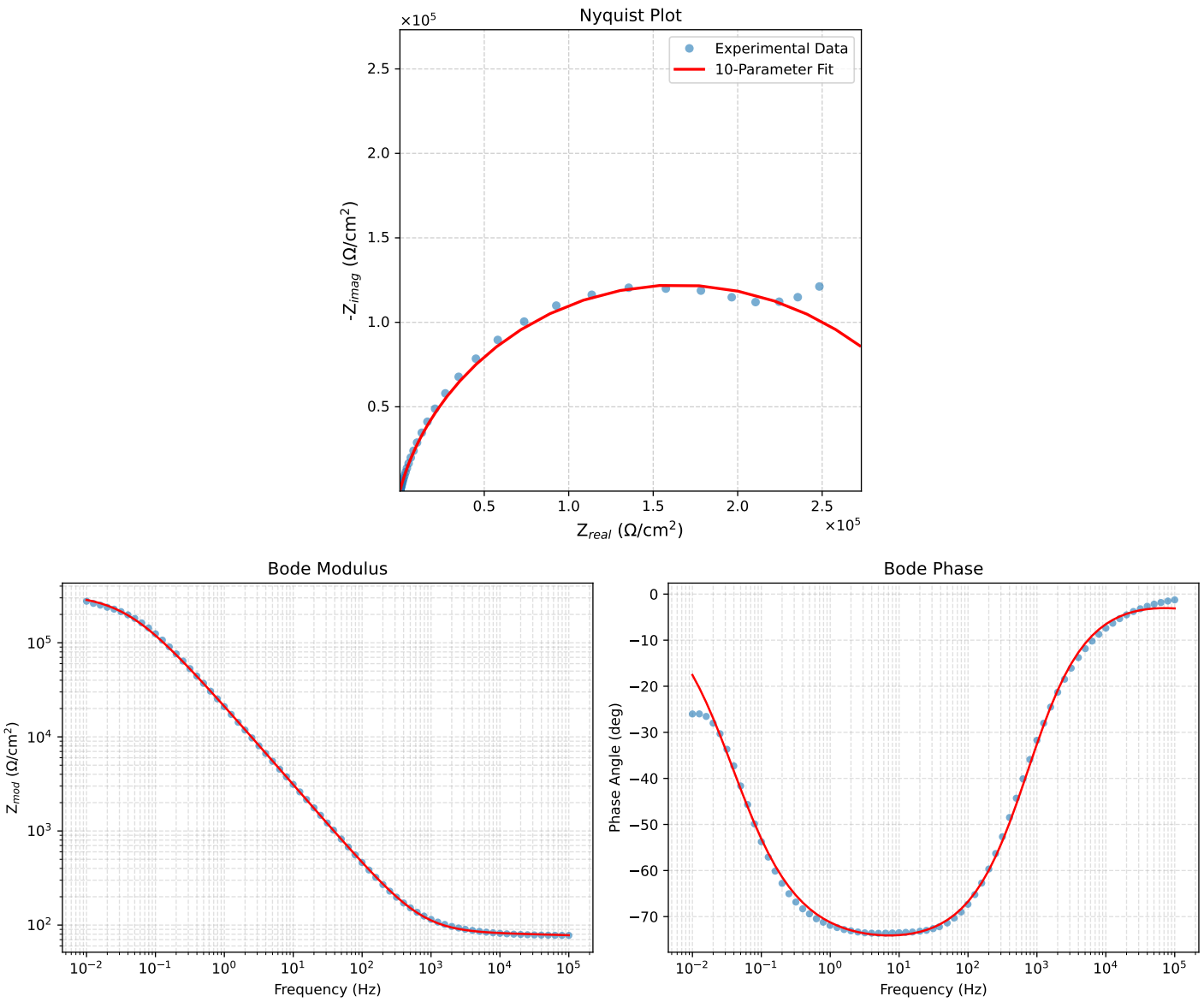

Figure 4: EIS Fit Results for Cauvel_1_Lcystine_72H

Analysis Results: 168H

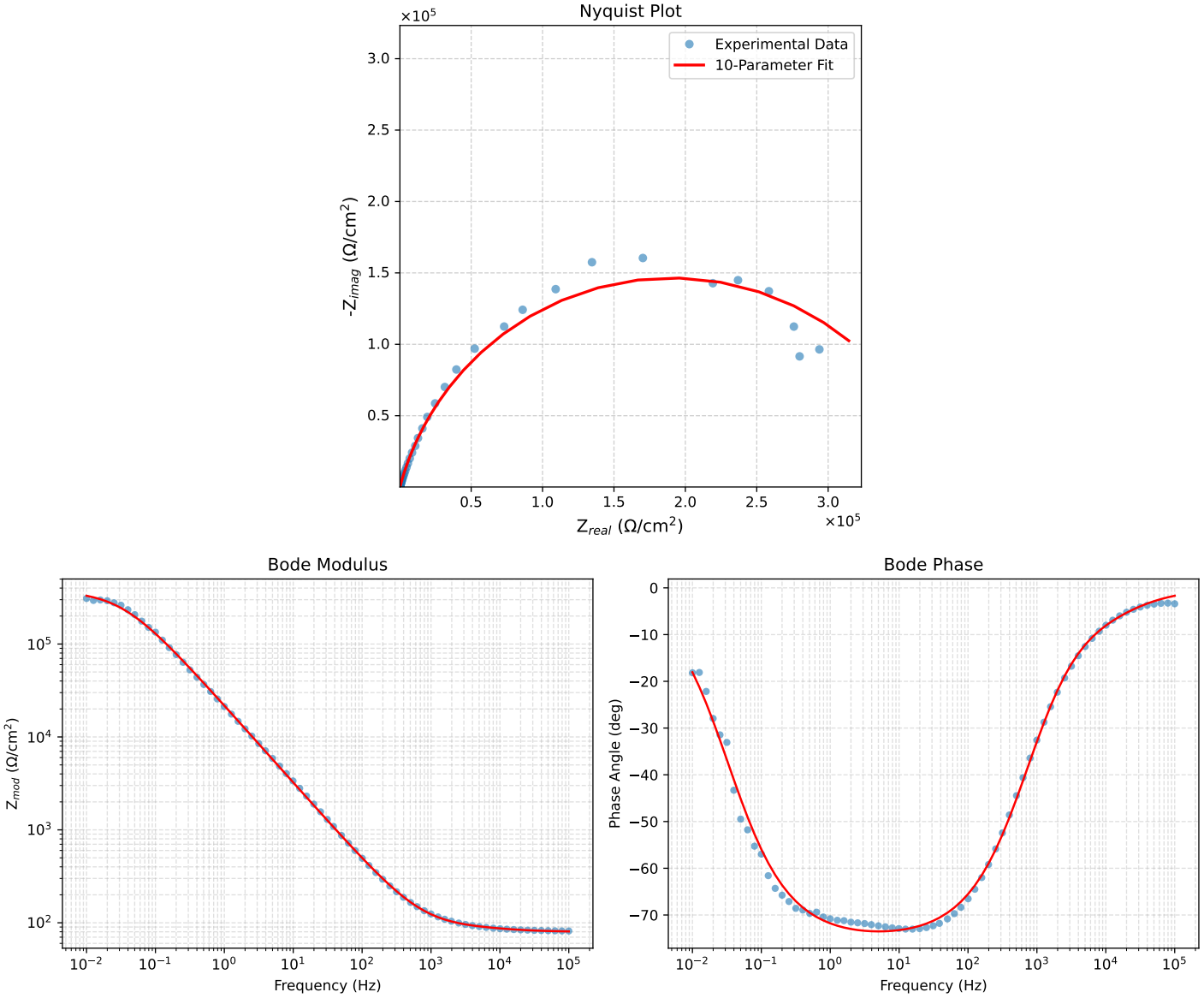

Figure 5: EIS Fit Results for Cauvel_1_Lcystine_168H