Comparative EIS Kinetics Report

Model Structure: `R0-p(R1-p(R2,CPE2),CPE1)`
Used data: altered data, first 5 points removed and points with $freq > 1e+04$ and $freq < 1e-03$ removed

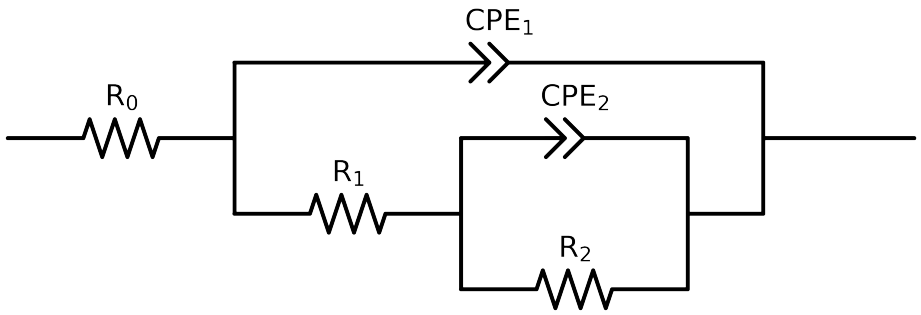

Element	Unit	Bounds	Cauvel_3_Mo_48H	Cauvel_3_Mo_72H
R_0	Ω	$[1.0e-03, 1.0e+03]$	$5.73e+01 \pm 3.3e-01$	$5.49e+01 \pm 2.8e-01$
R_1	Ω	$[1.0e+00, 1.0e+08]$	$5.65e+03 \pm 8.0e+02$	$7.21e+03 \pm 4.7e+02$
R_2	Ω	$[1.0e+00, 1.0e+12]$	$3.81e+04 \pm 3.4e+04$	$1.15e+04 \pm 3.0e+03$
Q_2	Ω^{-1} sec^a	$[1.0e-11, 1.0e-03]$	$2.69e-04 \pm 3.7e-05$	$3.09e-04 \pm 3.5e-05$
n_2	-	$[5.0e-01, 1.0e+00]$	$6.05e-01 \pm 1.2e-01$	$9.33e-01 \pm 9.9e-02$
Q_1	Ω^{-1} sec^a	$[1.0e-11, 1.0e-03]$	$1.09e-04 \pm 2.8e-06$	$1.28e-04 \pm 2.2e-06$
n_1	-	$[5.0e-01, 1.0e+00]$	$8.91e-01 \pm 5.5e-03$	$8.79e-01 \pm 3.9e-03$
χ^2	-	-	$5.980e-04$	$4.693e-04$

Analysis Results: 48H

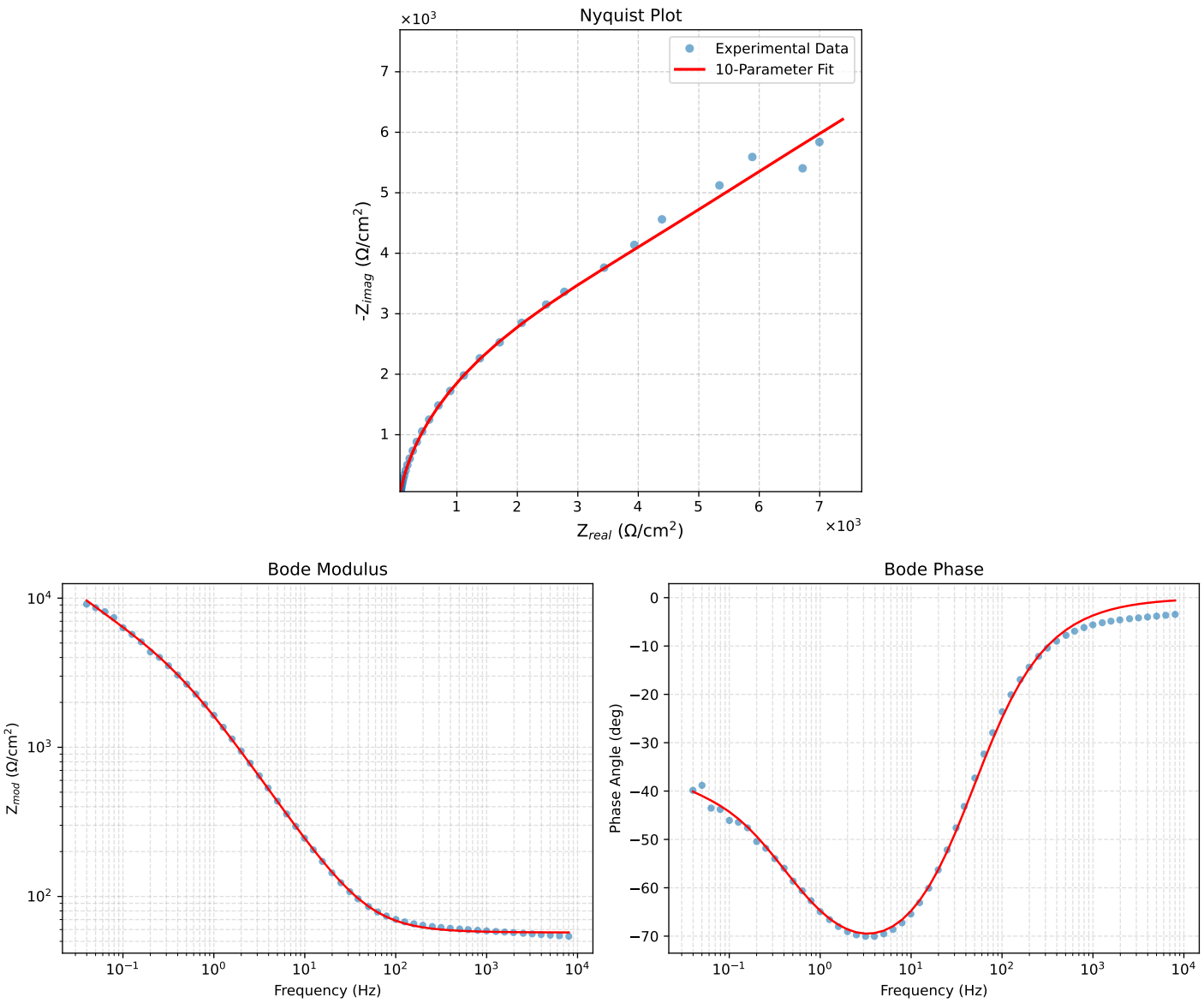

Figure 1: EIS Fit Results for Cauvel_3_Mo_48H

Analysis Results: 72H

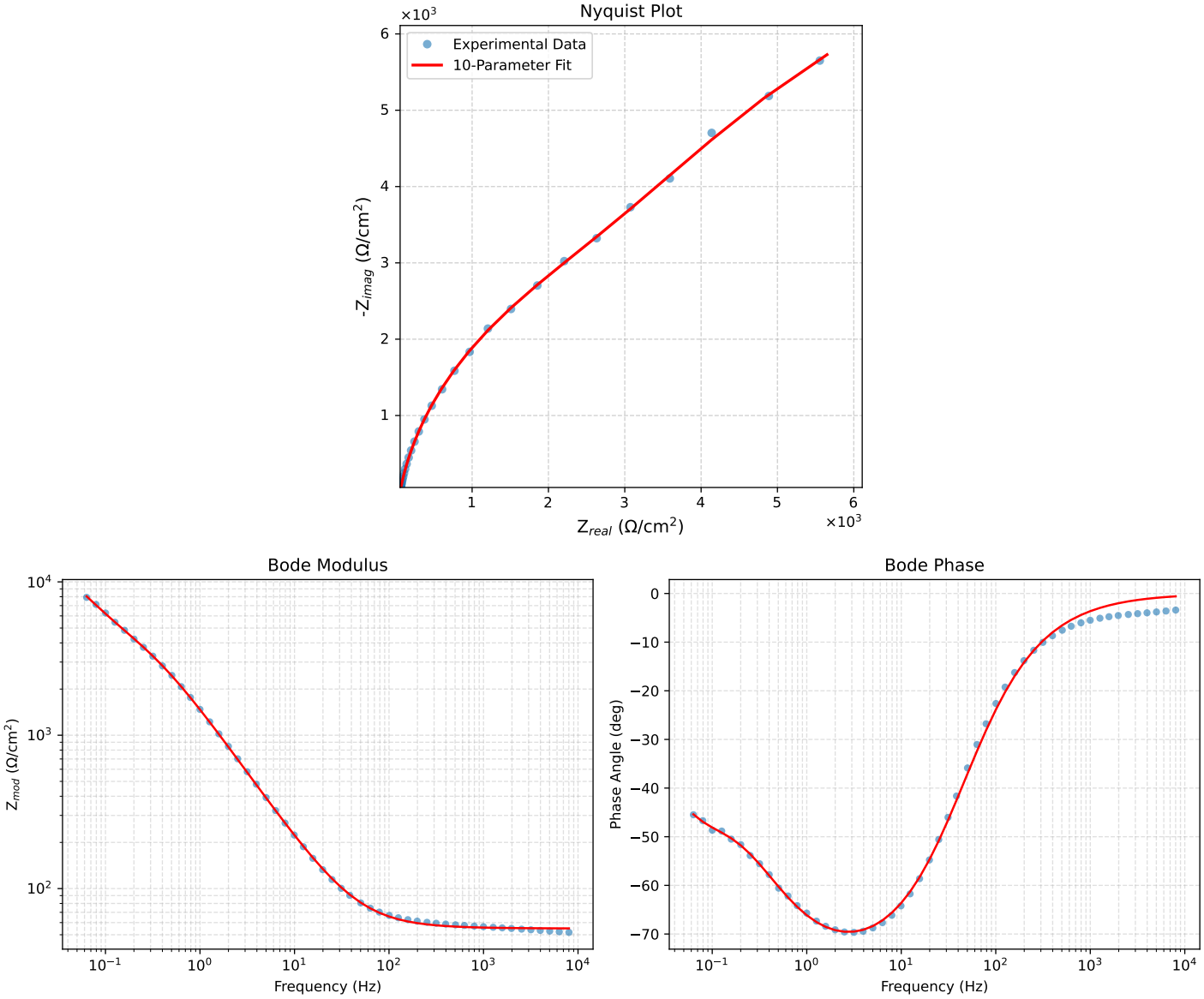

Figure 2: EIS Fit Results for Cauvel_3_Mo_72H