Comparative EIS Kinetics Report

Model Structure: `R0-p(R1-p(R2,CPE2),CPE1)`
Used data: altered data, first 1 points removed and points with $freq > 1e+04$ and $freq < 1e-03$ removed

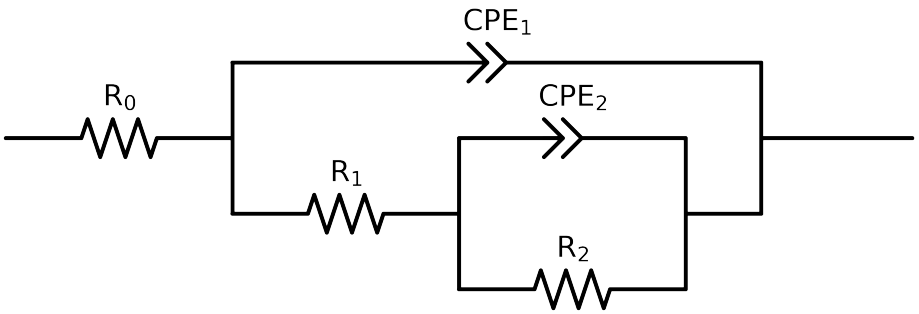

Element	Unit	Bounds	Cauvel_3_Mo_8H
R_0	Ω	$[1.0e-03, 1.0e+03]$	$5.72e+01 \pm 3.5e-01$
R_1	Ω	$[1.0e+00, 1.0e+08]$	$4.67e+03 \pm 2.3e+02$
R_2	Ω	$[1.0e+00, 1.0e+12]$	$2.12e+04 \pm 1.8e+03$
Q_2	Ω^{-1} sec^a	$[1.0e-11, 1.0e-03]$	$2.84e-04 \pm 1.6e-05$
n_2	-	$[5.0e-01, 1.0e+00]$	$6.95e-01 \pm 3.0e-02$
Q_1	Ω^{-1} sec^a	$[1.0e-11, 1.0e-03]$	$6.87e-05 \pm 1.5e-06$
n_1	-	$[5.0e-01, 1.0e+00]$	$8.97e-01 \pm 4.4e-03$
χ^2	-	-	$6.067e-04$

Analysis Results: 8H

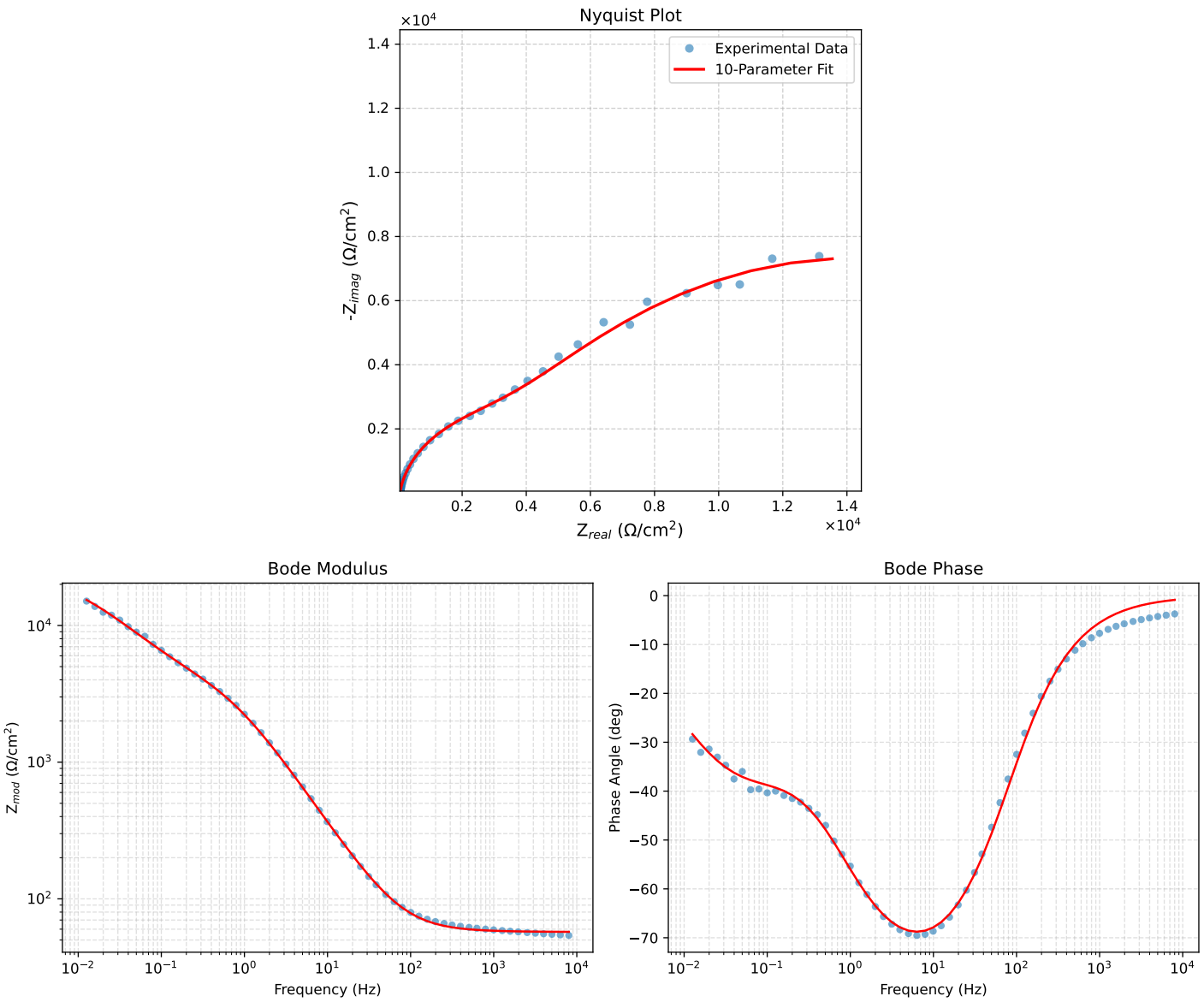

Figure 1: EIS Fit Results for Cauvel_3_Mo_8H