Comparative EIS Kinetics Report

Model Structure: `R0-p(R1-p(R2,CPE2),CPE1)`
Used data: original data

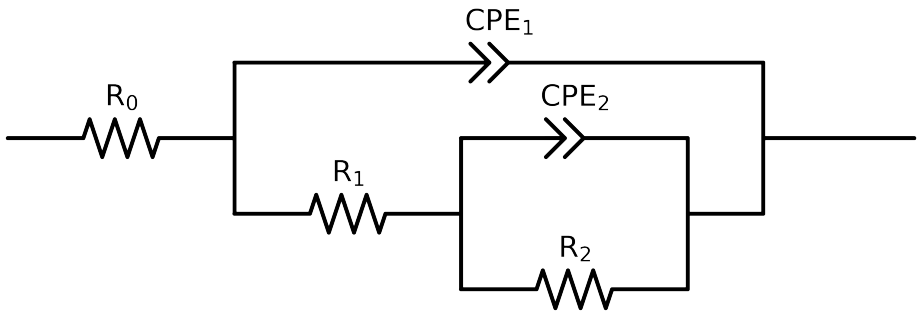

Element	Unit	Bounds	Cauvel_3_Mo_8H	Cauvel_3_Mo_24H	Cauvel_3_Mo_48H	Cauvel_3_Mo_72H	Cauvel_3_Mo_168H
R_0	Ω	$[1.0e-03, 1.0e+03]$	$5.48e+01 \pm 3.7e-01$	$5.58e+01 \pm 7.6e-01$	$5.50e+01 \pm 3.9e-01$	$5.28e+01 \pm 3.3e-01$	$5.18e+01 \pm 1.1e+00$
R_1	Ω	$[1.0e+00, 1.0e+08]$	$4.85e+03 \pm 3.5e+02$	$1.00e+00 \pm 6.8e+04$	$6.83e+03 \pm 6.7e+02$	$7.33e+03 \pm 6.6e+02$	$1.82e+01 \pm 1.0e+00$
R_2	Ω	$[1.0e+00, 1.0e+12]$	$2.44e+04 \pm 3.2e+03$	$3.55e+04 \pm 6.5e+04$	$2.76e+04 \pm 5.9e+03$	$2.29e+04 \pm 3.4e+03$	$2.59e+04 \pm 2.1e+03$
Q_2	Ω^{-1} sec^a	$[1.0e-11, 1.0e-03]$	$2.89e-04 \pm 2.4e-05$	$1.22e-04 \pm 4.6e-04$	$3.21e-04 \pm 4.9e-05$	$3.02e-04 \pm 4.3e-05$	$8.20e-05 \pm 7.2e-06$
n_2	-	$[5.0e-01, 1.0e+00]$	$6.69e-01 \pm 4.3e-02$	$5.00e-01 \pm 6.0e-02$	$7.05e-01 \pm 7.0e-02$	$7.64e-01 \pm 6.4e-02$	$9.94e-01 \pm 1.4e-02$
Q_1	Ω^{-1} sec^a	$[1.0e-11, 1.0e-03]$	$7.15e-05 \pm 2.1e-06$	$4.81e-05 \pm 1.0e-03$	$1.15e-04 \pm 3.2e-06$	$1.31e-04 \pm 3.1e-06$	$2.43e-04 \pm 6.3e-06$
n_1	-	$[5.0e-01, 1.0e+00]$	$8.87e-01 \pm 6.0e-03$	$9.90e-01 \pm 1.7e-01$	$8.77e-01 \pm 6.3e-03$	$8.71e-01 \pm 5.5e-03$	$5.00e-01 \pm 1.6e-02$
χ^2	-	-	$1.233e-03$	$2.596e-03$	$1.465e-03$	$1.156e-03$	$6.319e-04$

Analysis Results: 8H

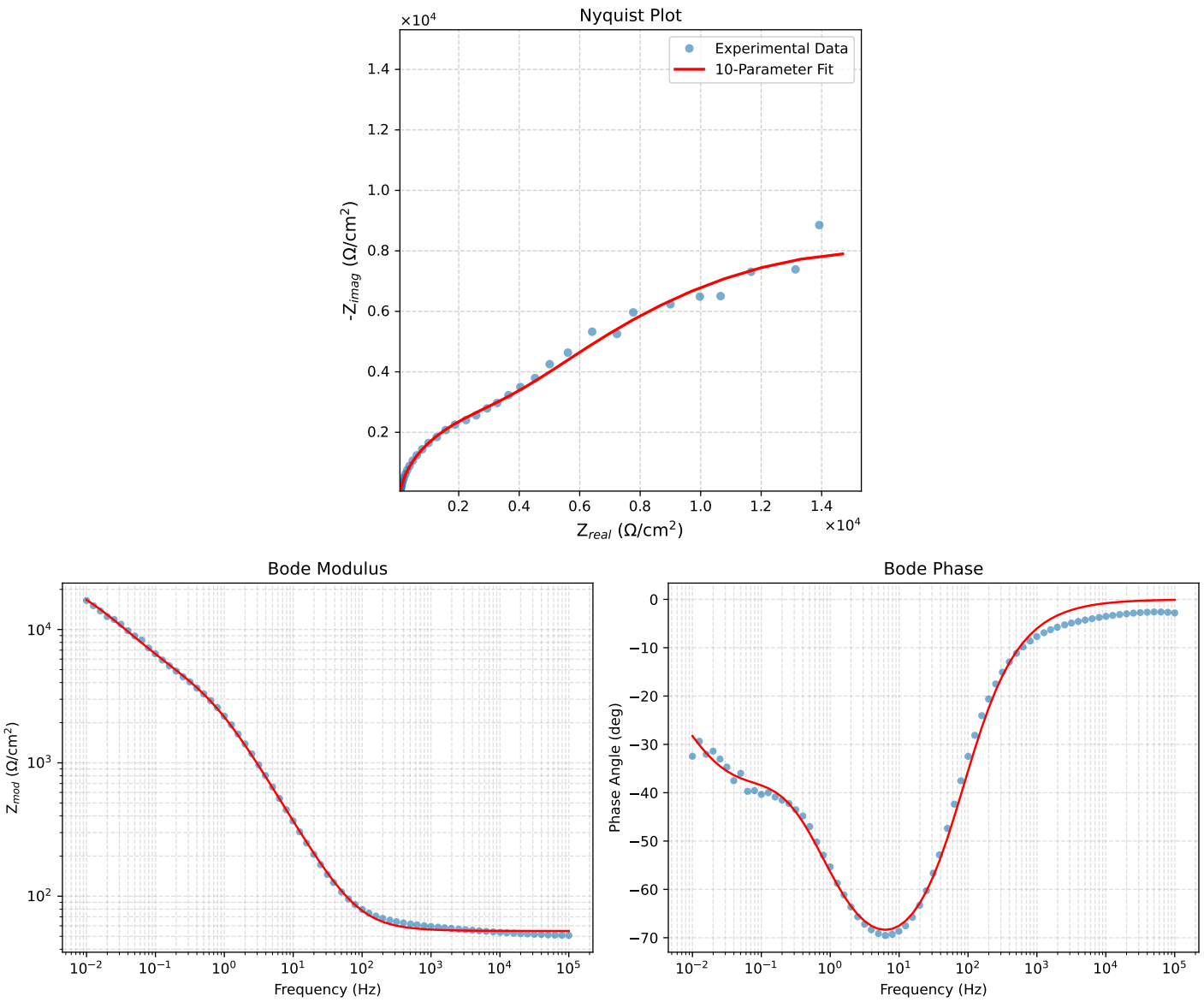

Figure 1: EIS Fit Results for Cauvel_3_Mo_8H

Analysis Results: 24H

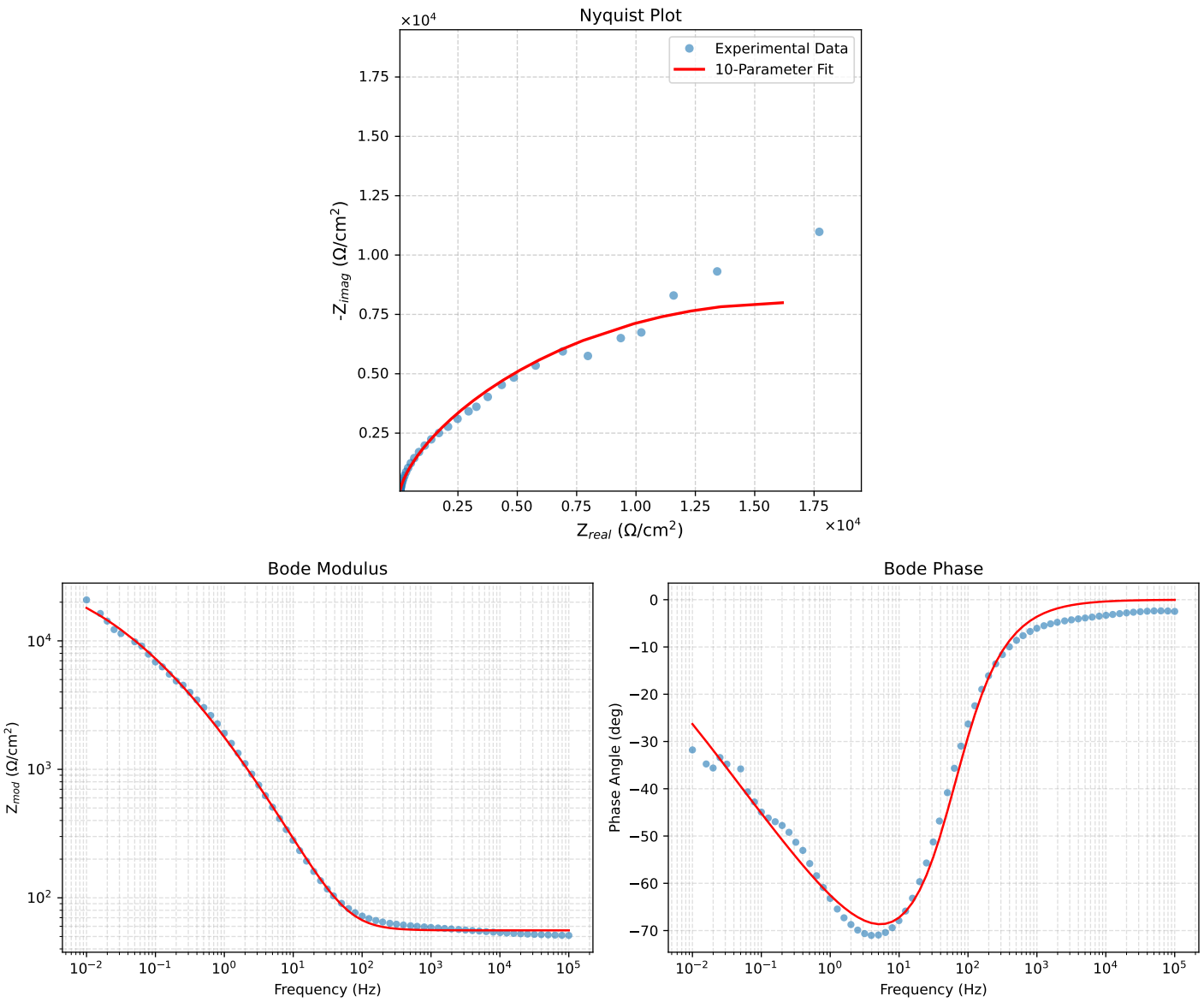

Figure 2: EIS Fit Results for Cauvel_3_Mo_24H

Analysis Results: 48H

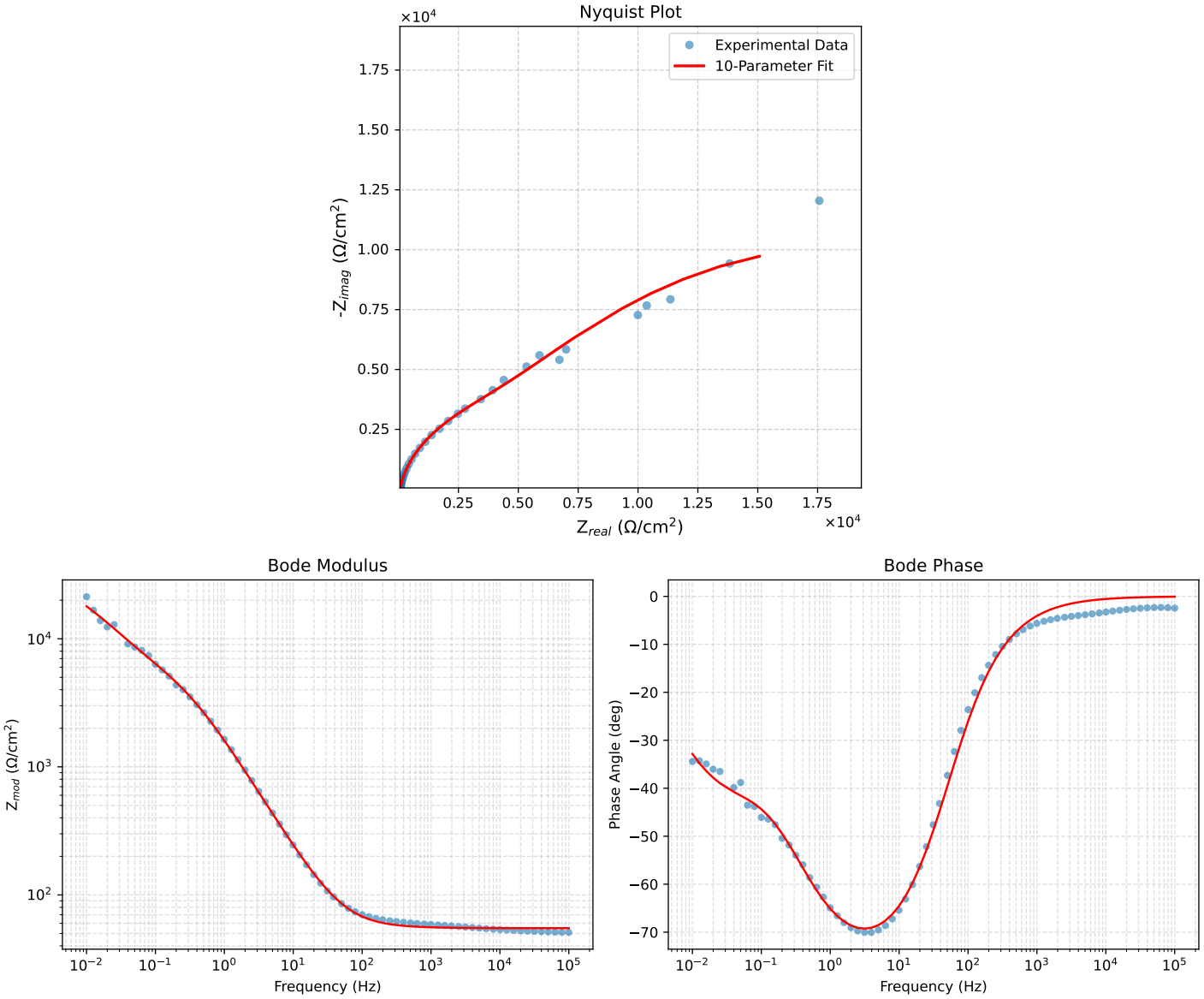

Figure 3: EIS Fit Results for Cauvel_3_Mo_48H

Analysis Results: 72H

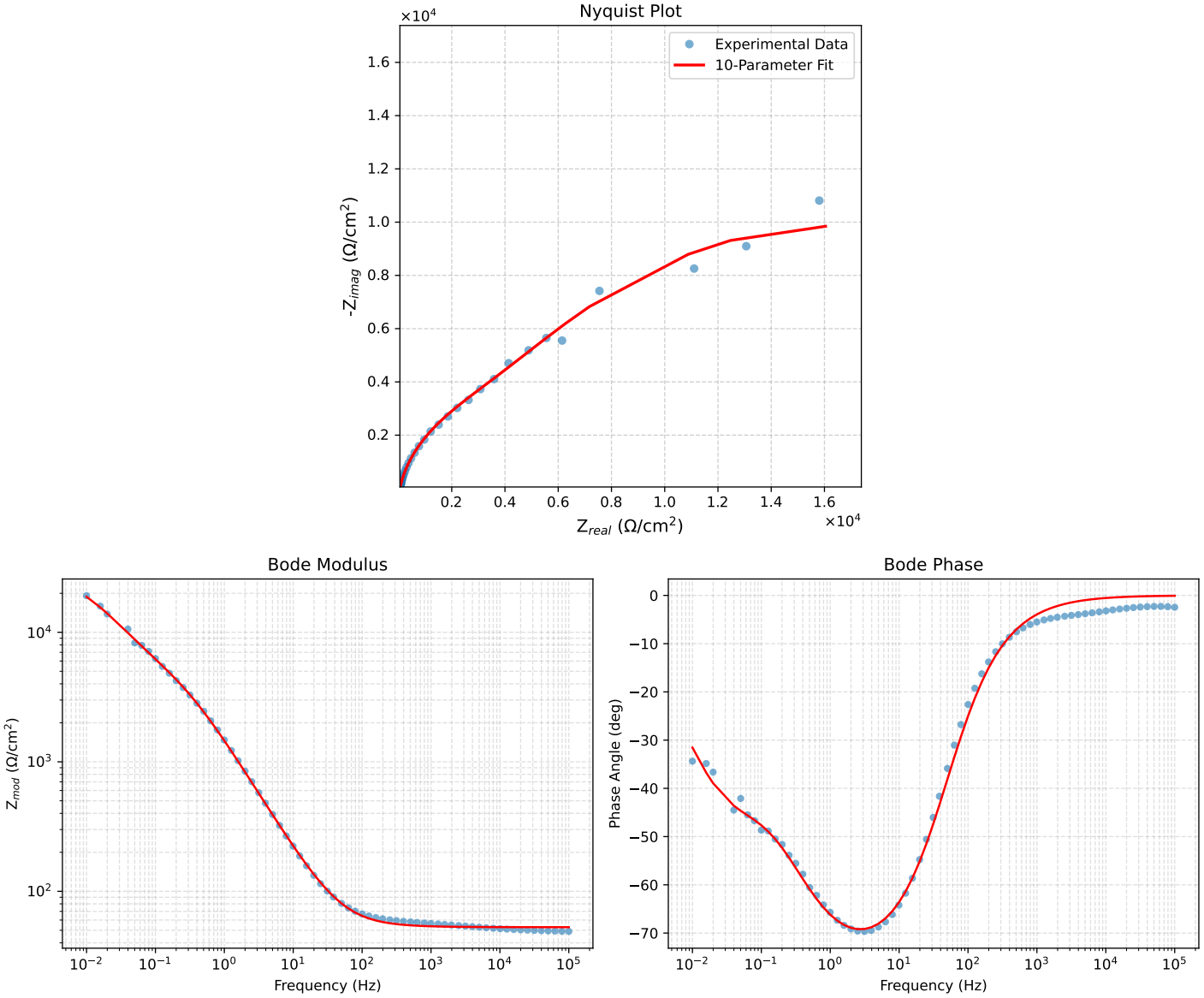

Figure 4: EIS Fit Results for Cauvel_3_Mo_72H

Analysis Results: 168H

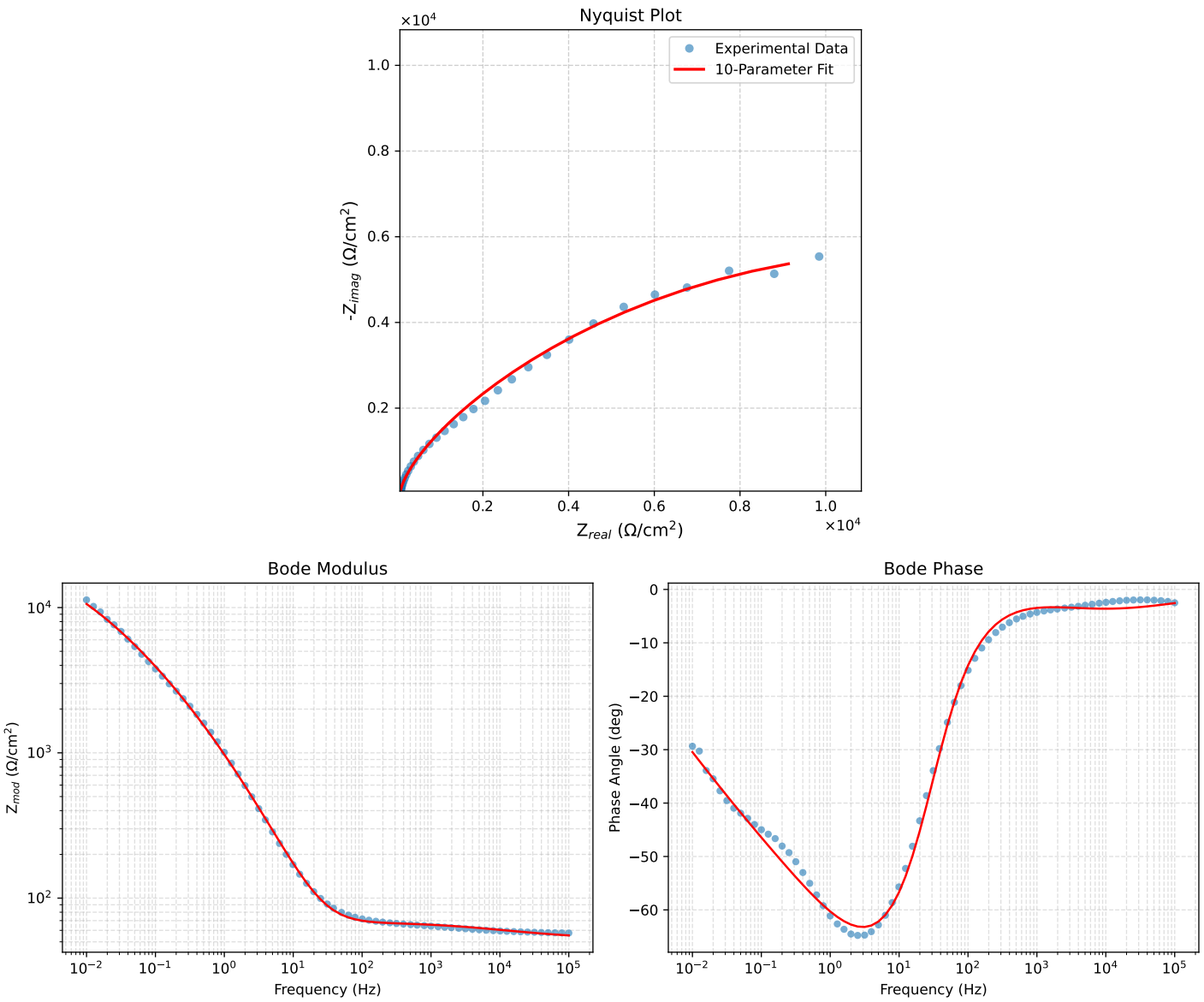

Figure 5: EIS Fit Results for Cauvel_3_Mo_168H