Comparative EIS Kinetics Report

Model Structure: `R0-p(R1-p(R2,CPE2),CPE1)`
Used data: altered data, first 5 points removed and points with $freq > 1e+04$ and $freq < 1e-03$ removed

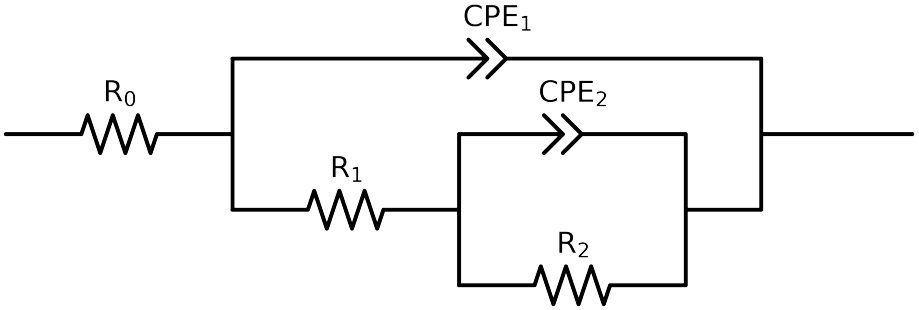

Element	Unit	Bounds	Cauvel_4_NaCl_1H
R_0	Ω	$[1.0e-03, 1.0e+03]$	$7.41e+01 \pm 3.3e-01$
R_1	Ω	$[1.0e+00, 1.0e+08]$	$7.43e+03 \pm 1.3e+02$
R_2	Ω	$[1.0e+00, 1.0e+12]$	$3.88e+03 \pm 3.0e+02$
Q_2	$\Omega^{-1}\ \mathrm{sec}^a$	$[1.0e-11, 1.0e-03]$	$3.82e-04 \pm 2.9e-05$
n_2	-	$[5.0e-01, 1.0e+00]$	$1.00e+00 \pm 4.9e-02$
Q_1	$\Omega^{-1}\ \mathrm{sec}^a$	$[1.0e-11, 1.0e-03]$	$3.75e-05 \pm 4.5e-07$
n_1	-	$[5.0e-01, 1.0e+00]$	$8.53e-01 \pm 2.4e-03$
χ^2	-	-	$2.545e-04$

Analysis Results: 1H

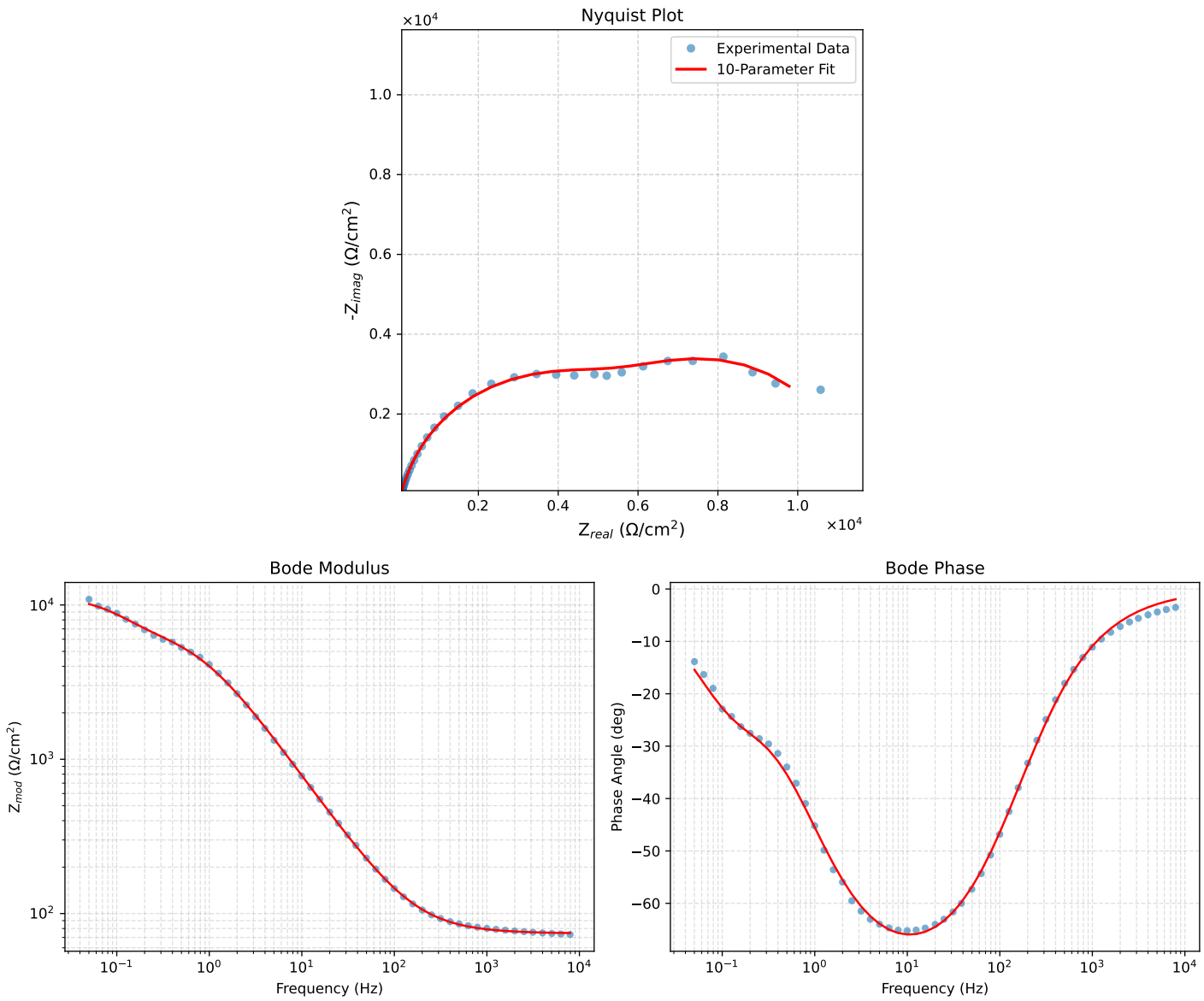

Figure 1: EIS Fit Results for Cauvel_4_NaCl_1H