Comparative EIS Kinetics Report

Model Structure: `R0-p(R1-p(R2,CPE2),CPE1)`
Used data: altered data, first 0 points removed and points with $freq > 1e+04$ and $freq < 1e-03$ removed

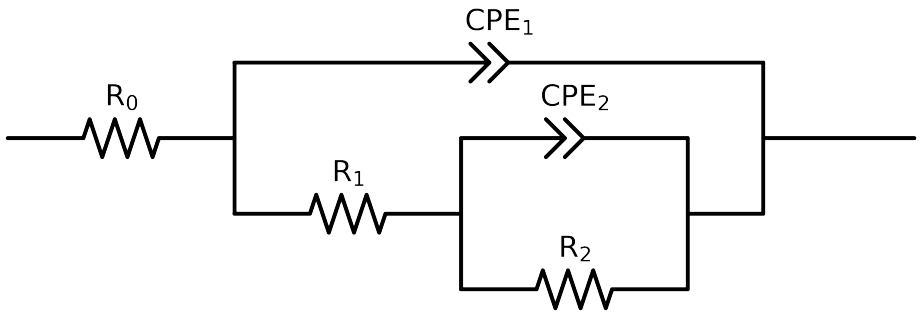

Element	Unit	Bounds	Cauvel_4_NaCl_24H	Cauvel_4_NaCl_48H	Cauvel_4_NaCl_72H	Cauvel_4_NaCl_168H
R_0	Ω	$[1.0e-03, 1.0e+03]$	$7.43e+01 \pm 3.6e-01$	$7.26e+01 \pm 3.4e-01$	$6.84e+01 \pm 3.1e-01$	$5.50e+01 \pm 2.8e-01$
R_1	Ω	$[1.0e+00, 1.0e+08]$	$2.87e+03 \pm 6.8e+02$	$3.19e+03 \pm 4.0e+02$	$3.21e+03 \pm 3.4e+02$	$3.90e+03 \pm 2.3e+02$
R_2	Ω	$[1.0e+00, 1.0e+12]$	$2.96e+04 \pm 2.9e+03$	$3.05e+04 \pm 2.6e+03$	$4.26e+04 \pm 4.8e+03$	$1.57e+04 \pm 1.0e+03$
Q_2	Ω^{-1} sec^a	$[1.0e-11, 1.0e-03]$	$1.30e-04 \pm 8.7e-06$	$1.72e-04 \pm 8.2e-06$	$2.04e-04 \pm 8.5e-06$	$3.75e-04 \pm 2.3e-05$
n_2	-	$[5.0e-01, 1.0e+00]$	$5.00e-01 \pm 2.9e-02$	$5.69e-01 \pm 2.5e-02$	$5.79e-01 \pm 2.4e-02$	$7.51e-01 \pm 2.9e-02$
Q_1	Ω^{-1} sec^a	$[1.0e-11, 1.0e-03]$	$9.13e-05 \pm 3.8e-06$	$9.96e-05 \pm 3.0e-06$	$1.14e-04 \pm 3.0e-06$	$1.54e-04 \pm 3.1e-06$
n_1	-	$[5.0e-01, 1.0e+00]$	$8.52e-01 \pm 7.3e-03$	$8.71e-01 \pm 5.8e-03$	$8.73e-01 \pm 5.3e-03$	$8.69e-01 \pm 4.5e-03$
χ^2	-	-	$3.345e-04$	$3.539e-04$	$3.386e-04$	$5.087e-04$

Analysis Results: 24H

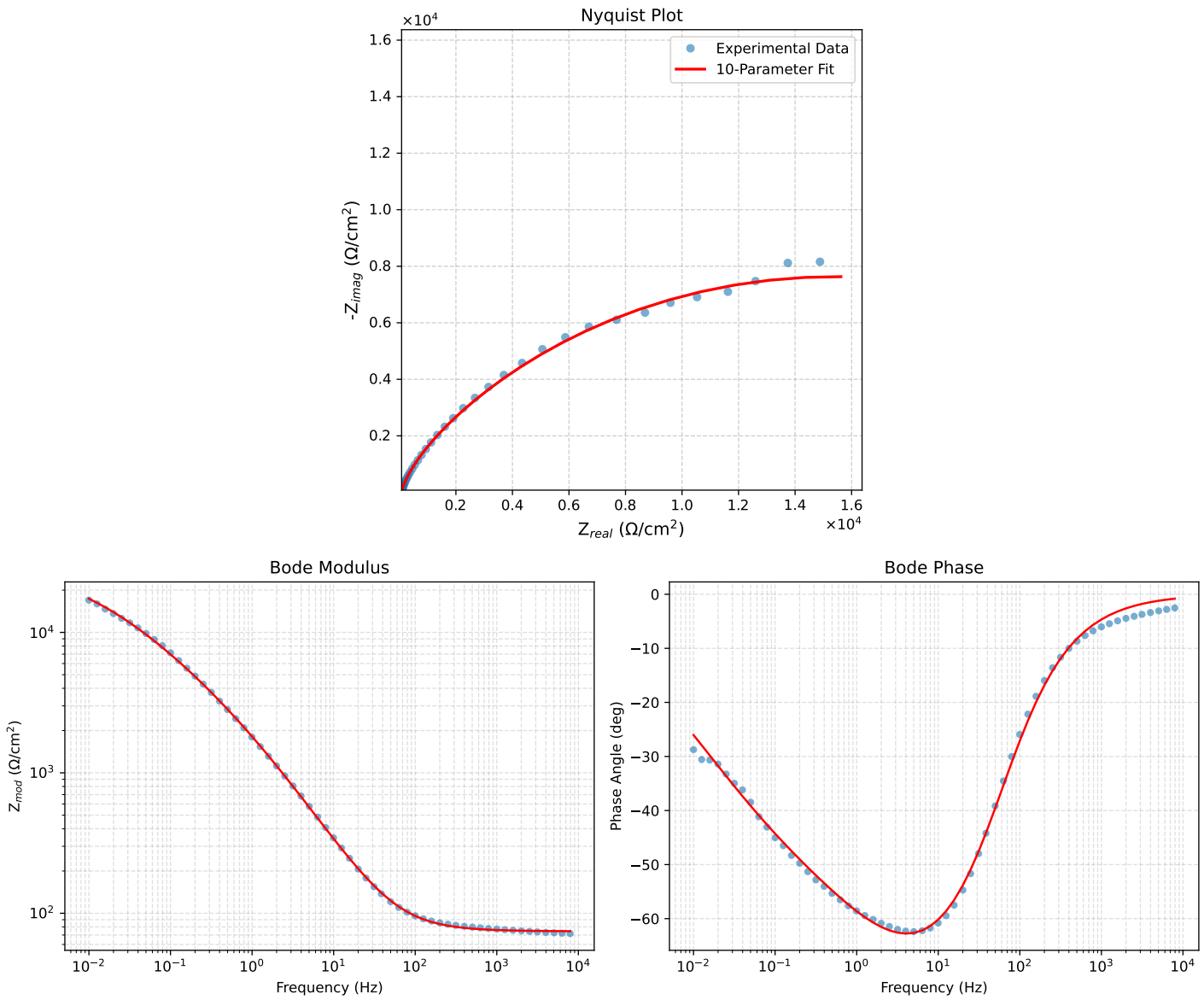

Figure 1: EIS Fit Results for Cauvel_4_NaCl_24H

Analysis Results: 48H

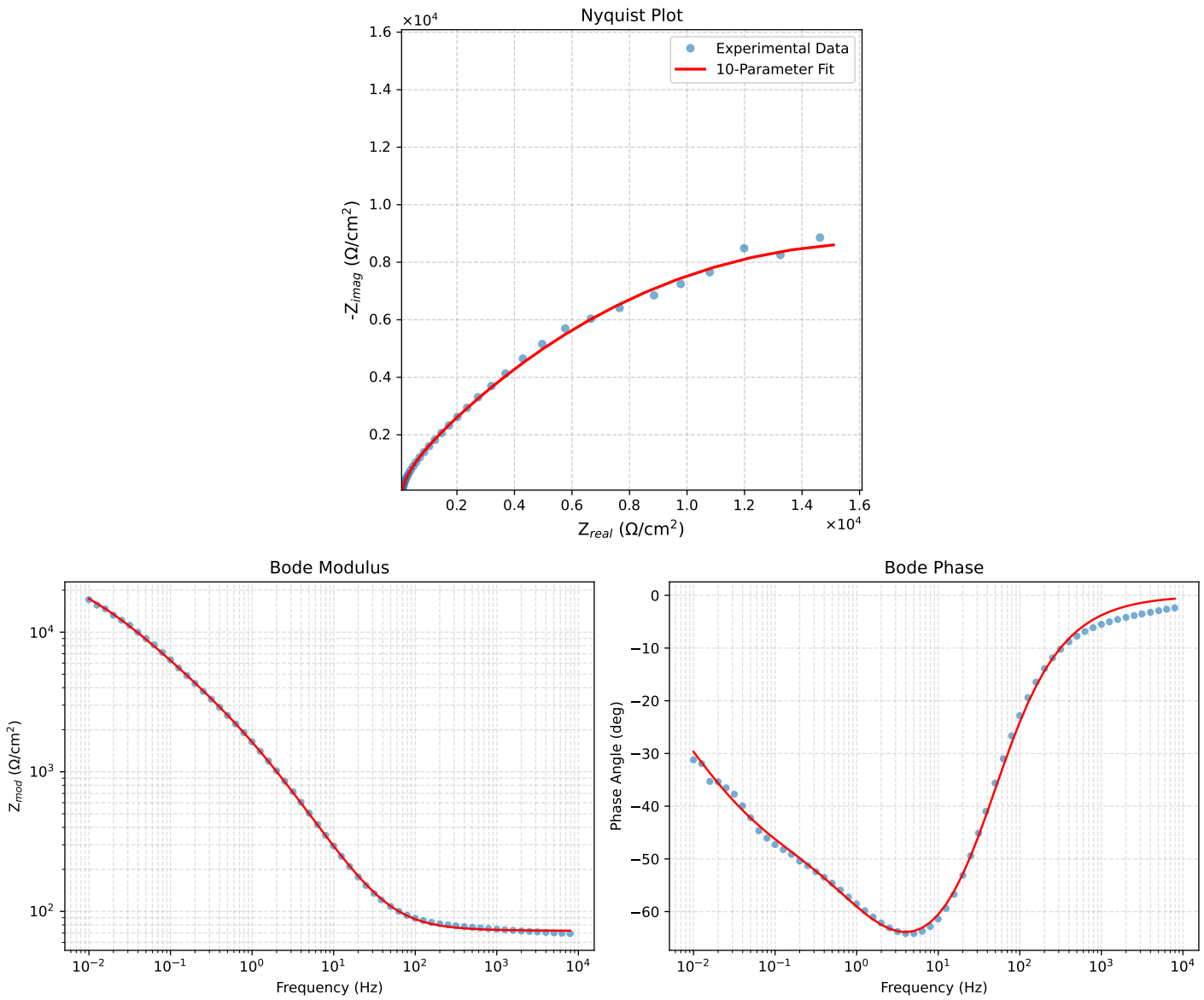

Figure 2: EIS Fit Results for Cauvel_4_NaCl_48H

Analysis Results: 72H

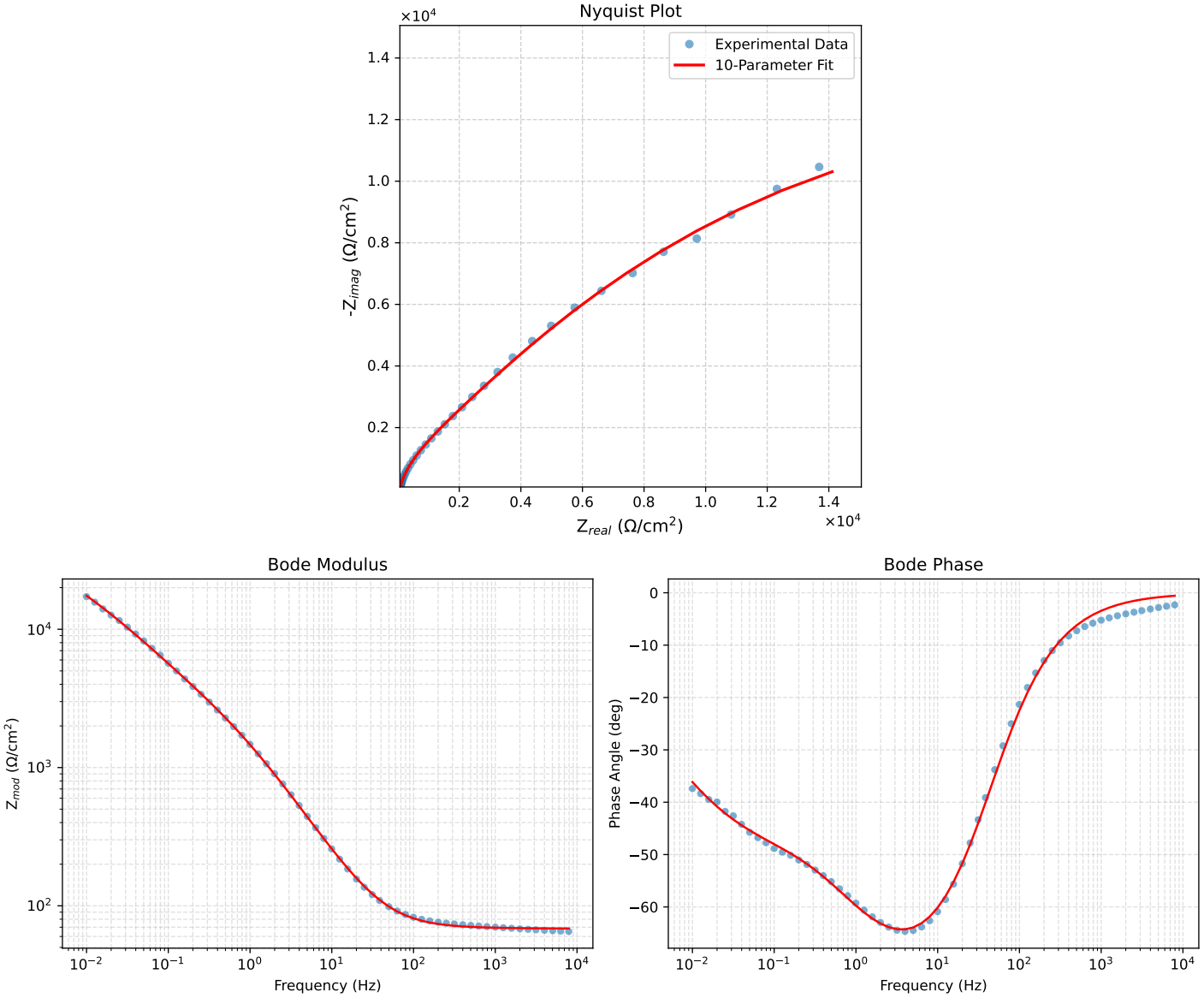

Figure 3: EIS Fit Results for Cauvel_4_NaCl_72H

Analysis Results: 168H

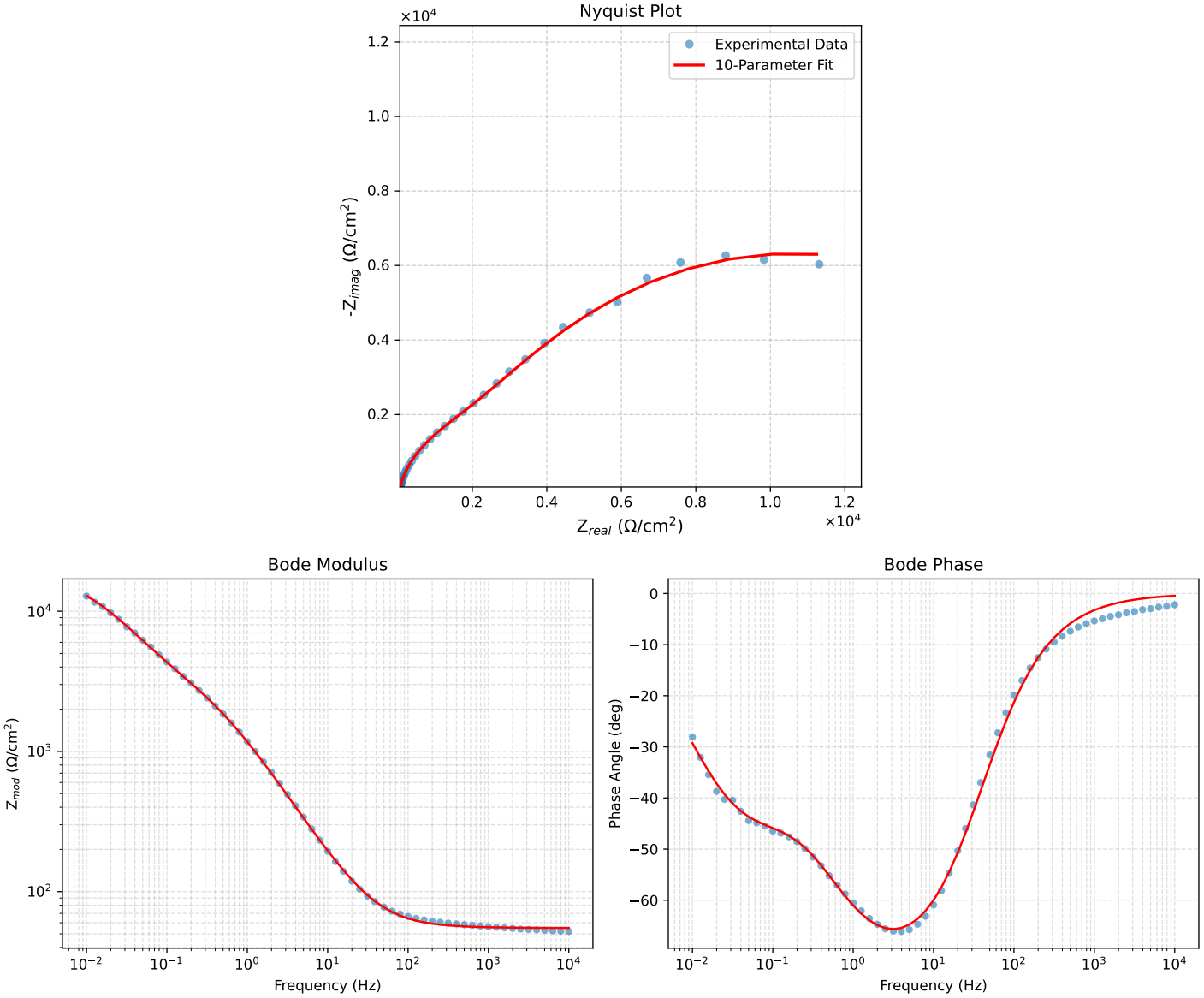

Figure 4: EIS Fit Results for Cauvel_4_NaCl_168H