Comparative EIS Kinetics Report

Model Structure: `R0-p(R1-p(R2-p(R3,CPE3),CPE2),CPE1)`
Used data: altered data, first 0 points removed and points with $freq > 4e+04$ and $freq < 1e-03$ removed

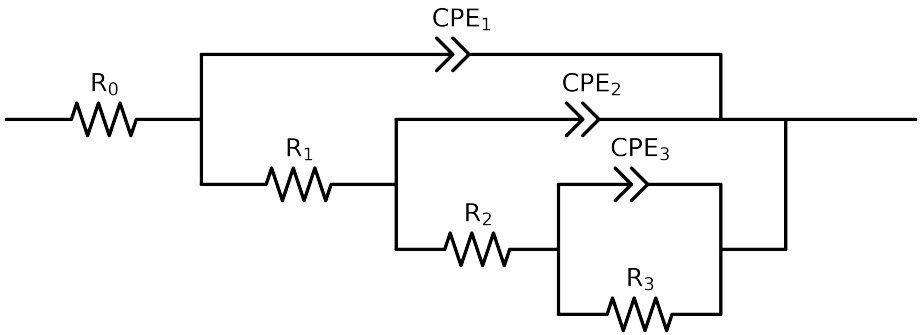

Element	Unit	Bounds	Cauvel_4_NaCl_8H
R_0	Ω	$[1.0e-03, 1.0e+03]$	$7.23e+01 \pm 3.5e-01$
R_1	Ω	$[1.0e+00, 1.0e+03]$	$8.41e+00 \pm 1.0e+00$
R_2	Ω	$[1.0e+00, 1.0e+08]$	$7.55e+03 \pm 5.8e+02$
R_3	Ω	$[1.0e+00, 1.0e+08]$	$2.32e+04 \pm 2.4e+03$
Q_3	Ω^{-1} sec^a	$[1.0e-11, 1.0e-03]$	$1.99e-04 \pm 2.0e-05$
n_3	-	$[5.0e-01, 1.0e+00]$	$5.00e-01 \pm 3.3e-02$
Q_2	Ω^{-1} sec^a	$[1.0e-11, 1.0e-03]$	$8.07e-05 \pm 4.7e-06$
n_2	-	$[5.0e-01, 1.0e+00]$	$8.20e-01 \pm 2.4e-03$
Q_1	Ω^{-1} sec^a	$[1.0e-11, 1.0e-03]$	$4.04e-06 \pm 3.6e-06$
n_1	-	$[5.0e-01, 1.0e+00]$	$9.93e-01 \pm 8.6e-02$
χ^2	-	-	$6.325e-05$

Analysis Results: 8H

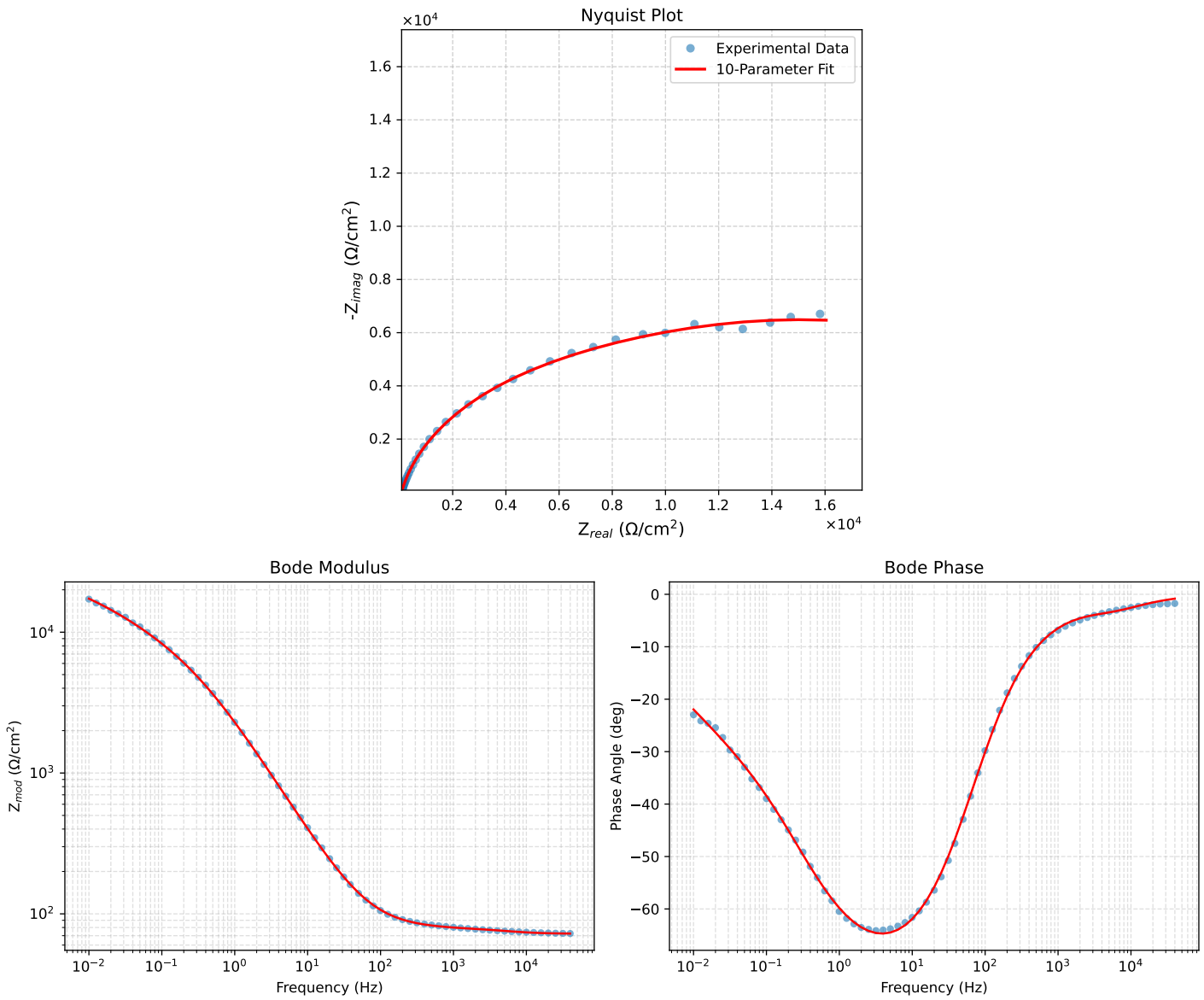

Figure 1: EIS Fit Results for Cauvel_4_NaCl_8H