Comparative EIS Kinetics Report

Model Structure: `R0-p(R1-p(R2-p(R3,CPE3),CPE2),CPE1)`
Used data: altered data, first 6 points removed and points with $freq > 4e+04$ and $freq < 1e-03$ removed

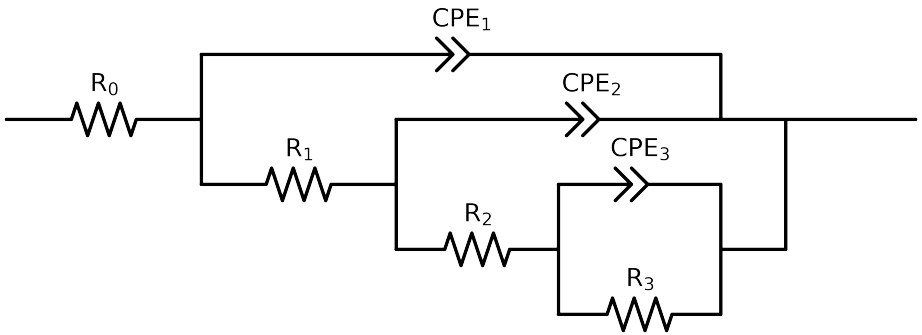

Element	Unit	Bounds	Cauvel_4_NaCl_1H
R_0	Ω	$[1.0e-03, 1.0e+03]$	$7.01e+01 \pm 4.3e-01$
R_1	Ω	$[1.0e+00, 1.0e+03]$	$1.29e+01 \pm 3.7e+00$
R_2	Ω	$[1.0e+00, 1.0e+08]$	$7.35e+03 \pm 1.5e+02$
R_3	Ω	$[1.0e+00, 1.0e+08]$	$3.79e+03 \pm 3.0e+02$
Q_3	Ω^{-1} sec^a	$[1.0e-11, 1.0e-03]$	$3.86e-04 \pm 2.7e-05$
n_3	-	$[5.0e-01, 1.0e+00]$	$1.00e+00 \pm 4.4e-02$
Q_2	Ω^{-1} sec^a	$[1.0e-11, 1.0e-03]$	$2.14e-05 \pm 8.2e-06$
n_2	-	$[5.0e-01, 1.0e+00]$	$8.66e-01 \pm 3.1e-02$
Q_1	Ω^{-1} sec^a	$[1.0e-11, 1.0e-03]$	$1.59e-05 \pm 8.9e-06$
n_1	-	$[5.0e-01, 1.0e+00]$	$8.40e-01 \pm 4.3e-02$
χ^2	-	-	$1.254e-04$

Analysis Results: 1H

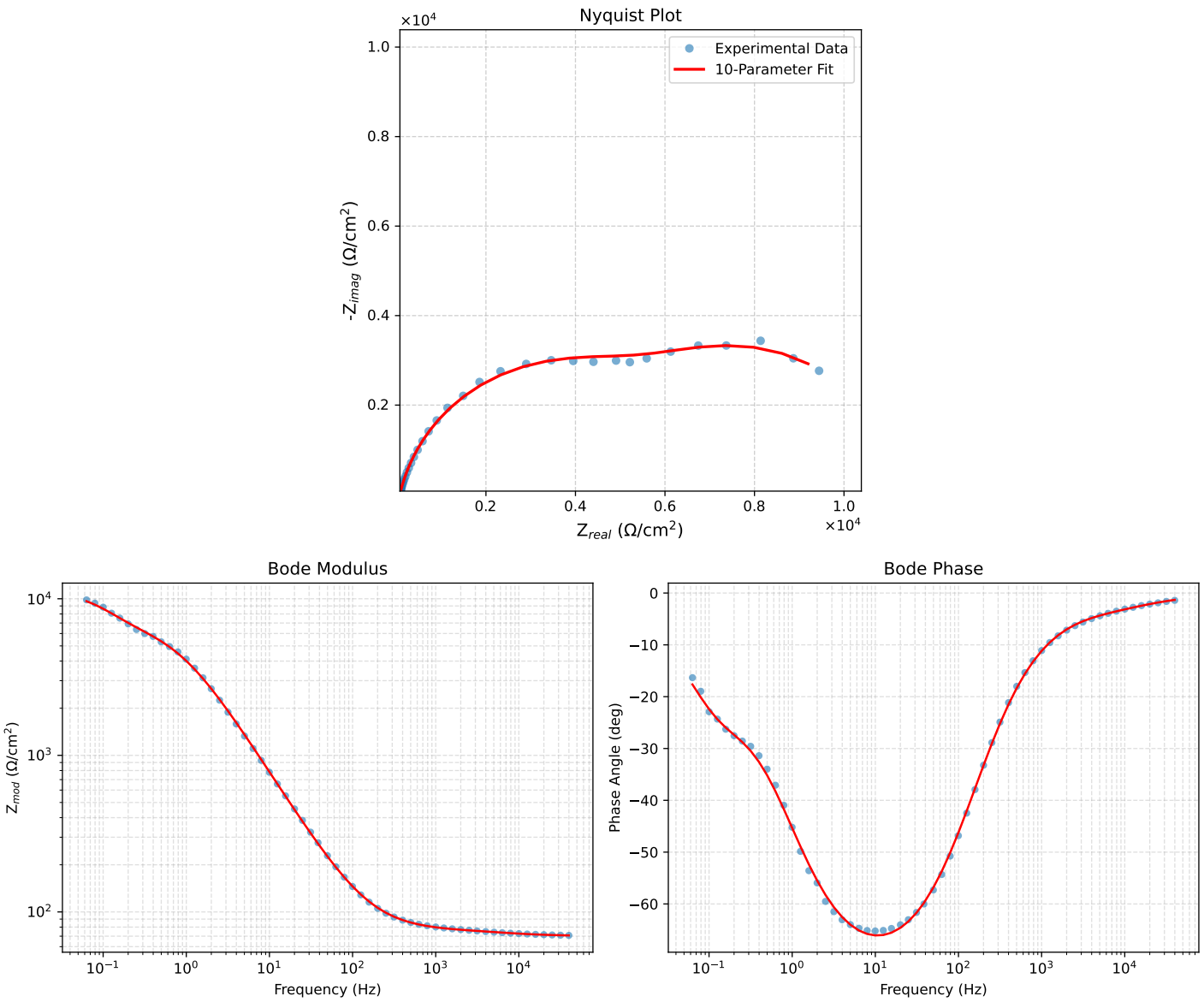

Figure 1: EIS Fit Results for Cauvel_4_NaCl_1H