Comparative EIS Kinetics Report

Model Structure: `R0-p(R1,CPE1)`
Used data: altered data, first 4 points removed and points with $freq > 2e+04$ and $freq < 1e-03$ removed

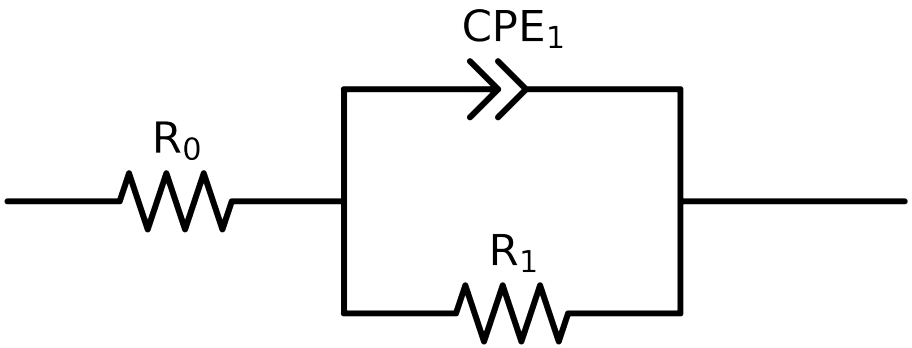

Element	Unit	Bounds	Cauvel_4_NaVO3_24H	Cauvel_4_NaVO3_48H	Cauvel_4_NaVO3_72H
R_0	Ω	$[1.0e-03, 1.0e+03]$	$6.66e+01 \pm 2.4e-01$	$6.87e+01 \pm 2.7e-01$	$6.58e+01 \pm 2.4e-01$
R_1	Ω	$[1.0e+00, 1.0e+12]$	$3.14e+05 \pm 2.4e+03$	$3.10e+05 \pm 2.7e+03$	$3.29e+05 \pm 2.7e+03$
Q_1	Ω^{-1} $\sec^a$	$[1.0e-11, 1.0e-03]$	$1.05e-05 \pm 3.2e-08$	$1.10e-05 \pm 3.7e-08$	$1.08e-05 \pm 3.4e-08$
n_1	-	$[5.0e-01, 1.0e+00]$	$8.47e-01 \pm 6.3e-04$	$8.36e-01 \pm 7.0e-04$	$8.36e-01 \pm 6.4e-04$
χ^2	-	-	$1.389e-04$	$1.748e-04$	$1.486e-04$

Analysis Results: 24H

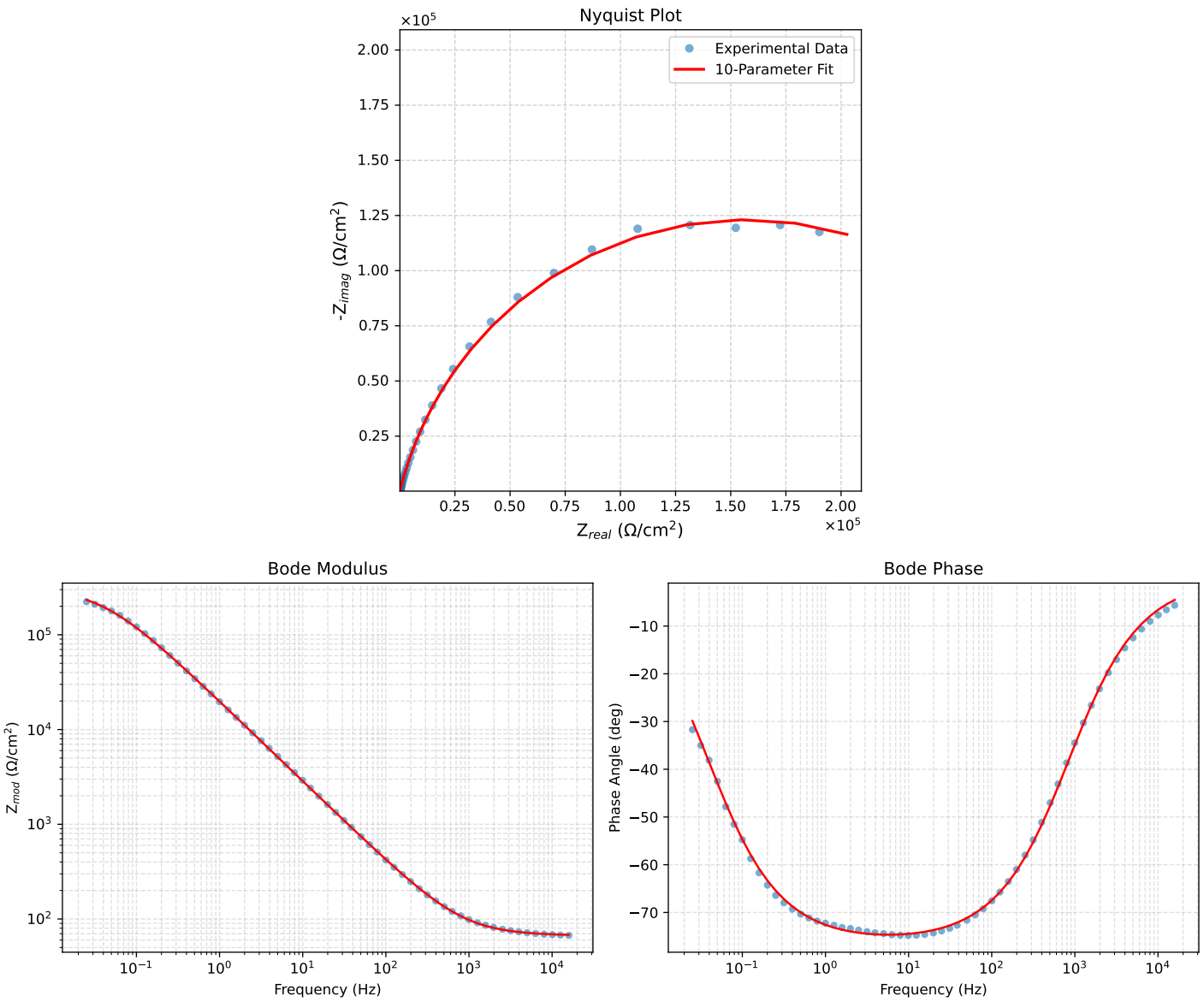

Figure 1: EIS Fit Results for Cauvel_4_NaVO3_24H

Analysis Results: 48H

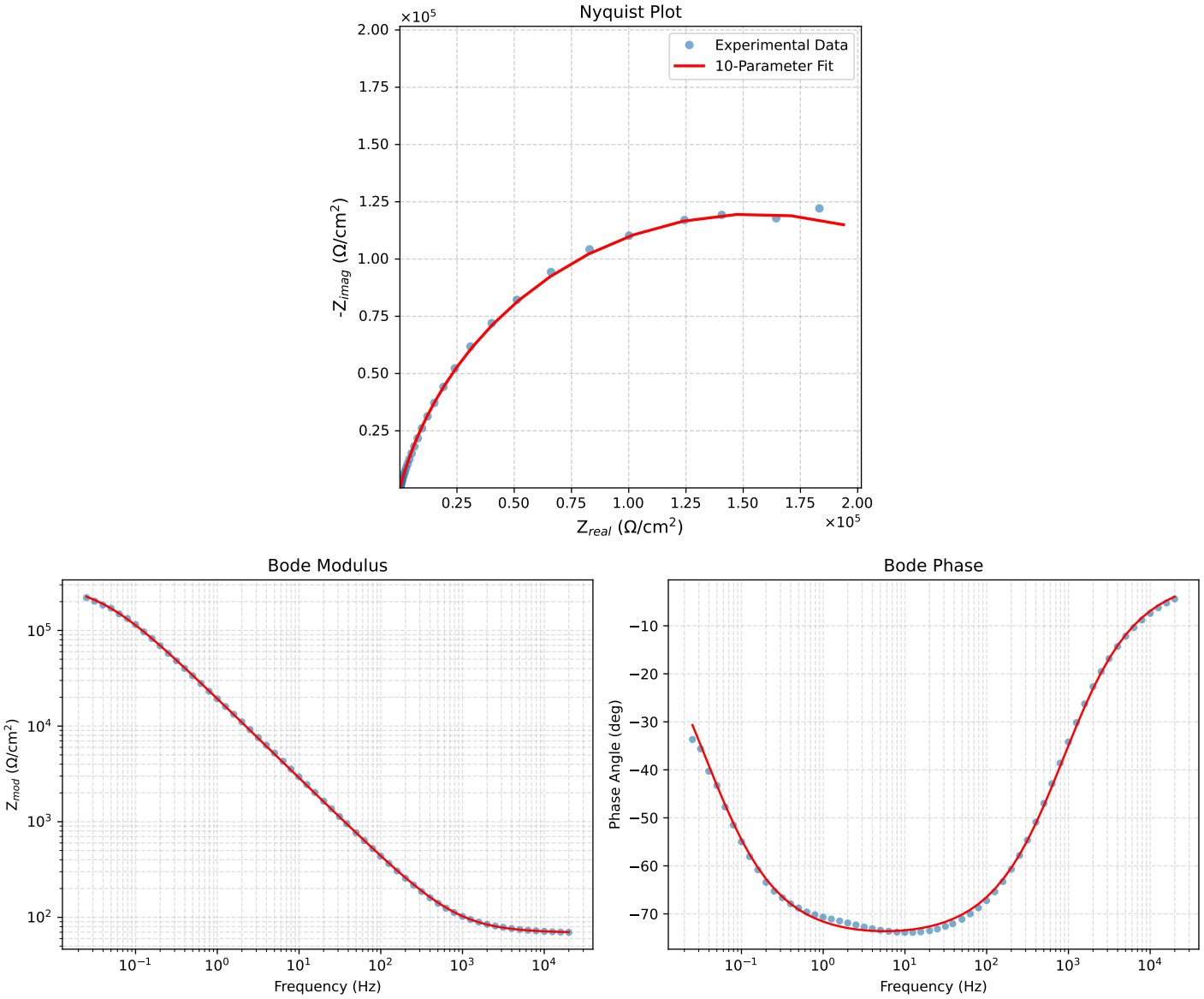

Figure 2: EIS Fit Results for Cauvel_4_NaVO3_48H

Analysis Results: 72H

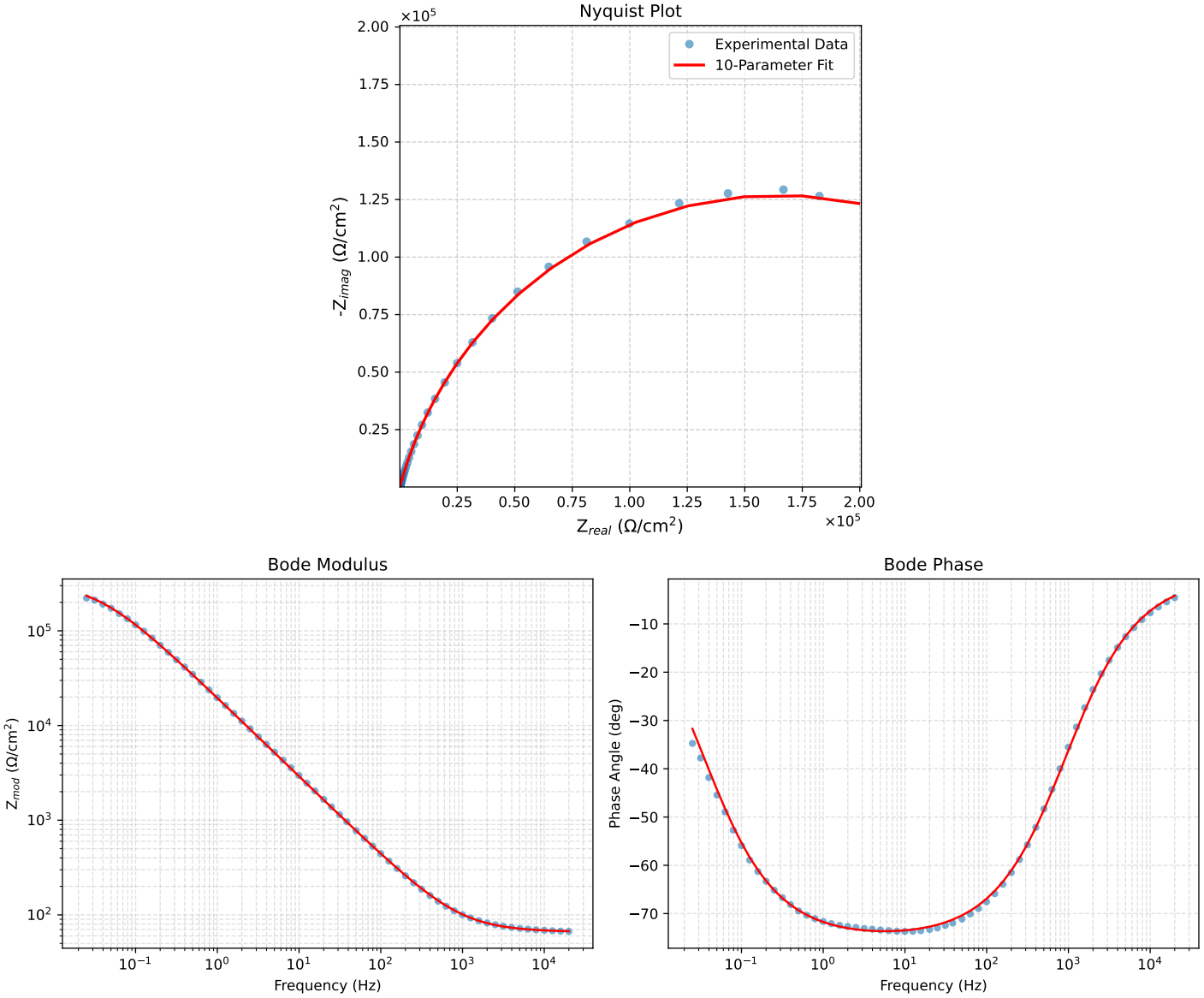

Figure 3: EIS Fit Results for Cauvel_4_NaVO3_72H