Comparative EIS Kinetics Report

Model Structure: `R0-p(R1,CPE1)`
Used data: altered data, first 6 points removed and points with $freq > 2e+04$ removed

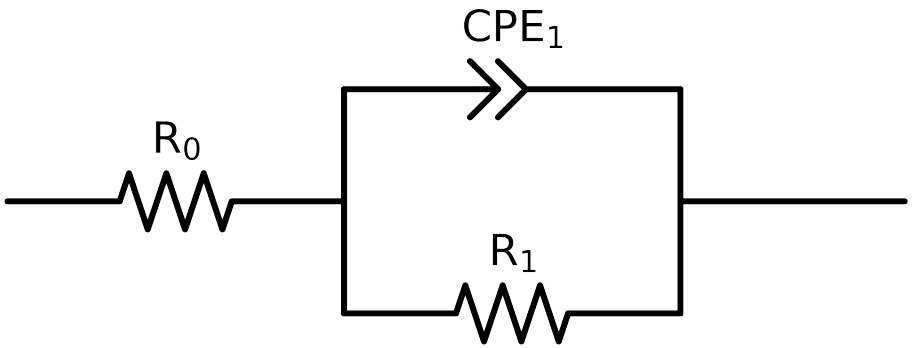

Element	Unit	Bounds	Cauvel_4_NaVO3_1H	Cauvel_4_NaVO3_4H	Cauvel_4_NaVO3_8H
R_0	Ω	$[1.0e-03, 1.0e+03]$	$7.37e+01 \pm 5.1e-01$	$6.62e+01 \pm 4.0e-01$	$6.59e+01 \pm 3.2e-01$
R_1	Ω	$[1.0e+00, 1.0e+08]$	$1.79e+05 \pm 3.4e+03$	$2.42e+05 \pm 3.2e+03$	$3.11e+05 \pm 3.9e+03$
Q_1	$\Omega^{-1}\ \sec^a$	$[1.0e-11, 1.0e-03]$	$8.41e-06 \pm 6.6e-08$	$9.26e-06 \pm 5.3e-08$	$9.60e-06 \pm 4.2e-08$
n_1	-	$[5.0e-01, 1.0e+00]$	$8.96e-01 \pm 1.6e-03$	$8.78e-01 \pm 1.2e-03$	$8.68e-01 \pm 9.1e-04$
χ^2	-	-	$6.572e-04$	$4.327e-04$	$2.709e-04$

Analysis Results: 1H

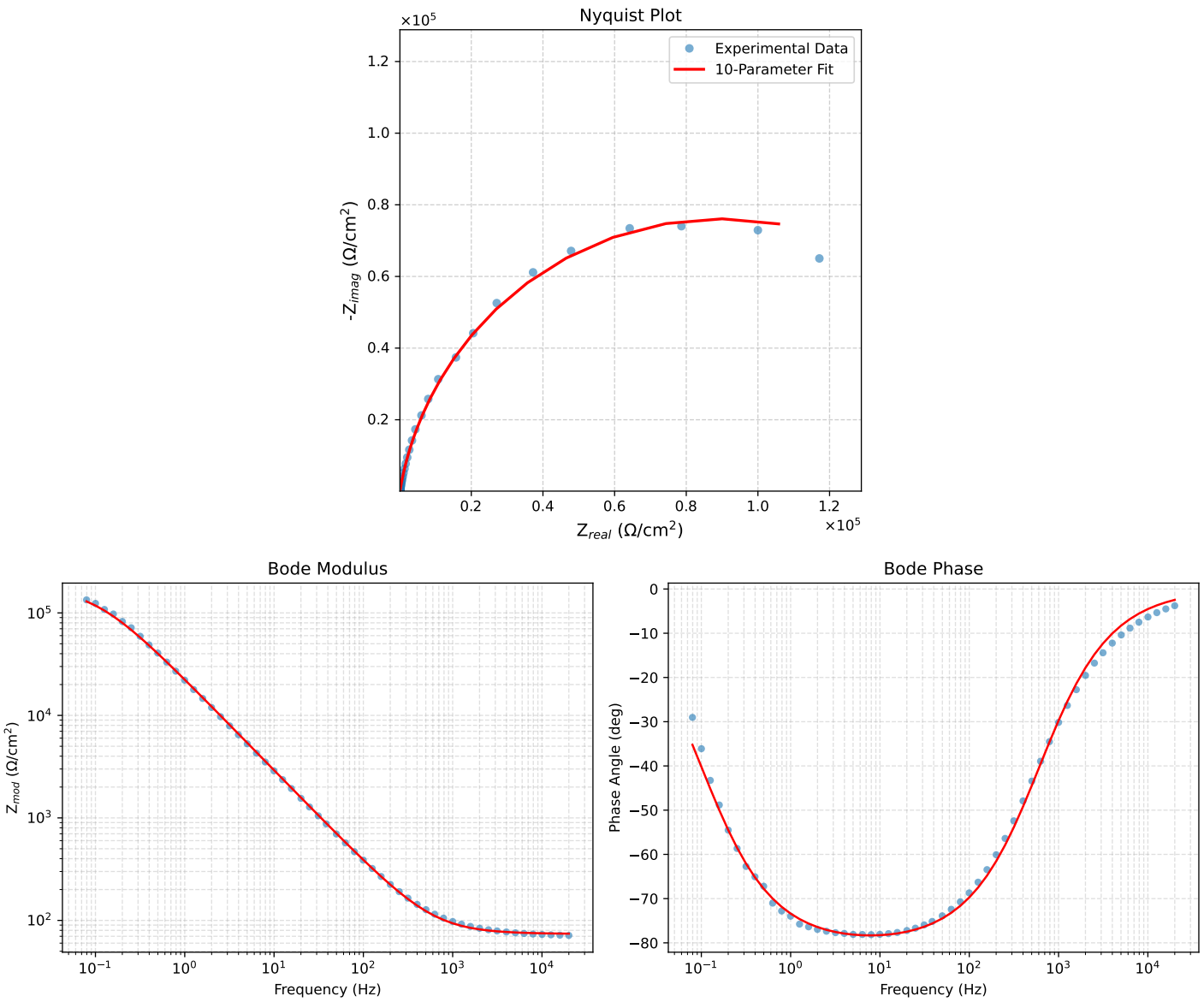

Figure 1: EIS Fit Results for Cauvel_4_NaVO3_1H

Analysis Results: 4H

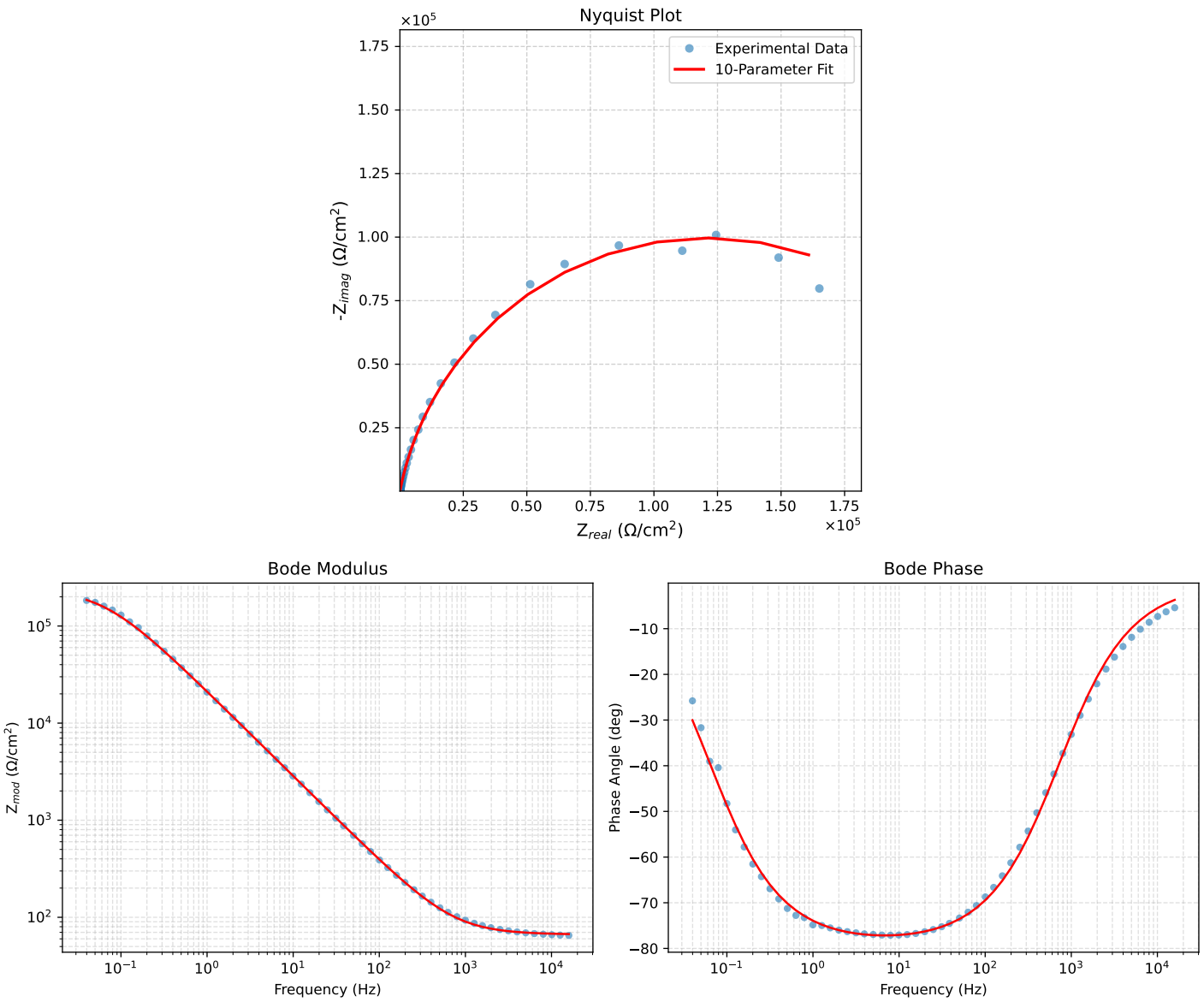

Figure 2: EIS Fit Results for Cauvel_4_NaVO3_4H

Analysis Results: 8H

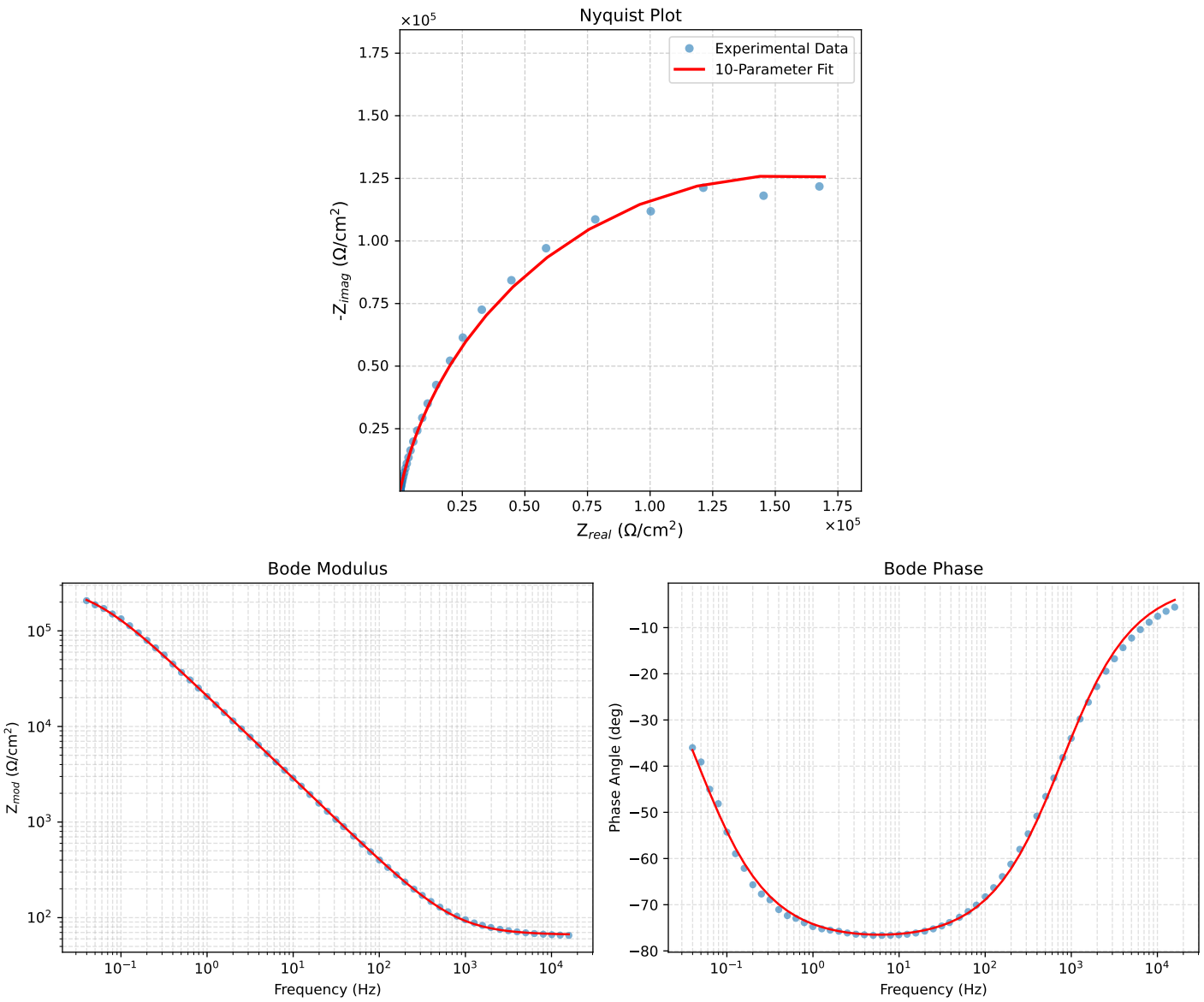

Figure 3: EIS Fit Results for Cauvel_4_NaVO3_8H