Comparative EIS Kinetics Report

Model Structure: `R0-p(R1-p(R2,CPE2),CPE1)`
Used data: original data

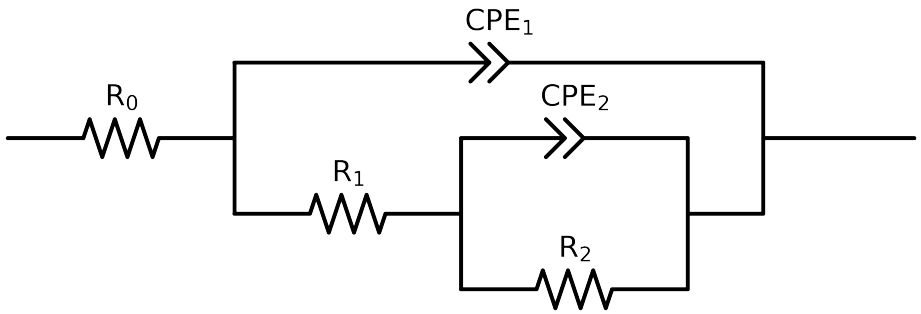

Element	Unit	Bounds	Cauvel_4_NaVO3_1H	Cauvel_4_NaVO3_4H	Cauvel_4_NaVO3_8H
R_0	Ω	$[1.0e-03, 1.0e+03]$	$7.10e+01 \pm 8.7e-01$	$6.50e+01 \pm 4.2e-01$	$6.48e+01 \pm 3.1e-01$
R_1	Ω	$[1.0e+00, 1.0e+08]$	$2.48e+02 \pm 4.1e+02$	$2.45e+05 \pm 6.8e+05$	$3.01e+05 \pm 6.0e+03$
R_2	Ω	$[1.0e+00, 1.0e+08]$	$1.60e+05 \pm 2.5e+03$	$1.40e+00 \pm 6.8e+05$	$6.39e+04 \pm 3.0e+05$
Q_2	$\Omega^{-1}\ \mathrm{sec}^a$	$[1.0e-11, 1.0e-03]$	$2.35e-06 \pm 5.5e-06$	$4.77e-09 \pm 3.5e+05$	$1.00e-03 \pm 2.1e-03$
n_2	-	$[5.0e-01, 1.0e+00]$	$9.03e-01 \pm 1.9e-01$	$8.52e-01 \pm 6.8e-10$	$1.00e+00 \pm 7.6e-01$
Q_1	$\Omega^{-1}\ \mathrm{sec}^a$	$[1.0e-11, 1.0e-03]$	$5.56e-06 \pm 5.5e-06$	$9.26e-06 \pm 1.1e-05$	$9.58e-06 \pm 6.3e-08$
n_1	-	$[5.0e-01, 1.0e+00]$	$9.18e-01 \pm 9.3e-02$	$8.77e-01 \pm 2.8e-02$	$8.68e-01 \pm 1.3e-03$
χ^2	-	-	$1.538e-03$	$7.052e-04$	$4.486e-04$

Analysis Results: 1H

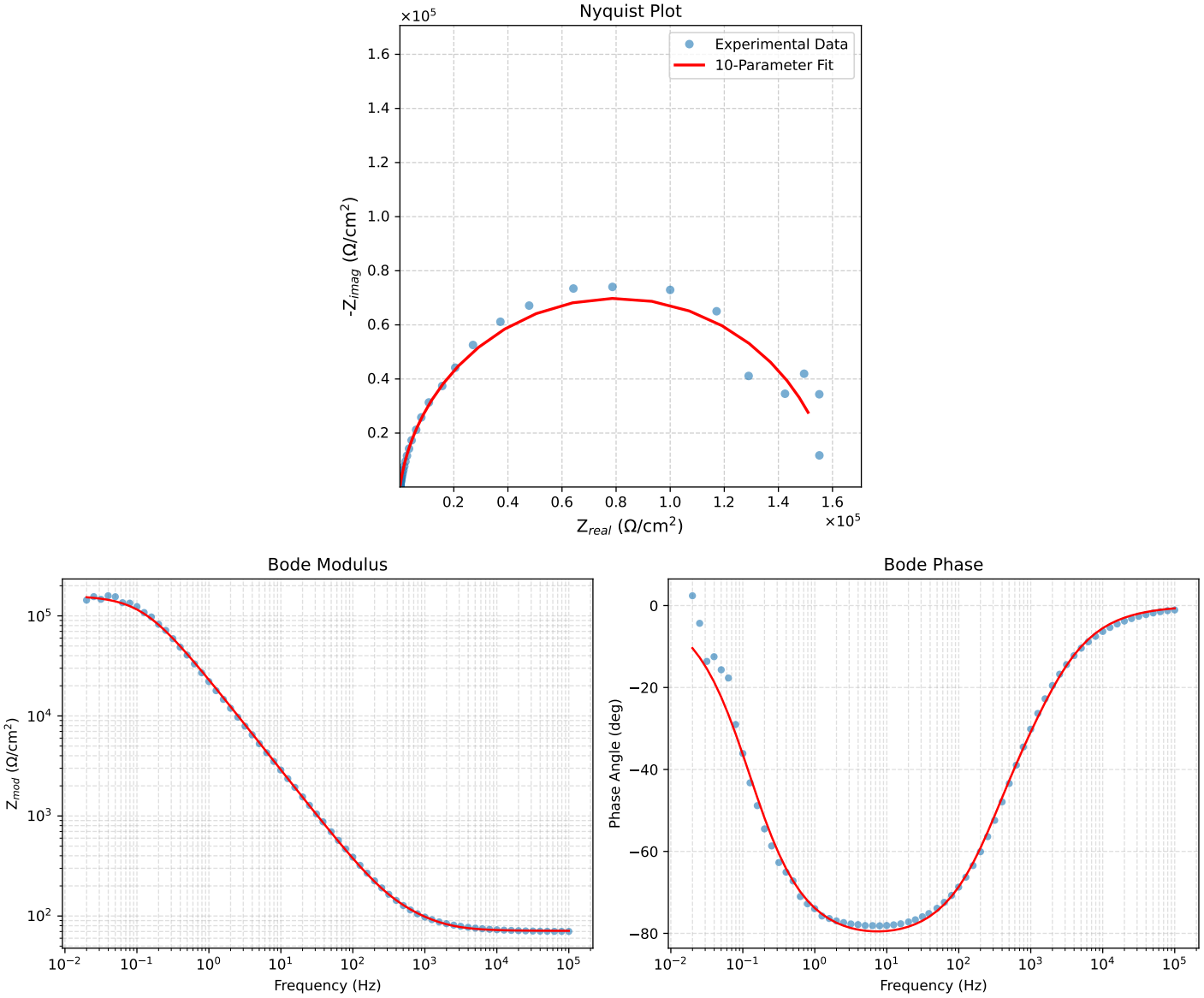

Figure 1: EIS Fit Results for Cauvel_4_NaVO3_1H

Analysis Results: 4H

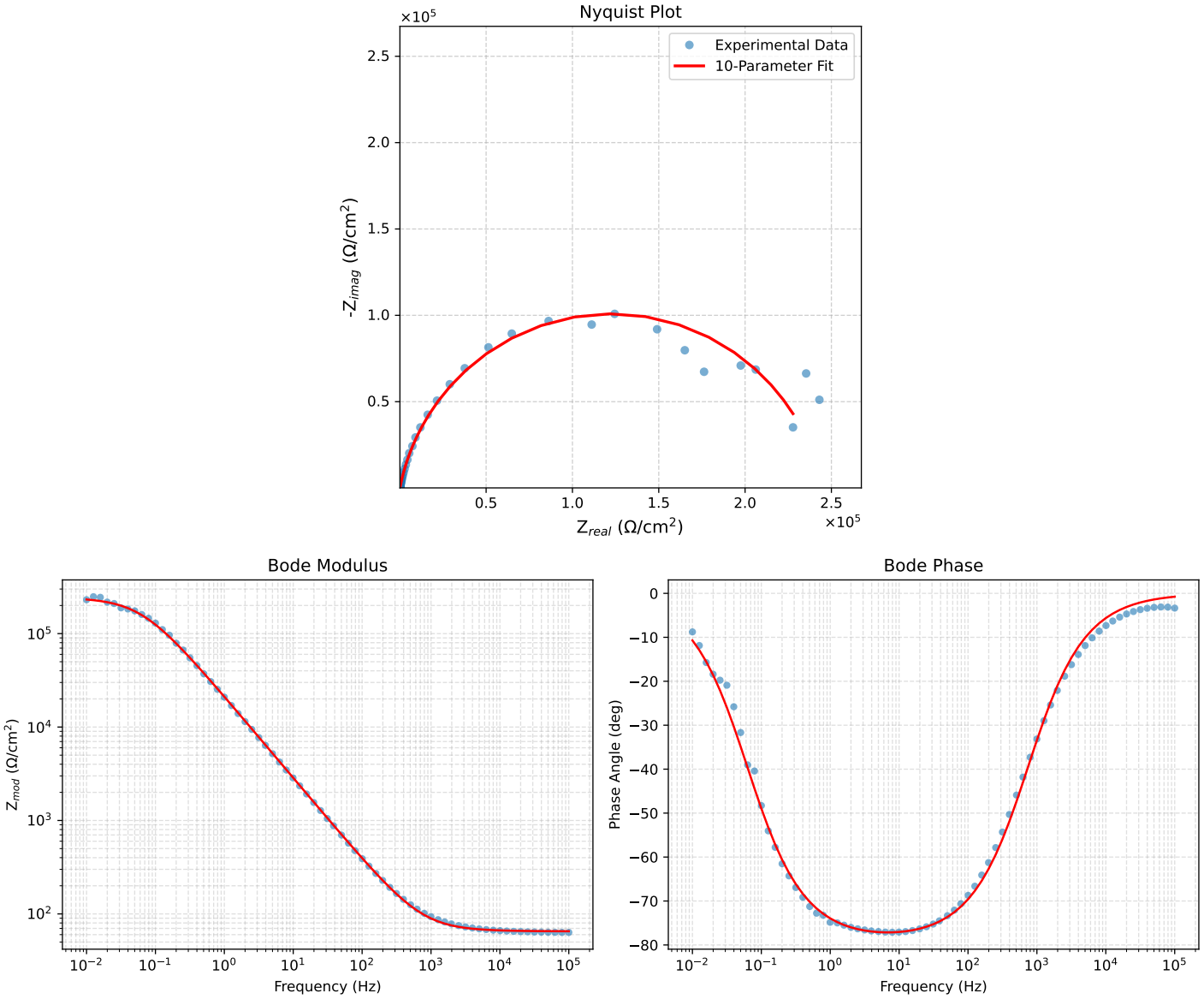

Figure 2: EIS Fit Results for Cauvel_4_NaVO3_4H

Analysis Results: 8H

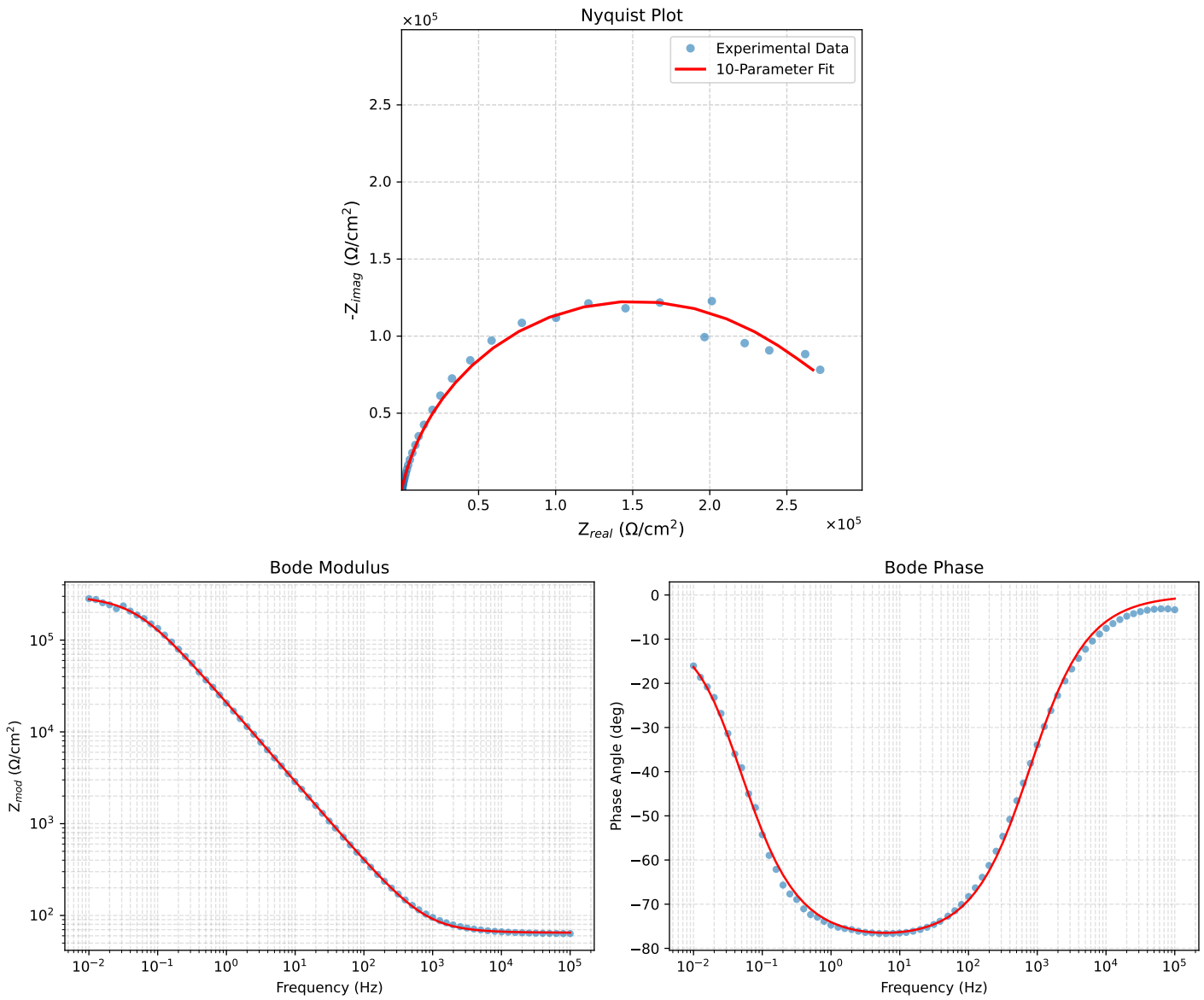

Figure 3: EIS Fit Results for Cauvel_4_NaVO3_8H