Comparative EIS Kinetics Report

Model Structure: `R0-p(R1-p(R2,CPE2),CPE1)`
Used data: altered data, first 0 points removed and points with $freq > 1e+04$ and $freq < 1e-01$ removed

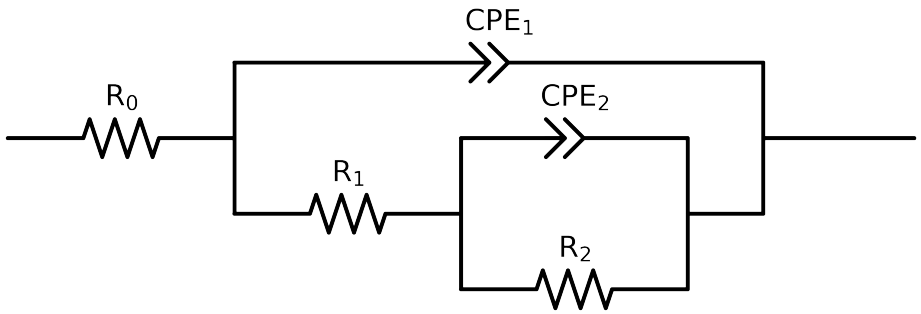

Element	Unit	Bounds	Cauvel_3_Mo_1H	Cauvel_3_Mo_4H	Cauvel_3_Mo_8H
R_0	Ω	$[1.0e-03, 1.0e+03]$	$5.86e+01 \pm 4.3e-01$	$5.60e+01 \pm 4.0e-01$	$5.71e+01 \pm 3.4e-01$
R_1	Ω	$[1.0e+00, 1.0e+08]$	$6.58e+03 \pm 1.9e+02$	$5.58e+03 \pm 3.6e+02$	$5.35e+03 \pm 2.6e+02$
R_2	Ω	$[1.0e+00, 1.0e+12]$	$8.98e+03 \pm 1.6e+03$	$8.39e+03 \pm 4.2e+03$	$1.13e+04 \pm 3.9e+03$
Q_2	Ω^{-1} sec^a	$[1.0e-11, 1.0e-03]$	$2.50e-04 \pm 1.2e-05$	$3.54e-04 \pm 3.8e-05$	$3.11e-04 \pm 1.8e-05$
n_2	-	$[5.0e-01, 1.0e+00]$	$1.00e+00 \pm 6.7e-02$	$8.06e-01 \pm 1.5e-01$	$9.06e-01 \pm 9.2e-02$
Q_1	Ω^{-1} sec^a	$[1.0e-11, 1.0e-03]$	$3.23e-05 \pm 6.6e-07$	$5.58e-05 \pm 1.4e-06$	$7.10e-05 \pm 1.5e-06$
n_1	-	$[5.0e-01, 1.0e+00]$	$8.96e-01 \pm 3.9e-03$	$8.92e-01 \pm 5.0e-03$	$8.91e-01 \pm 4.2e-03$
χ^2	-	-	$7.415e-04$	$7.859e-04$	$5.669e-04$

Analysis Results: 1H

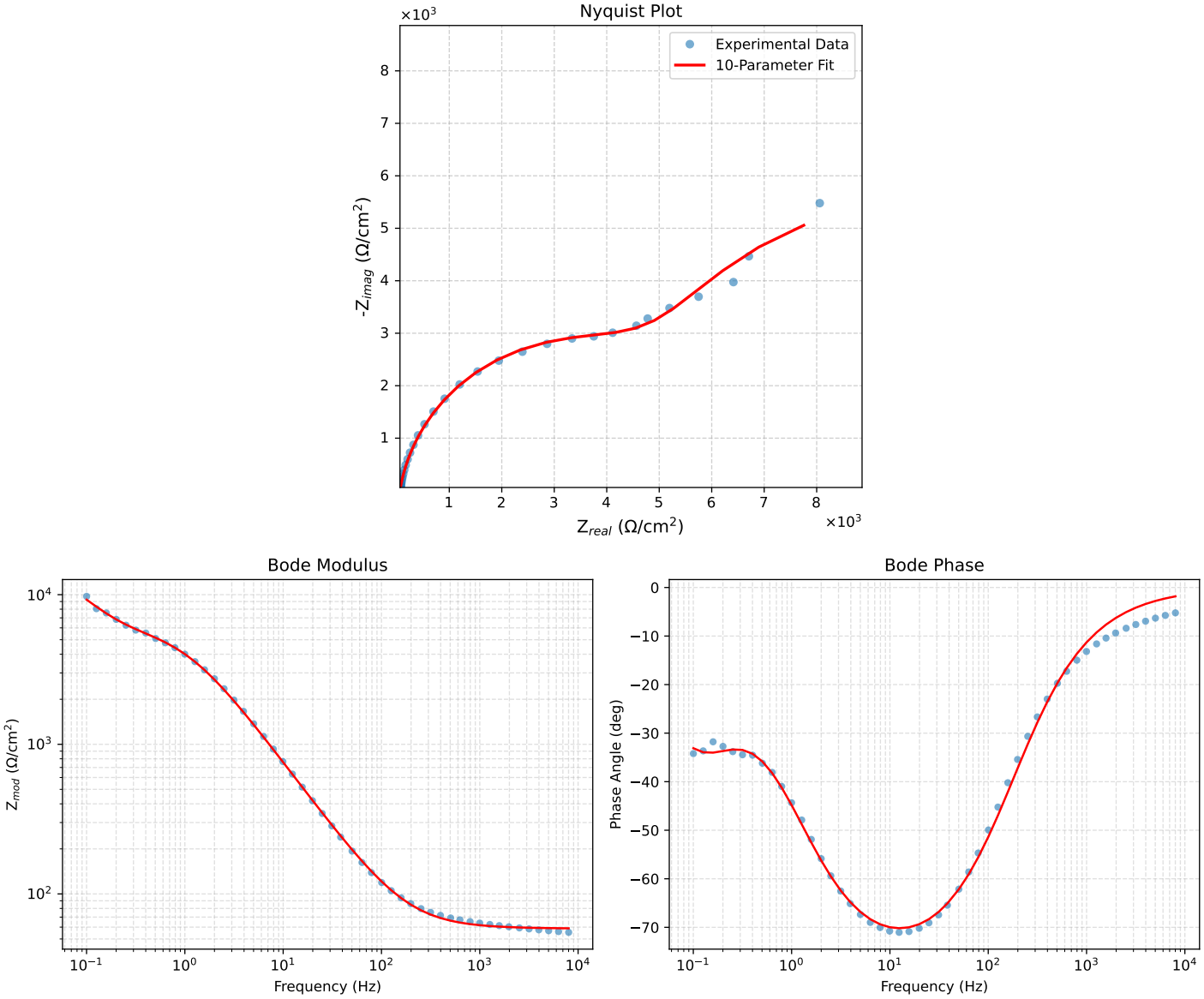

Figure 1: EIS Fit Results for Cauvel_3_Mo_1H

Analysis Results: 4H

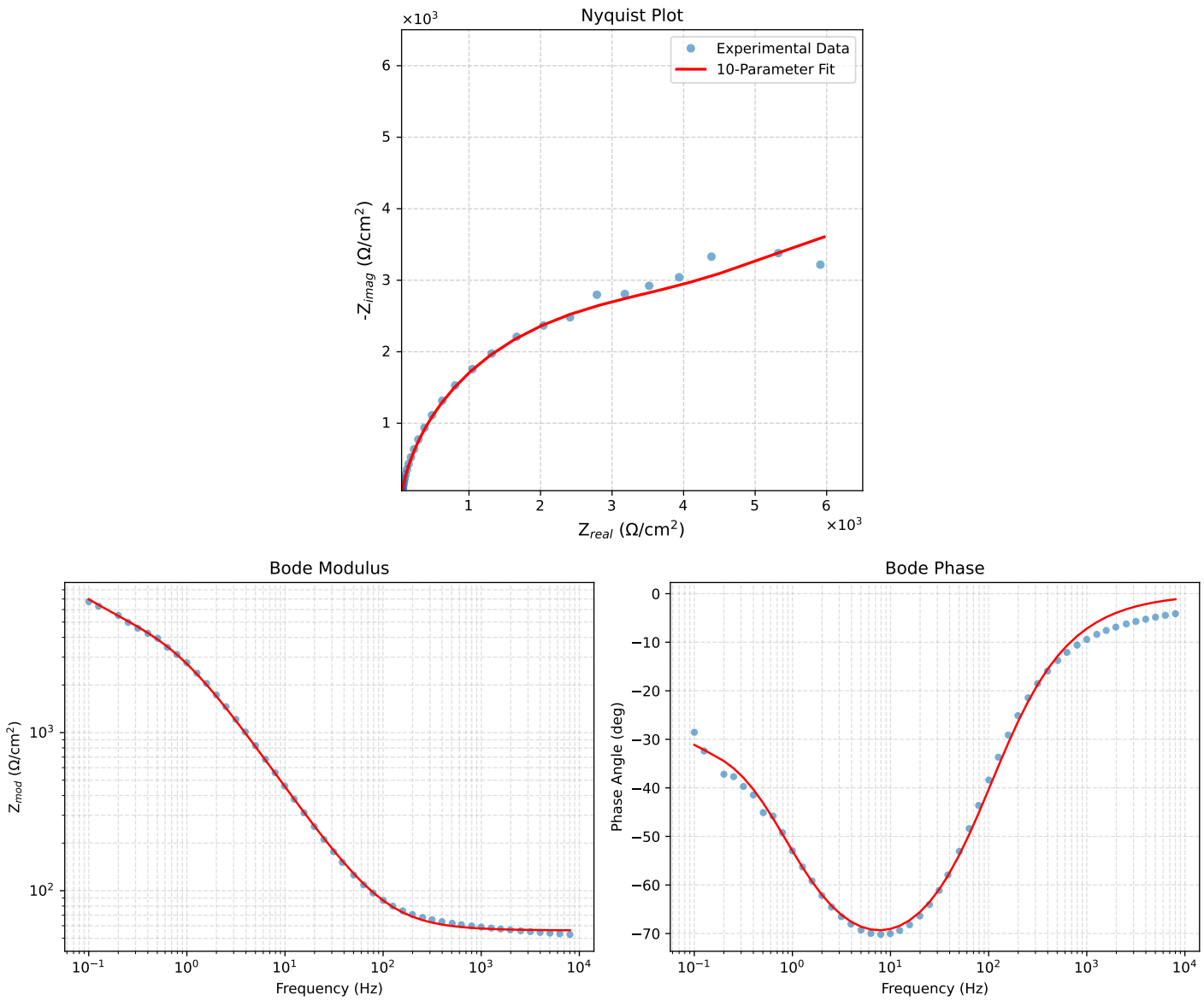

Figure 2: EIS Fit Results for Cauvel_3_Mo_4H

Analysis Results: 8H

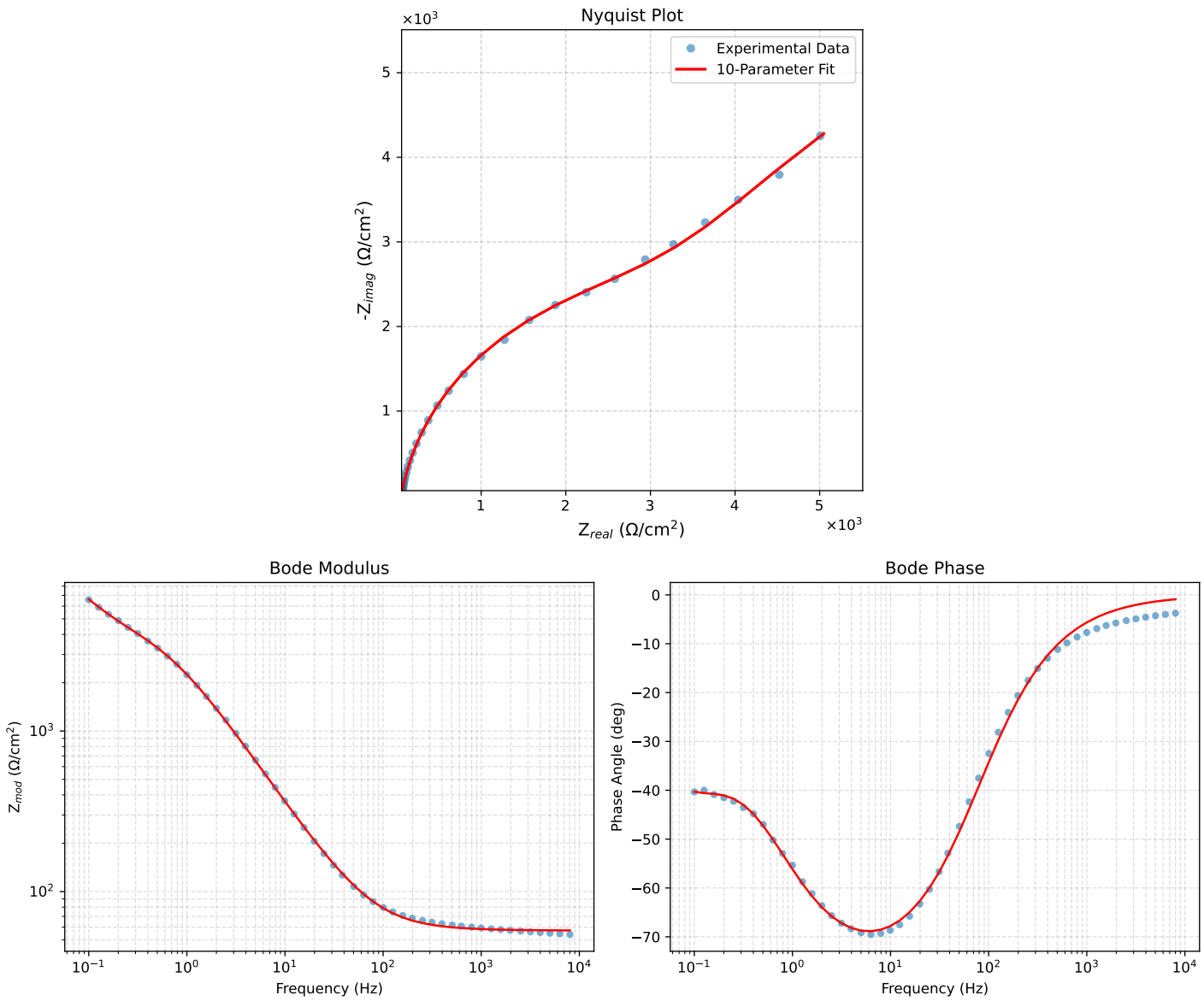

Figure 3: EIS Fit Results for Cauvel_3_Mo_8H