Comparative EIS Kinetics Report

Model Structure: `R0-p(R1-p(R2,CPE2),CPE1)`
Used data: altered data, first 6 points removed and points with $freq > 1e+04$ and $freq < 1e-03$ removed

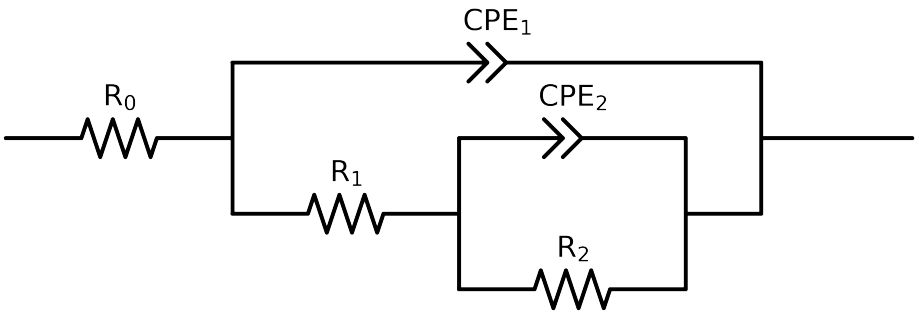

Element	Unit	Bounds	Cauvel_3_Mo_24H
R_0	Ω	$[1.0e-03, 1.0e+03]$	$5.73e+01 \pm 3.1e-01$
R_1	Ω	$[1.0e+00, 1.0e+08]$	$6.61e+03 \pm 3.3e+02$
R_2	Ω	$[1.0e+00, 1.0e+12]$	$1.08e+04 \pm 1.9e+03$
Q_2	Ω^{-1} $\sec^a$	$[1.0e-11, 1.0e-03]$	$2.82e-04 \pm 2.2e-05$
n_2	-	$[5.0e-01, 1.0e+00]$	$9.48e-01 \pm 7.1e-02$
Q_1	Ω^{-1} $\sec^a$	$[1.0e-11, 1.0e-03]$	$9.12e-05 \pm 1.6e-06$
n_1	-	$[5.0e-01, 1.0e+00]$	$8.99e-01 \pm 3.9e-03$
χ^2	-	-	$5.187e-04$

Analysis Results: 24H

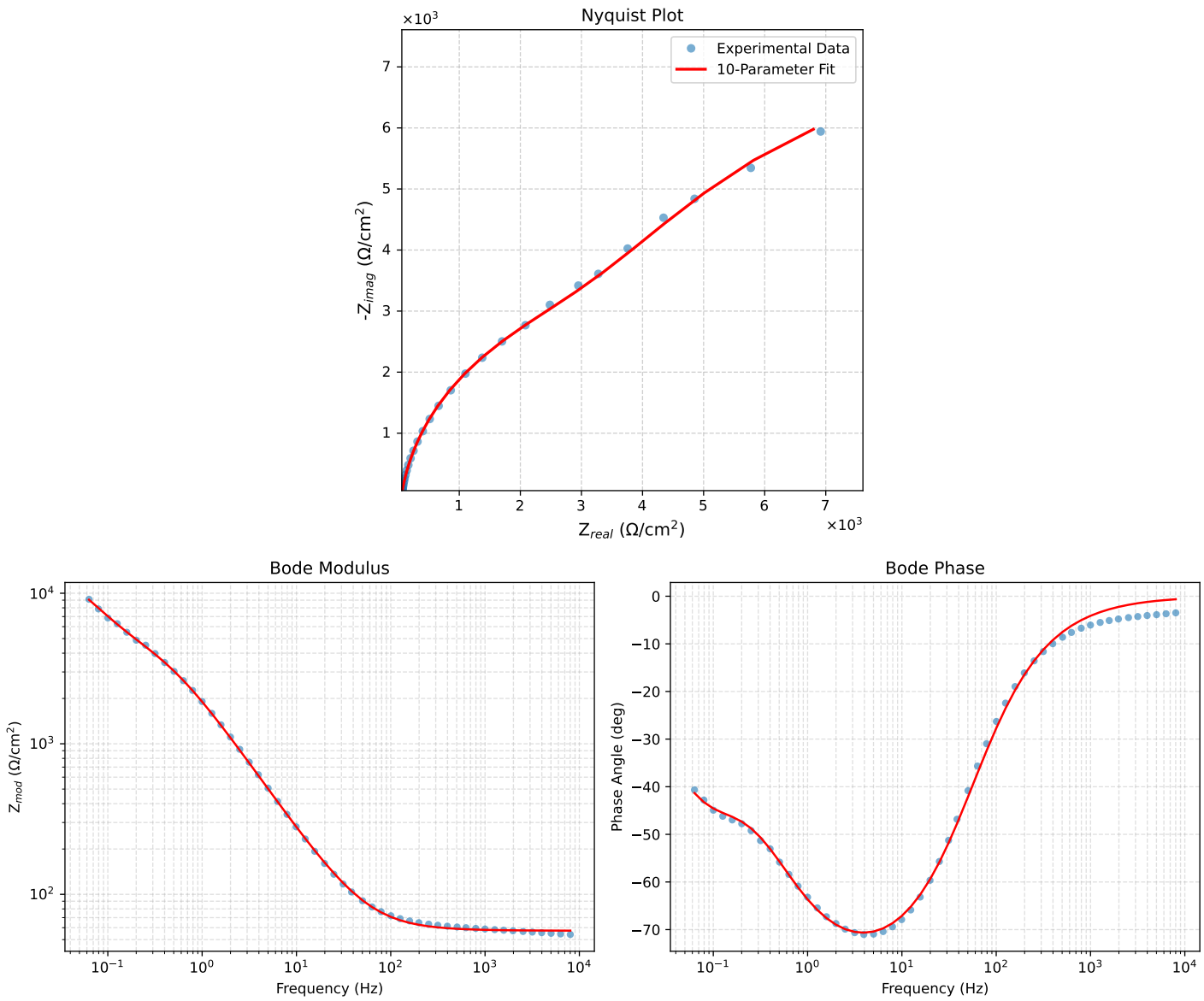

Figure 1: EIS Fit Results for Cauvel_3_Mo_24H