Comparative EIS Kinetics Report

Model Structure: `R0-p(R1-p(R2,CPE2),CPE1)`
Used data: altered data, first 3 points removed and points with $freq > 1e+04$ and $freq < 1e-03$ removed

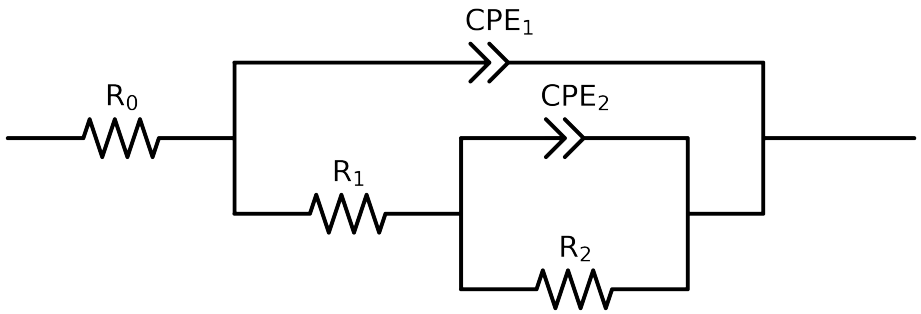

Element	Unit	Bounds	Cauvel_1_Lcystine_8H	Cauvel_1_Lcystine_24H	Cauvel_1_Lcystine_48H	Cauvel_1_Lcystine_72H	Cauvel_1_Lcystine_168H
R_0	Ω	$[1.0e-03, 1.0e+03]$	$7.99e+01 \pm 5.9e-01$	$7.57e+01 \pm 1.5e+00$	$7.90e+01 \pm 8.0e-01$	$8.08e+01 \pm 3.3e-01$	$8.18e+01 \pm 1.5e+00$
R_1	Ω	$[1.0e+00, 1.0e+08]$	$2.20e+05 \pm 1.2e+03$	$7.63e+01 \pm 1.1e+02$	$2.17e+02 \pm 1.1e+02$	$3.07e+05 \pm 4.7e+03$	$3.42e+02 \pm 3.0e+02$
R_2	Ω	$[1.0e+00, 1.0e+08]$	$3.00e+02 \pm 1.2e+03$	$3.17e+05 \pm 3.0e+03$	$2.47e+05 \pm 1.6e+03$	$1.00e+08 \pm 4.1e-05$	$4.18e+05 \pm 6.7e+03$
Q_2	Ω^{-1} sec^a	$[1.0e-11, 1.0e-03]$	$6.05e-05 \pm 7.4e-02$	$2.93e-06 \pm 4.7e-06$	$5.68e-07 \pm 3.2e-07$	$3.17e-04 \pm 1.1e-04$	$3.76e-07 \pm 3.9e-07$
n_2	-	$[5.0e-01, 1.0e+00]$	$9.55e-01 \pm 2.3e+02$	$8.61e-01 \pm 1.0e-01$	$9.84e-01 \pm 3.7e-02$	$1.00e+00 \pm 1.7e-01$	$1.00e+00 \pm 7.5e-02$
Q_1	Ω^{-1} sec^a	$[1.0e-11, 1.0e-03]$	$9.43e-06 \pm 1.4e-07$	$7.09e-06 \pm 4.7e-06$	$9.61e-06 \pm 3.3e-07$	$9.84e-06 \pm 3.7e-08$	$9.54e-06 \pm 3.9e-07$
n_1	-	$[5.0e-01, 1.0e+00]$	$8.82e-01 \pm 2.6e-03$	$8.65e-01 \pm 4.5e-02$	$8.36e-01 \pm 3.2e-03$	$8.45e-01 \pm 7.7e-04$	$8.21e-01 \pm 5.1e-03$
χ^2	-	-	$5.033e-04$	$2.761e-04$	$1.292e-04$	$1.441e-04$	$4.433e-04$

Analysis Results: 8H

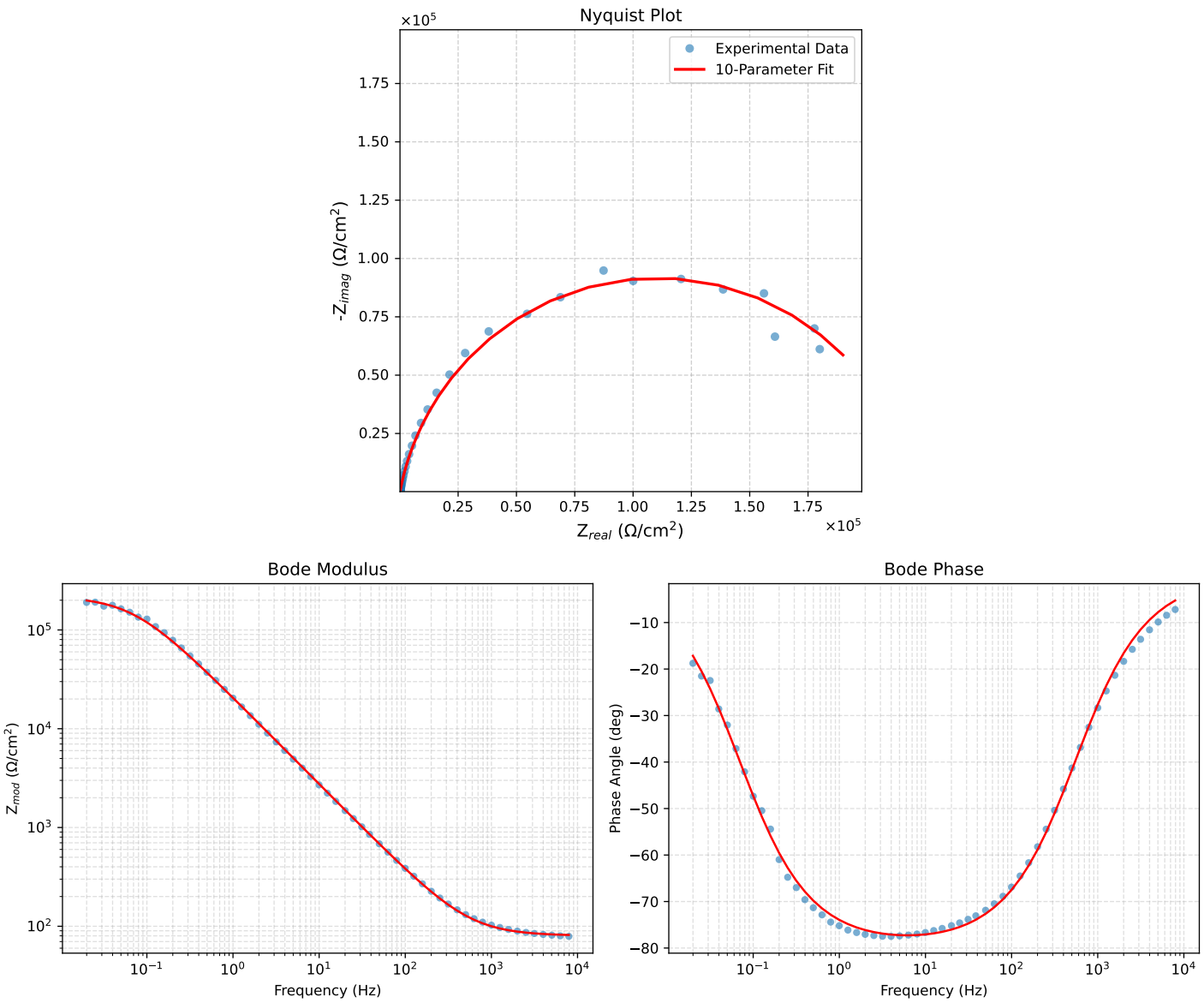

Figure 1: EIS Fit Results for Cauvel_1_Lcystine_8H

Analysis Results: 24H

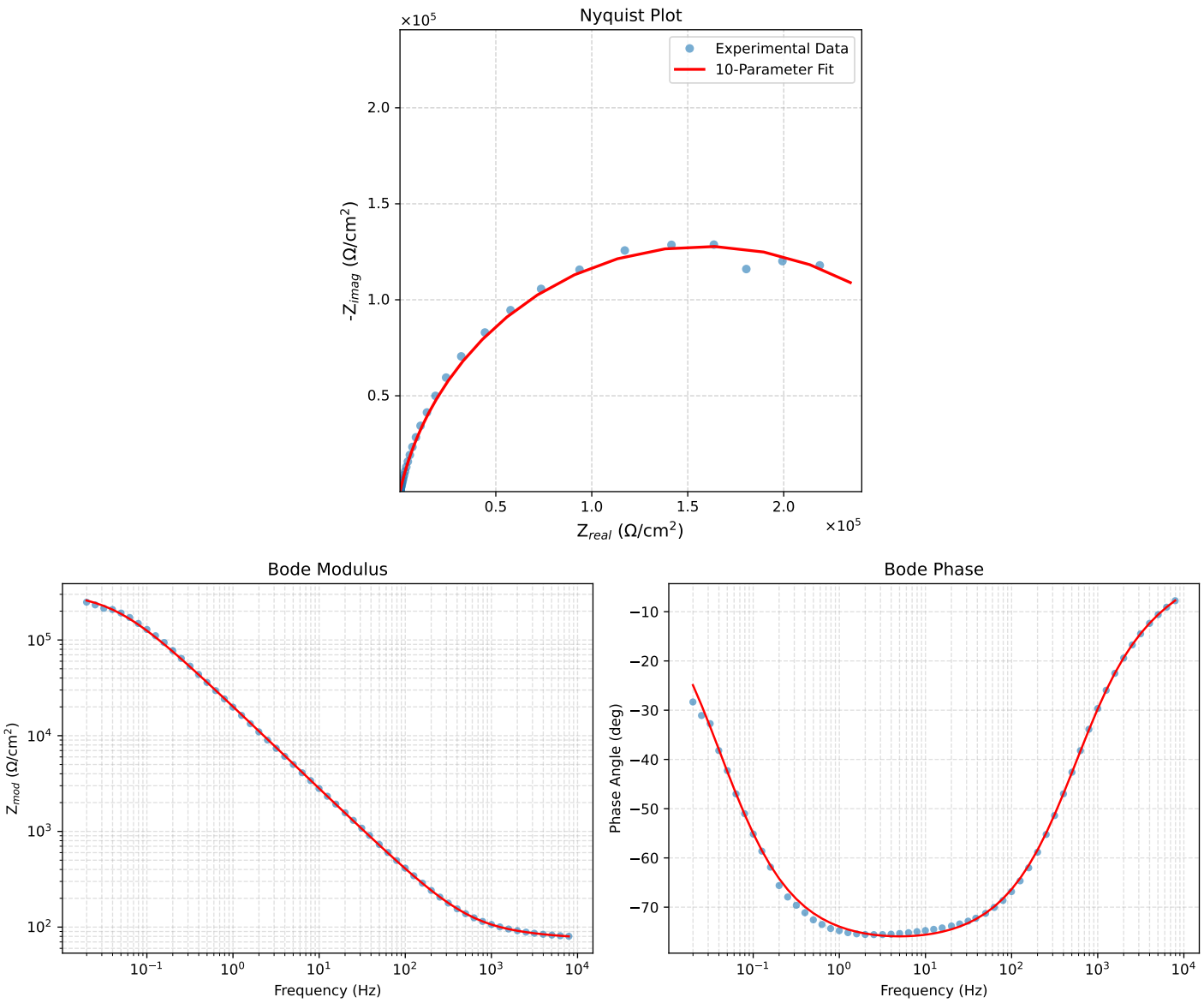

Figure 2: EIS Fit Results for Cauvel_1_Lcystine_24H

Analysis Results: 48H

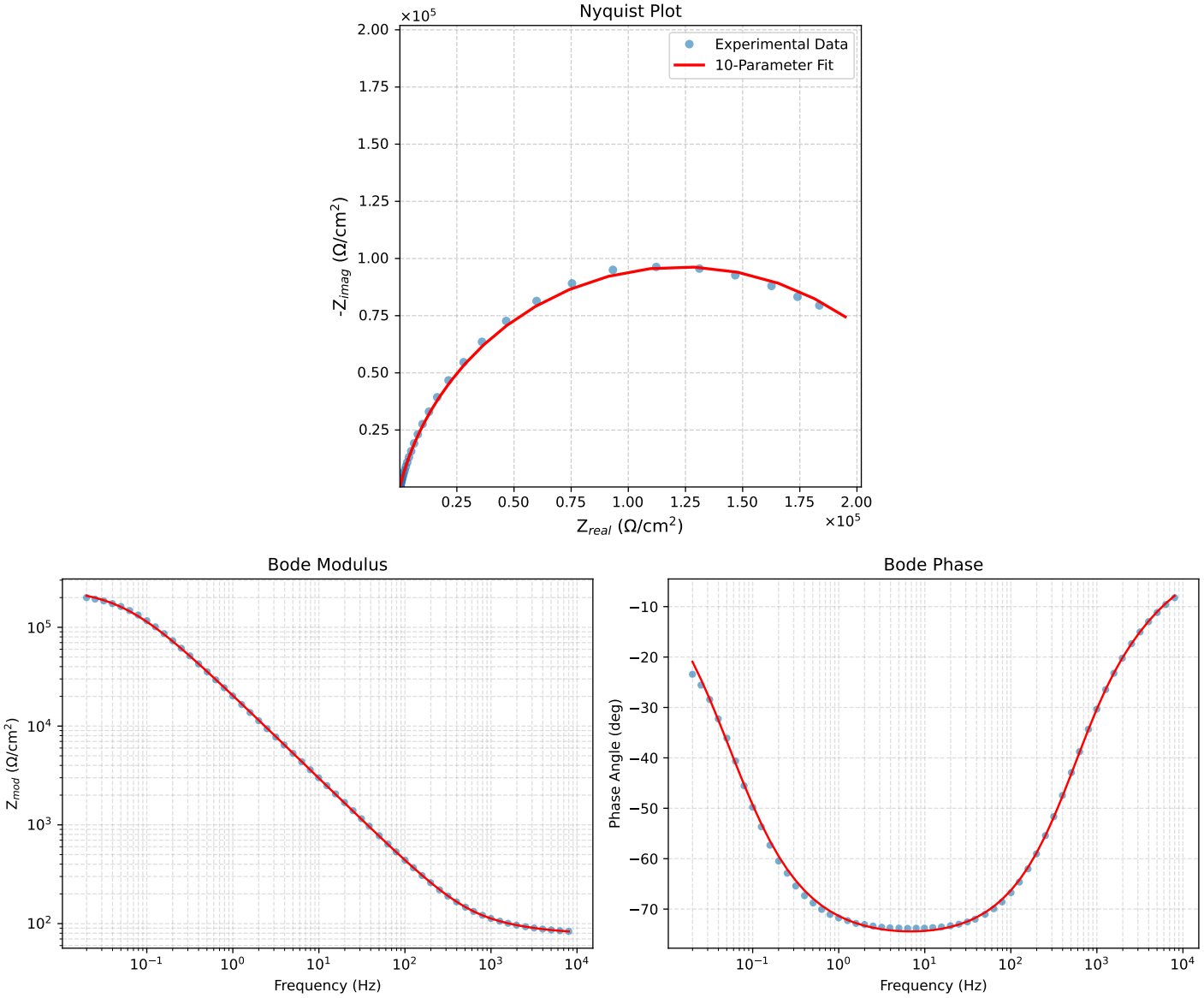

Figure 3: EIS Fit Results for Cauvel_1_Lcystine_48H

Analysis Results: 72H

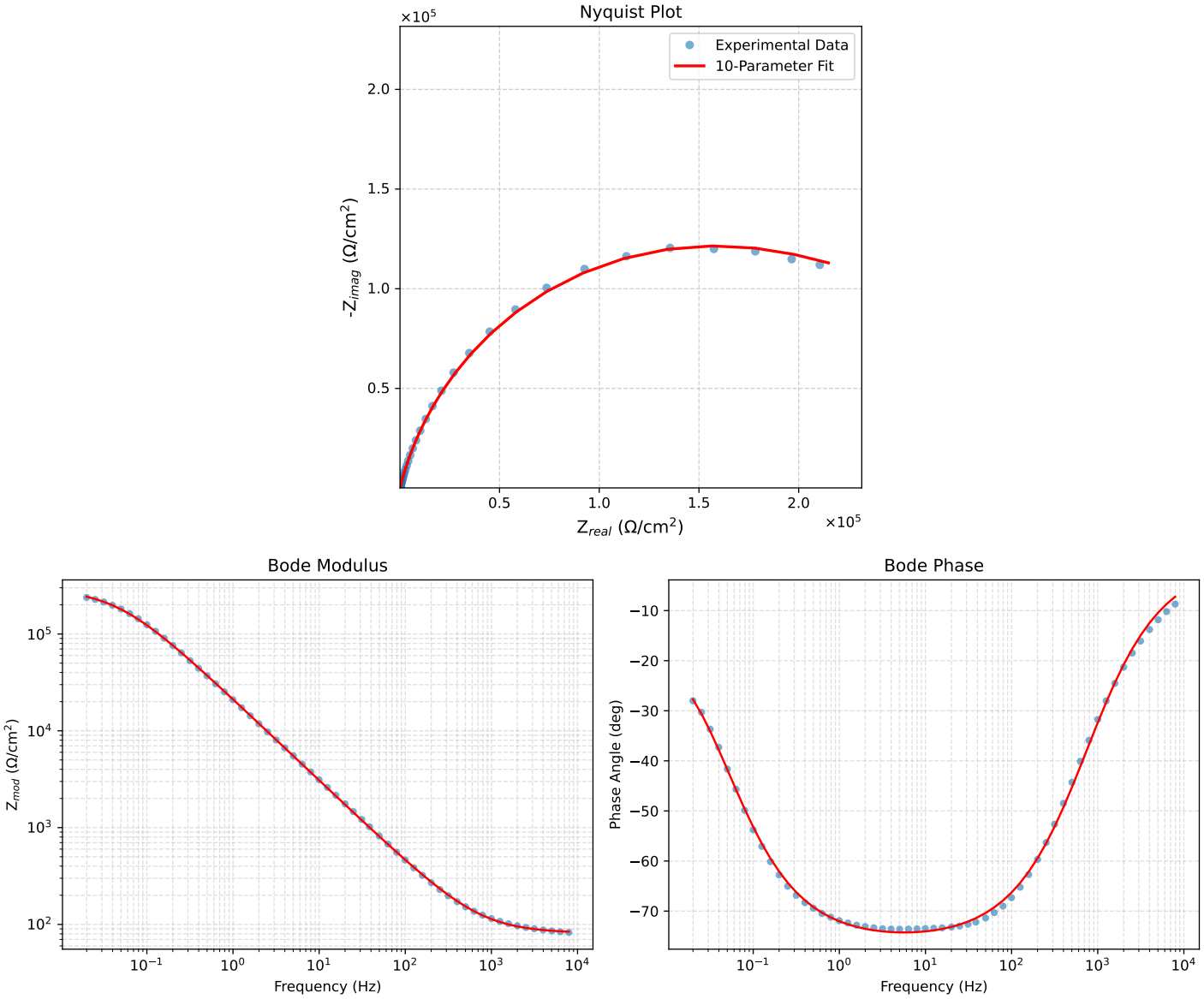

Figure 4: EIS Fit Results for Cauvel_1_Lcystine_72H

Analysis Results: 168H

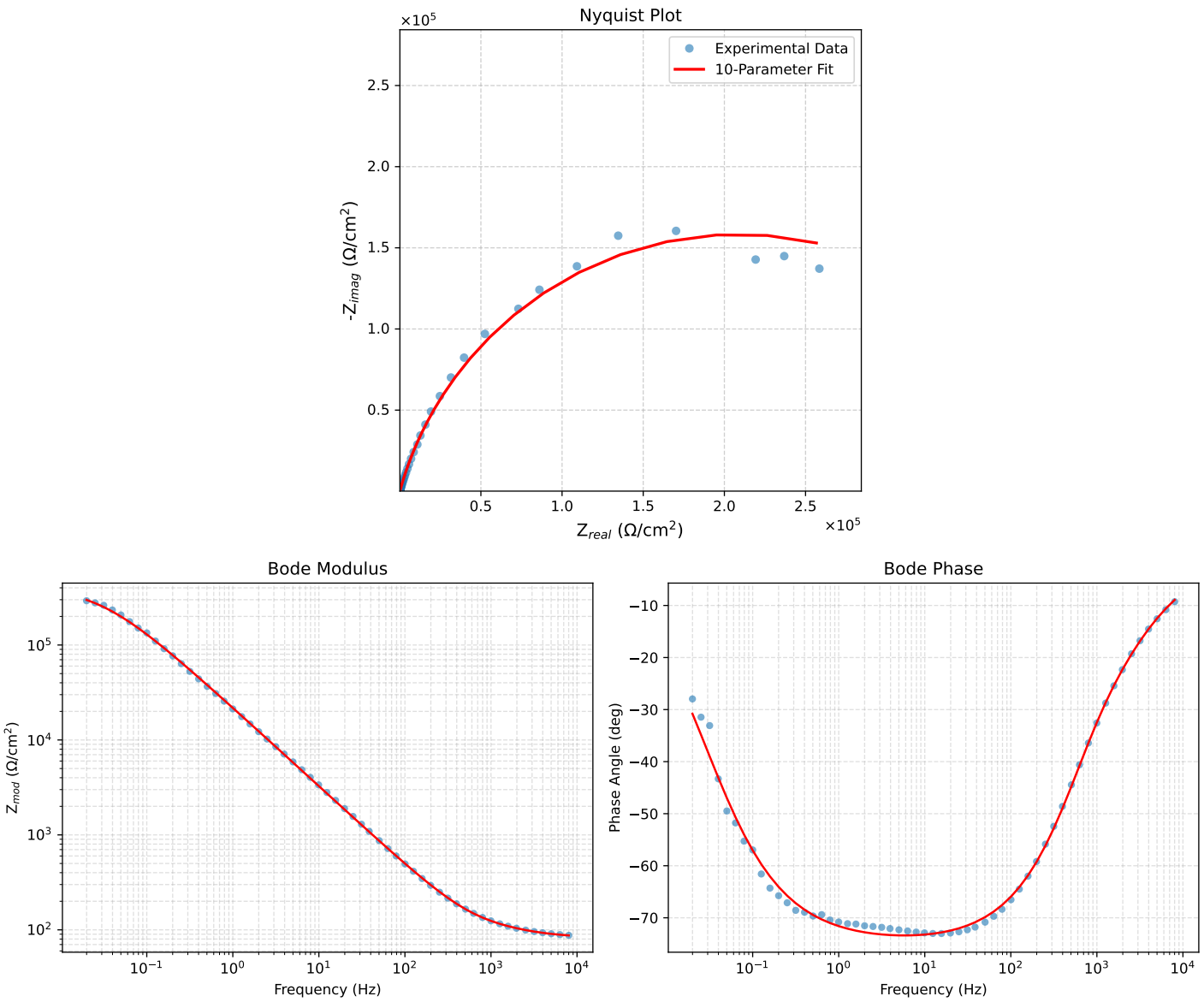

Figure 5: EIS Fit Results for Cauvel_1_Lcystine_168H