Comparative EIS Kinetics Report

Model Structure: `R0-p(R1-p(R2,CPE2),CPE1)`
Used data: altered data, first 2 points removed and points with $freq > 2e+04$ removed

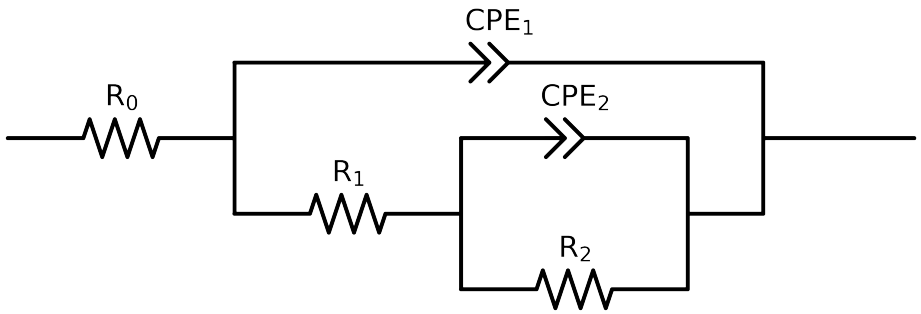

Element	Unit	Bounds	Cauvel_1_MBT_24H	Cauvel_1_MBT_48H	Cauvel_1_MBT_72H	Cauvel_1_MBT_168H
R_0	Ω	$[1.0e-03, 1.0e+03]$	$7.26e+01 \pm 3.8e-01$	$6.79e+01 \pm 3.5e-01$	$6.48e+01 \pm 3.8e-01$	$7.16e+01 \pm 4.6e-01$
R_1	Ω	$[1.0e+00, 1.0e+08]$	$4.66e+05 \pm 7.4e+04$	$5.38e+05 \pm 7.1e+04$	$5.28e+05 \pm 5.9e+04$	$6.43e+04 \pm 1.6e+04$
R_2	Ω	$[1.0e+00, 1.0e+08]$	$1.00e+06 \pm 1.1e+04$	$1.25e+06 \pm 4.0e+03$	$1.00e+08 \pm 2.5e-01$	$1.39e+06 \pm 9.3e+04$
Q_2	Ω^{-1} sec^a	$[1.0e-11, 1.0e-03]$	$5.16e-06 \pm 1.9e-06$	$7.20e-06 \pm 3.0e-06$	$1.08e-05 \pm 4.1e-06$	$2.63e-06 \pm 1.4e-07$
n_2	-	$[5.0e-01, 1.0e+00]$	$5.00e-01 \pm 5.2e-02$	$5.00e-01 \pm 8.0e-02$	$5.00e-01 \pm 1.0e-01$	$7.08e-01 \pm 2.6e-02$
Q_1	Ω^{-1} sec^a	$[1.0e-11, 1.0e-03]$	$7.40e-06 \pm 6.2e-08$	$7.85e-06 \pm 5.8e-08$	$8.36e-06 \pm 6.3e-08$	$8.05e-06 \pm 1.7e-07$
n_1	-	$[5.0e-01, 1.0e+00]$	$8.96e-01 \pm 1.5e-03$	$8.83e-01 \pm 1.4e-03$	$8.72e-01 \pm 1.4e-03$	$8.72e-01 \pm 3.1e-03$
χ^2	-	-	$3.523e-04$	$3.230e-04$	$3.995e-04$	$3.906e-04$

Analysis Results: 24H

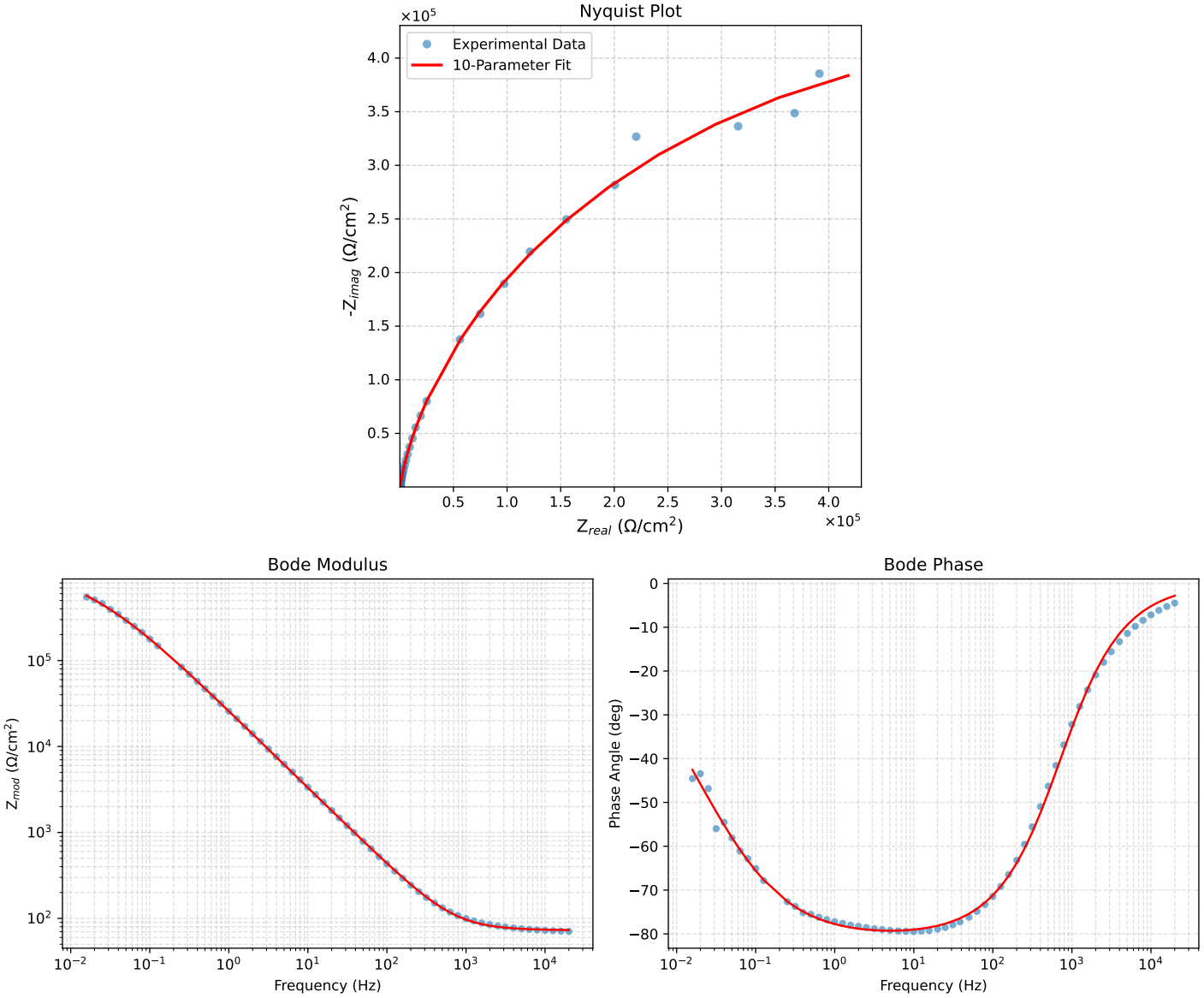

Figure 1: EIS Fit Results for Cauvel_1_MBT_24H

Analysis Results: 48H

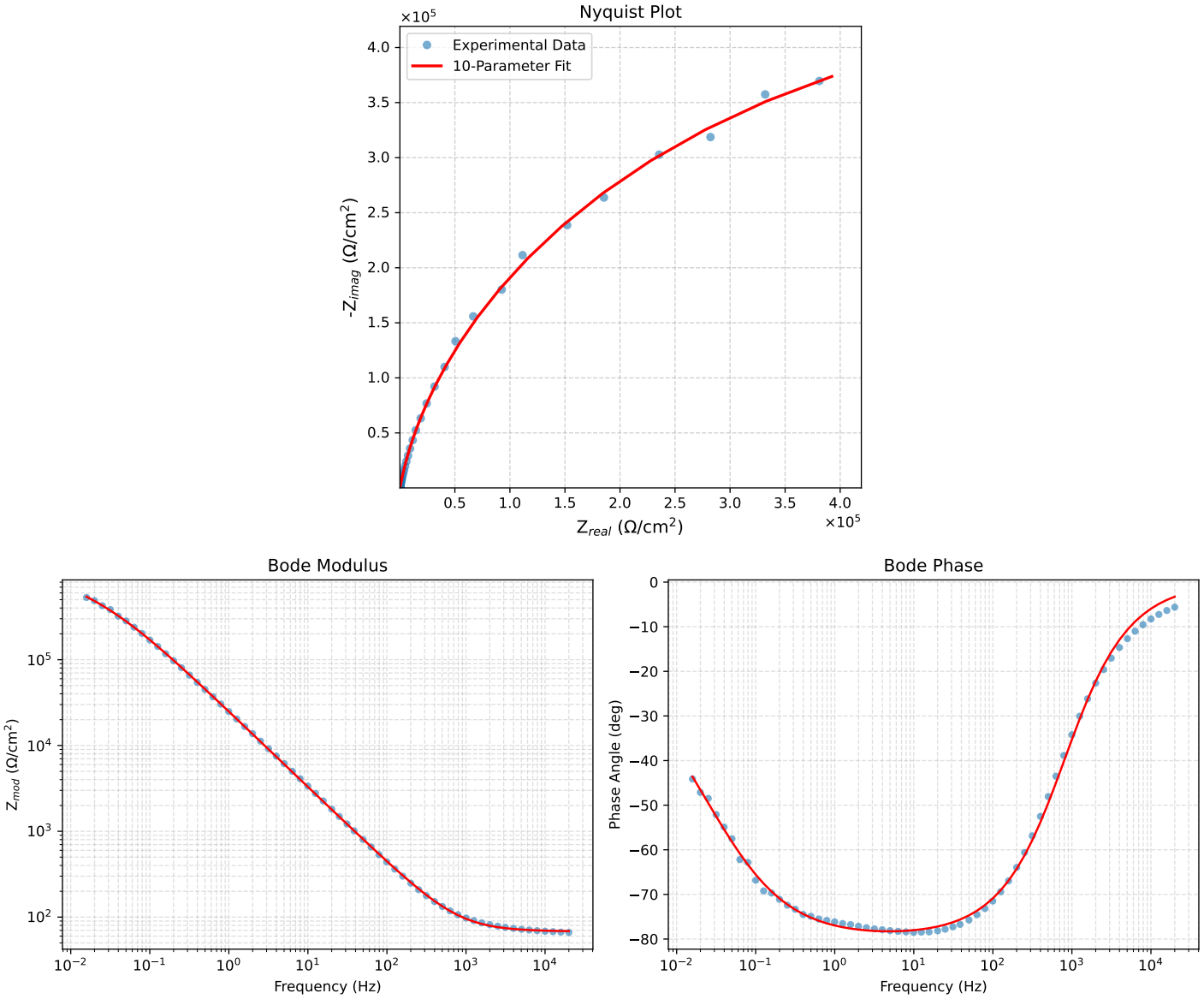

Figure 2: EIS Fit Results for Cauvel_1_MBT_48H

Analysis Results: 72H

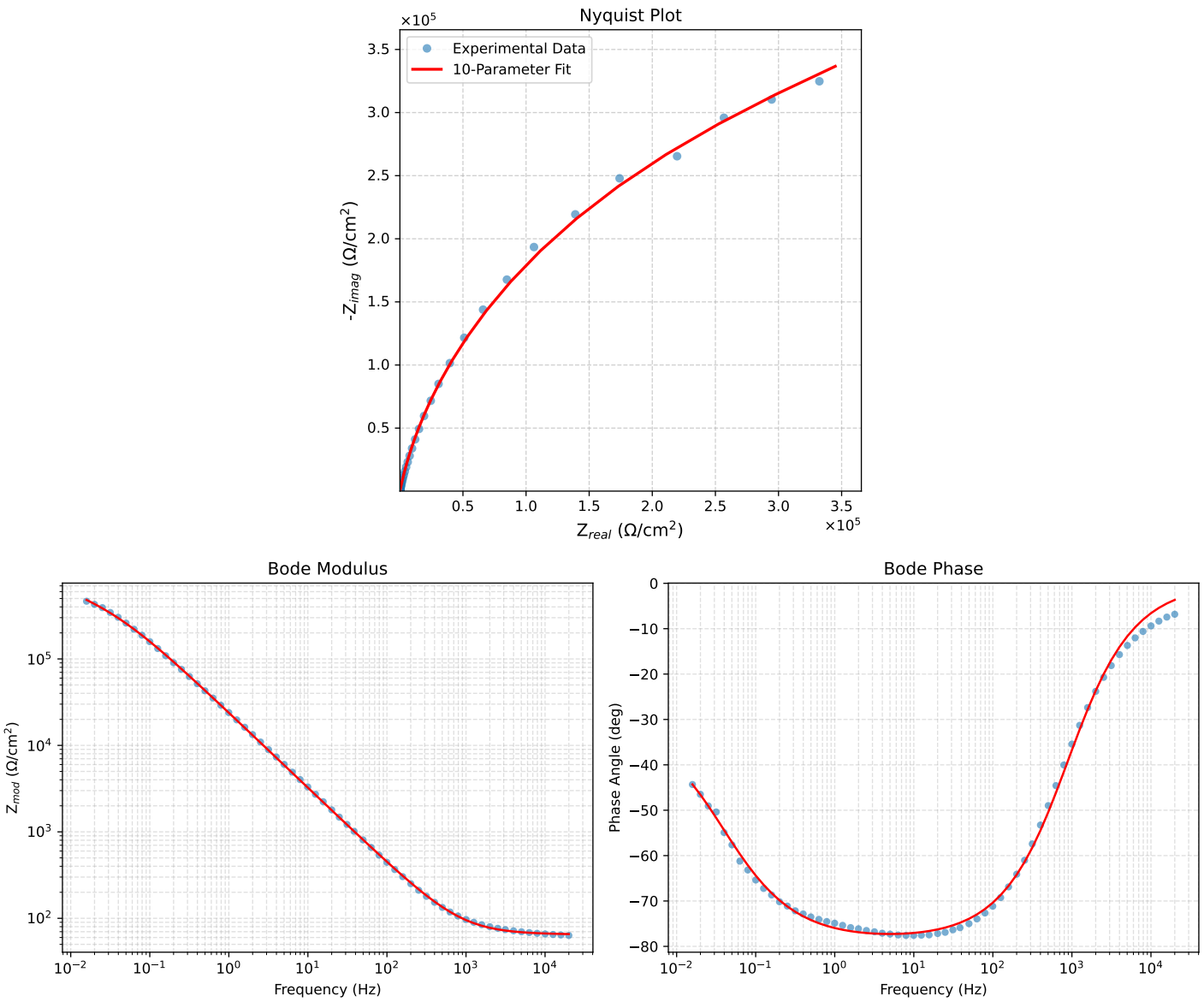

Figure 3: EIS Fit Results for Cauvel_1_MBT_72H

Analysis Results: 168H

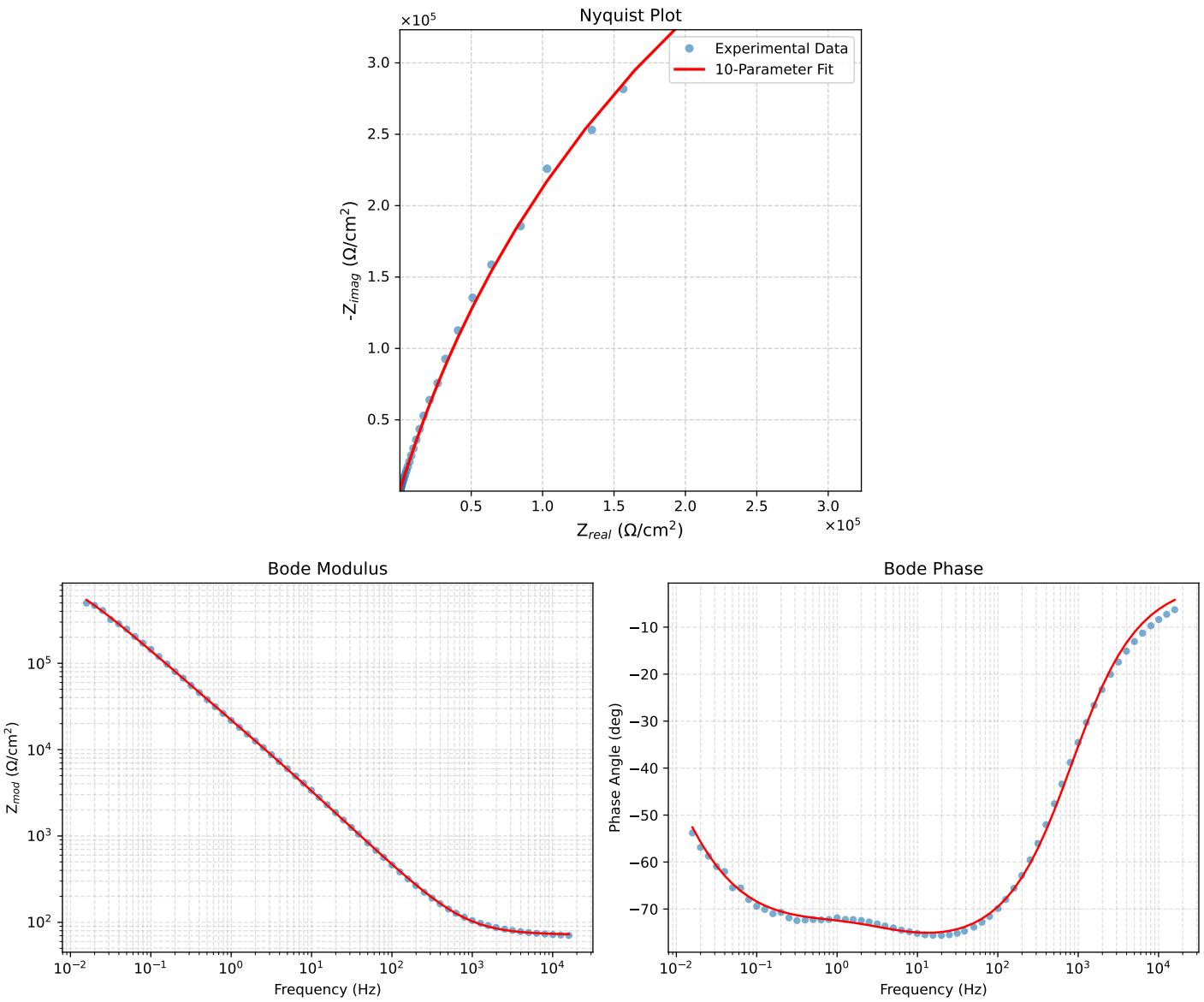

Figure 4: EIS Fit Results for Cauvel_1_MBT_168H