Comparative EIS Kinetics Report

Model Structure: `R0-p(R1,CPE1)`
Used data: altered data, first 6 points removed and points with $freq > 2e+04$ removed

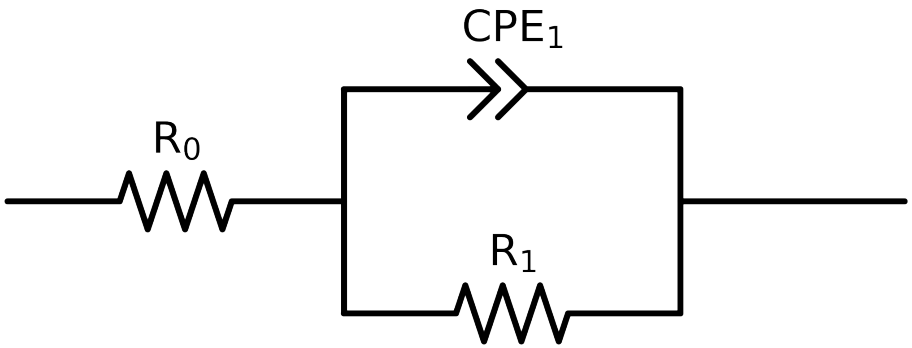

Element	Unit	Bounds	Cauvel_1_MBT_1H	Cauvel_1_MBT_4H	Cauvel_1_MBT_8H
R_0	Ω	$[1.0e-03, 1.0e+03]$	$8.12e+01 \pm 5.5e-01$	$7.68e+01 \pm 5.0e-01$	$7.54e+01 \pm 4.0e-01$
R_1	Ω	$[1.0e+00, 1.0e+08]$	$3.55e+05 \pm 9.8e+03$	$5.39e+05 \pm 1.0e+04$	$6.69e+05 \pm 1.3e+04$
Q_1	Ω^{-1} sec^a	$[1.0e-11, 1.0e-03]$	$6.07e-06 \pm 4.6e-08$	$6.81e-06 \pm 4.2e-08$	$7.01e-06 \pm 3.4e-08$
n_1	-	$[5.0e-01, 1.0e+00]$	$9.28e-01 \pm 1.6e-03$	$9.12e-01 \pm 1.3e-03$	$9.06e-01 \pm 1.0e-03$
χ^2	-	-	$6.673e-04$	$5.966e-04$	$3.844e-04$

Analysis Results: 1H

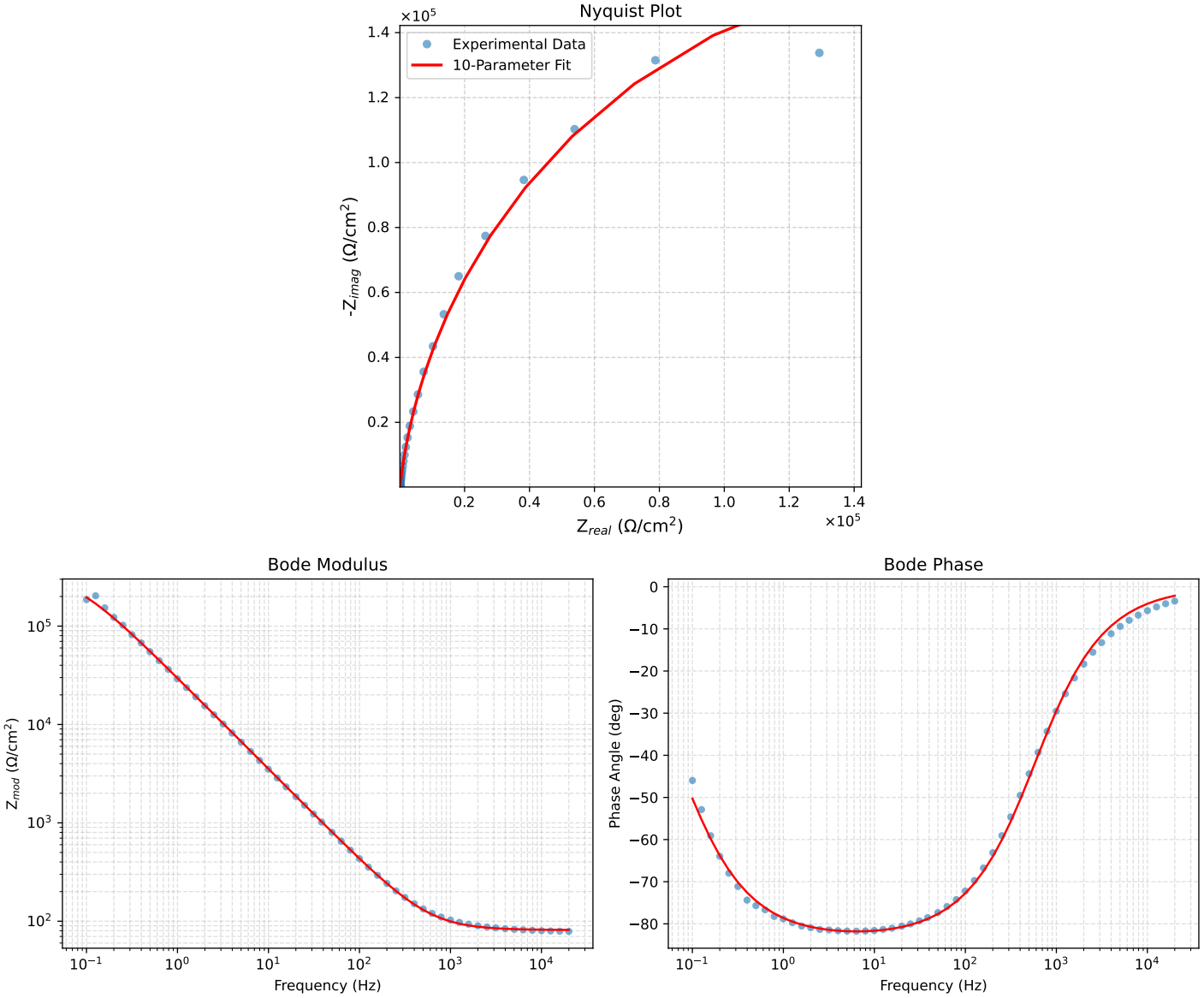

Figure 1: EIS Fit Results for Cauvel_1_MBT_1H

Analysis Results: 4H

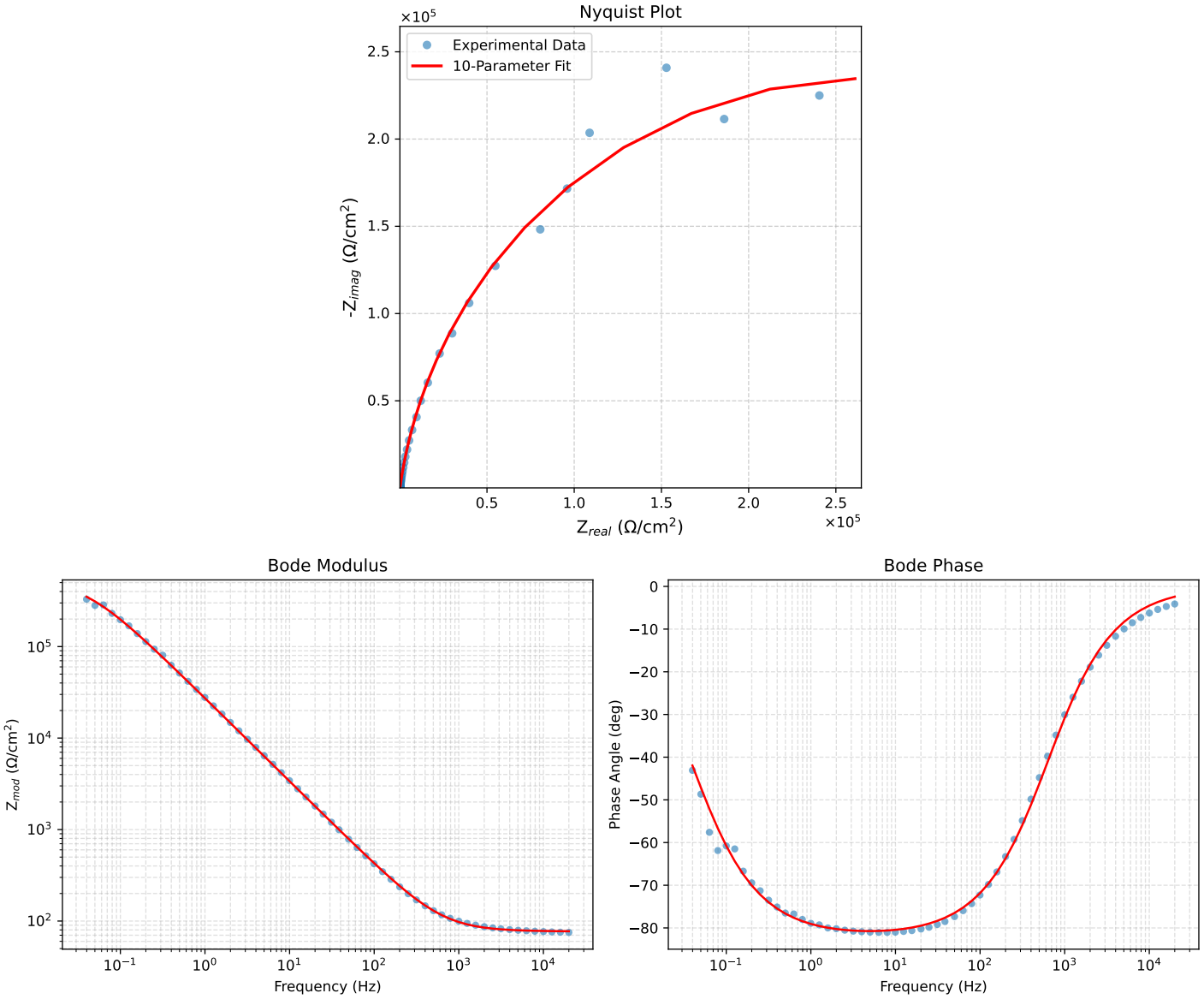

Figure 2: EIS Fit Results for Cauvel_1_MBT_4H

Analysis Results: 8H

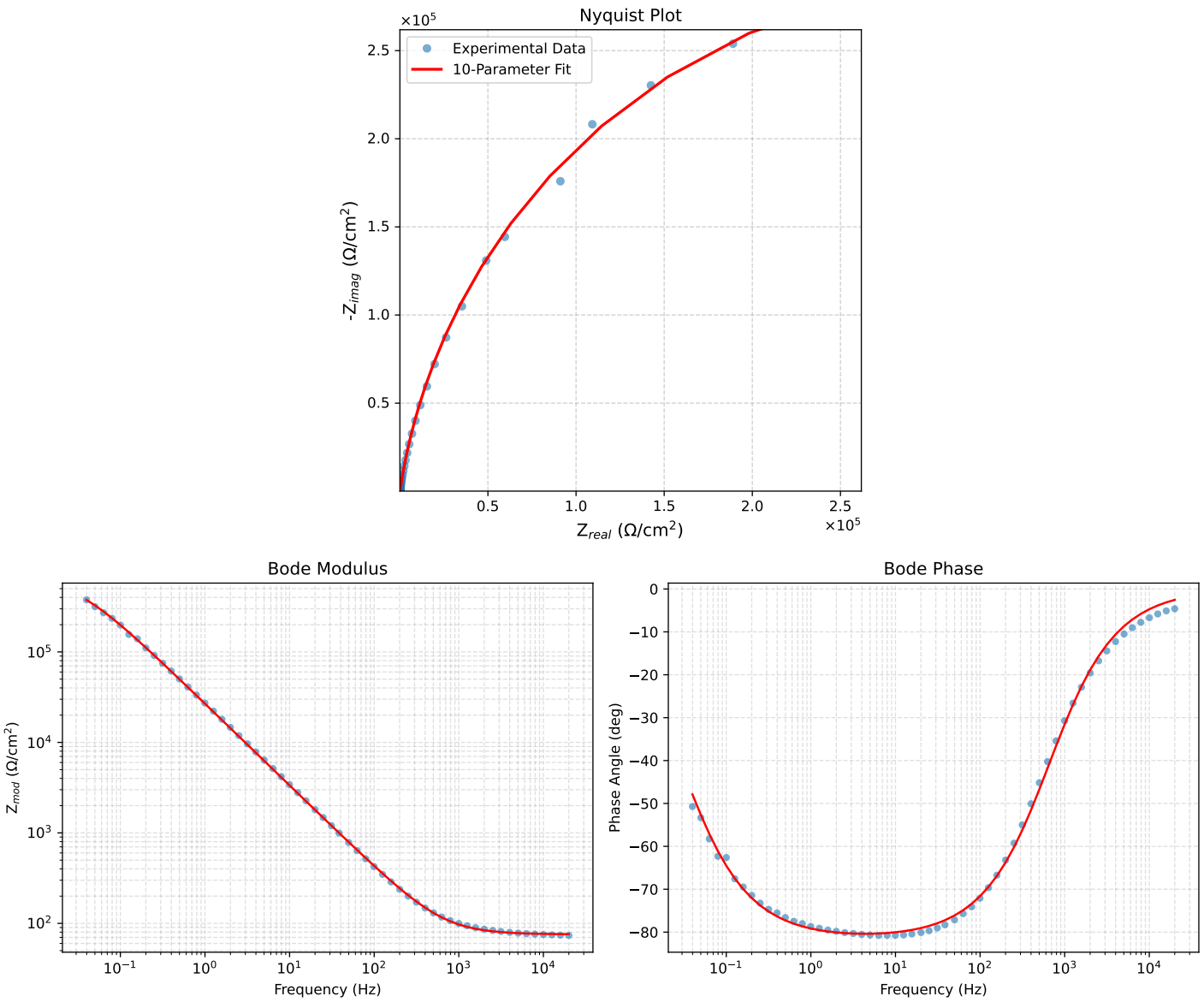

Figure 3: EIS Fit Results for Cauvel_1_MBT_8H