Comparative EIS Kinetics Report

Model Structure: `R0-p(R1-p(R2,CPE2),CPE1)`
Used data: original data

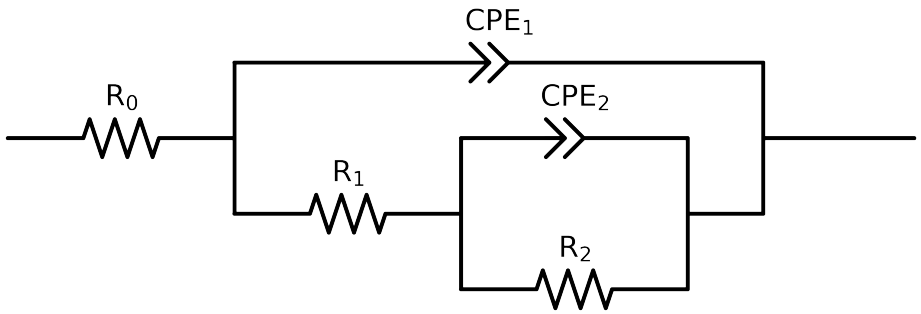

Element	Unit	Bounds	Cauvel_1_MBT_24H	Cauvel_1_MBT_48H	Cauvel_1_MBT_72H	Cauvel_1_MBT_168H
R_0	Ω	$[1.0e-03, 1.0e+03]$	$7.12e+01 \pm 3.3e-01$	$6.69e+01 \pm 4.2e-01$	$6.31e+01 \pm 4.1e-01$	$1.03e+01 \pm 2.3e+01$
R_1	Ω	$[1.0e+00, 1.0e+08]$	$5.79e+05 \pm 5.8e+04$	$4.03e+02 \pm 5.7e+04$	$5.79e+05 \pm 5.3e+04$	$6.24e+01 \pm 2.3e+01$
R_2	Ω	$[1.0e+00, 1.0e+08]$	$3.26e+06 \pm 4.4e+02$	$1.22e+06 \pm 5.4e+04$	$1.00e+08 \pm 1.2e-01$	$2.86e+06 \pm 5.6e+05$
Q_2	Ω^{-1} sec^a	$[1.0e-11, 1.0e-03]$	$9.37e-06 \pm 3.1e-06$	$1.58e-06 \pm 2.3e-07$	$1.46e-05 \pm 5.1e-06$	$7.96e-06 \pm 3.5e-07$
n_2	-	$[5.0e-01, 1.0e+00]$	$5.00e-01 \pm 7.5e-02$	$5.00e-01 \pm 8.1e-02$	$5.86e-01 \pm 9.8e-02$	$8.70e-01 \pm 4.9e-03$
Q_1	Ω^{-1} sec^a	$[1.0e-11, 1.0e-03]$	$7.50e-06 \pm 5.7e-08$	$7.11e-06 \pm 4.3e-07$	$8.43e-06 \pm 7.7e-08$	$2.46e-06 \pm 3.2e-07$
n_1	-	$[5.0e-01, 1.0e+00]$	$8.93e-01 \pm 1.4e-03$	$8.96e-01 \pm 4.2e-03$	$8.70e-01 \pm 1.8e-03$	$5.00e-01 \pm 5.1e-02$
χ^2	-	-	$4.301e-04$	$7.270e-04$	$7.742e-04$	$6.564e-04$

Analysis Results: 24H

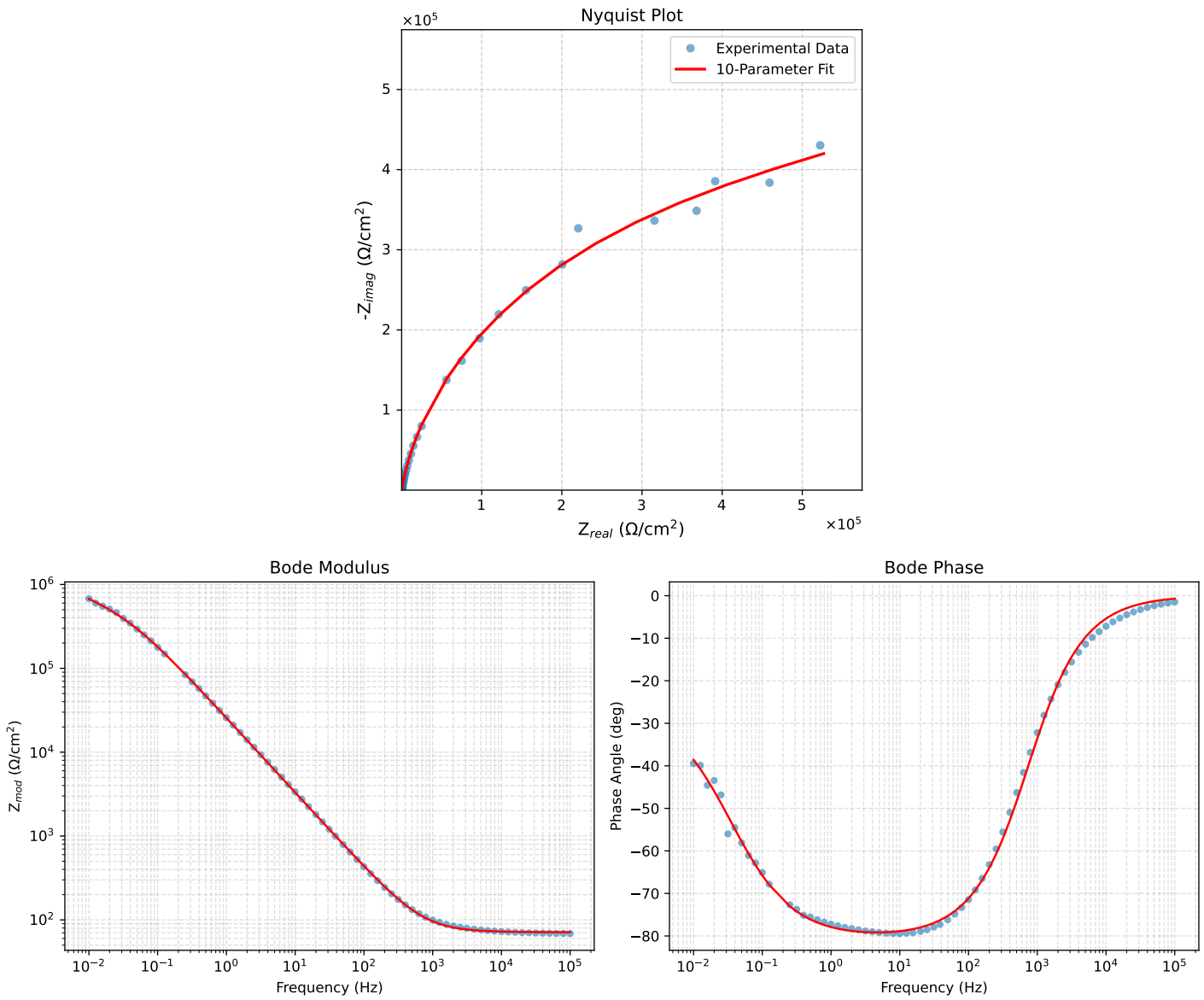

Figure 1: EIS Fit Results for Cauvel_1_MBT_24H

Analysis Results: 48H

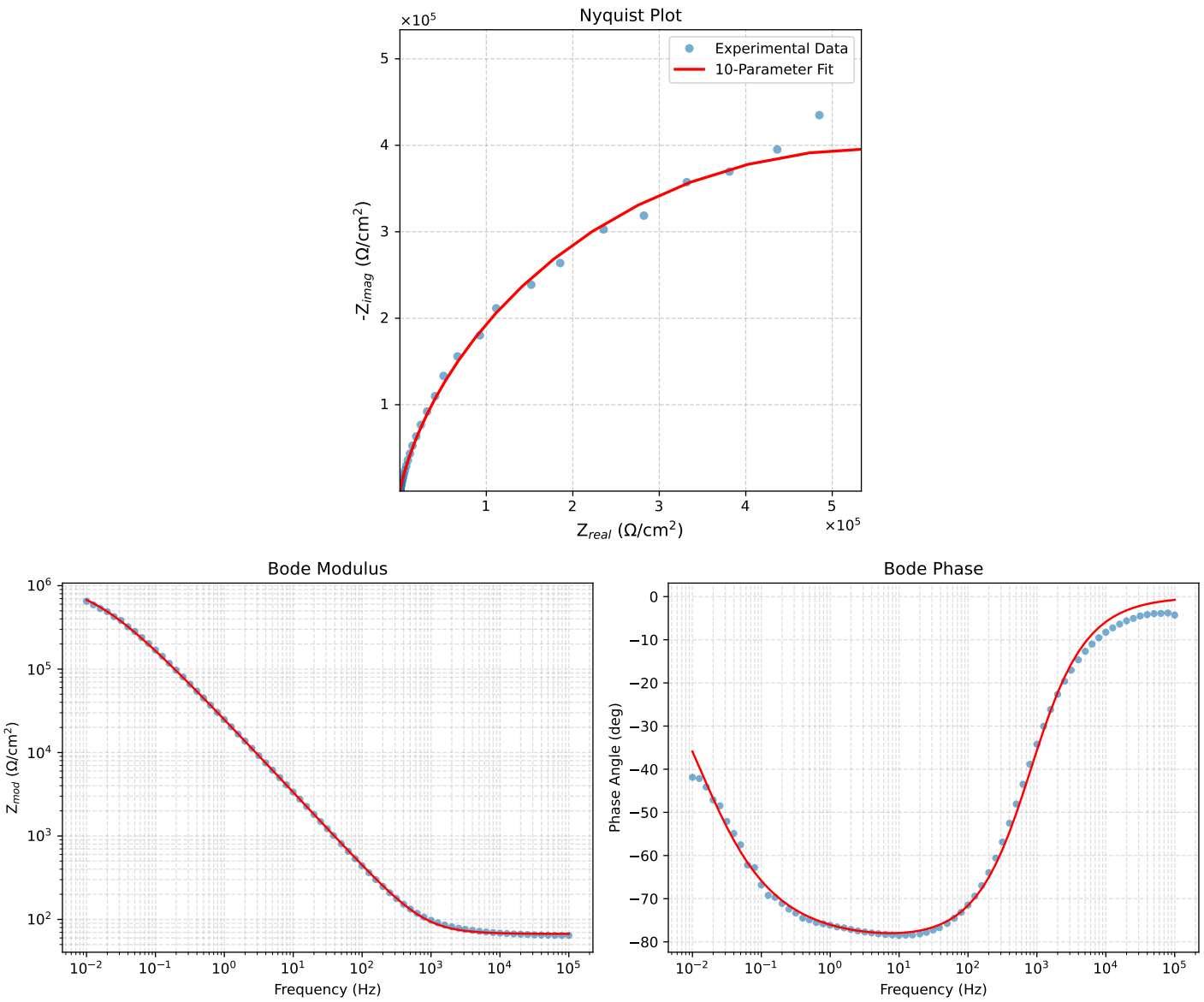

Figure 2: EIS Fit Results for Cauvel_1_MBT_48H

Analysis Results: 72H

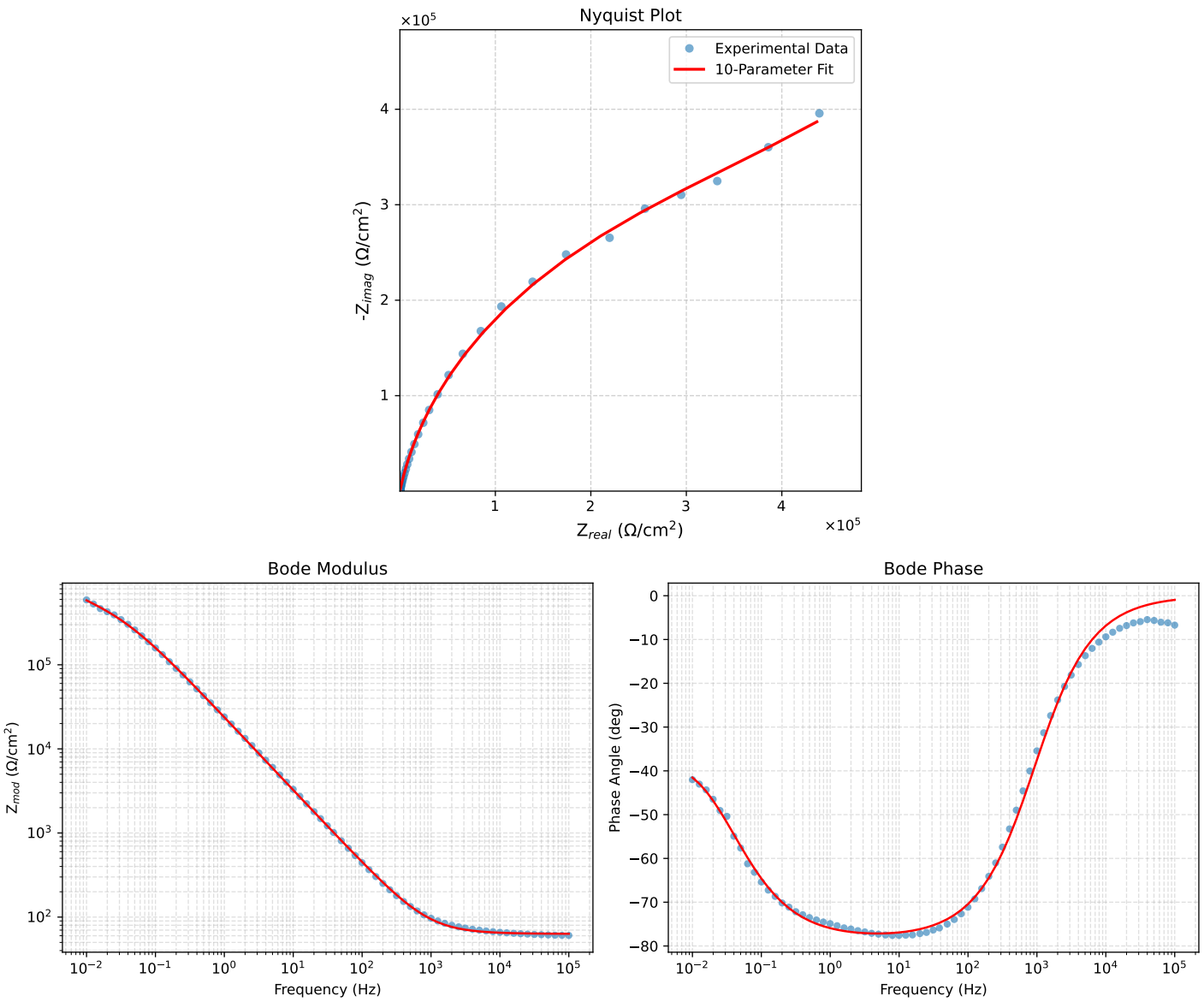

Figure 3: EIS Fit Results for Cauvel_1_MBT_72H

Analysis Results: 168H

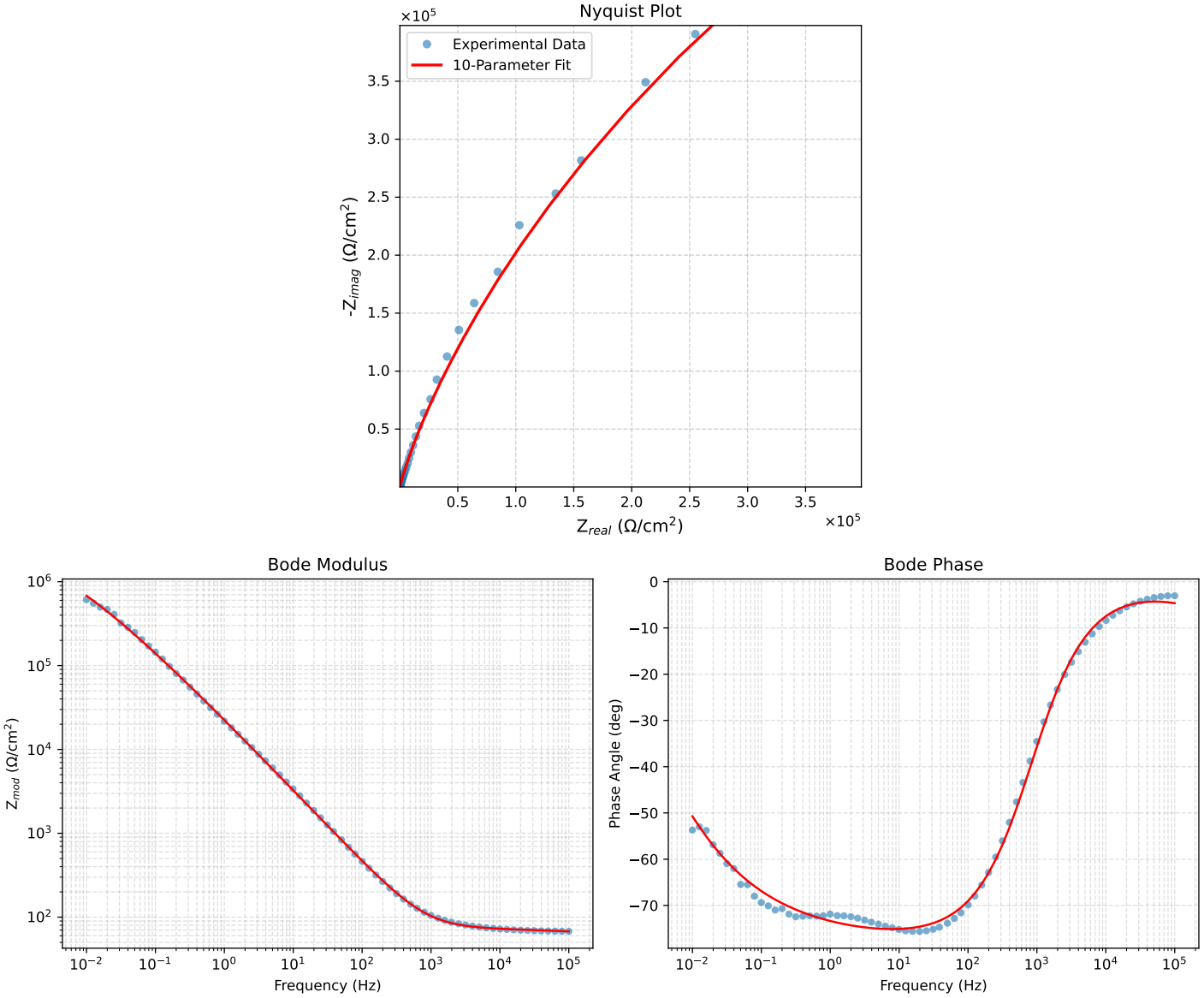

Figure 4: EIS Fit Results for Cauvel_1_MBT_168H