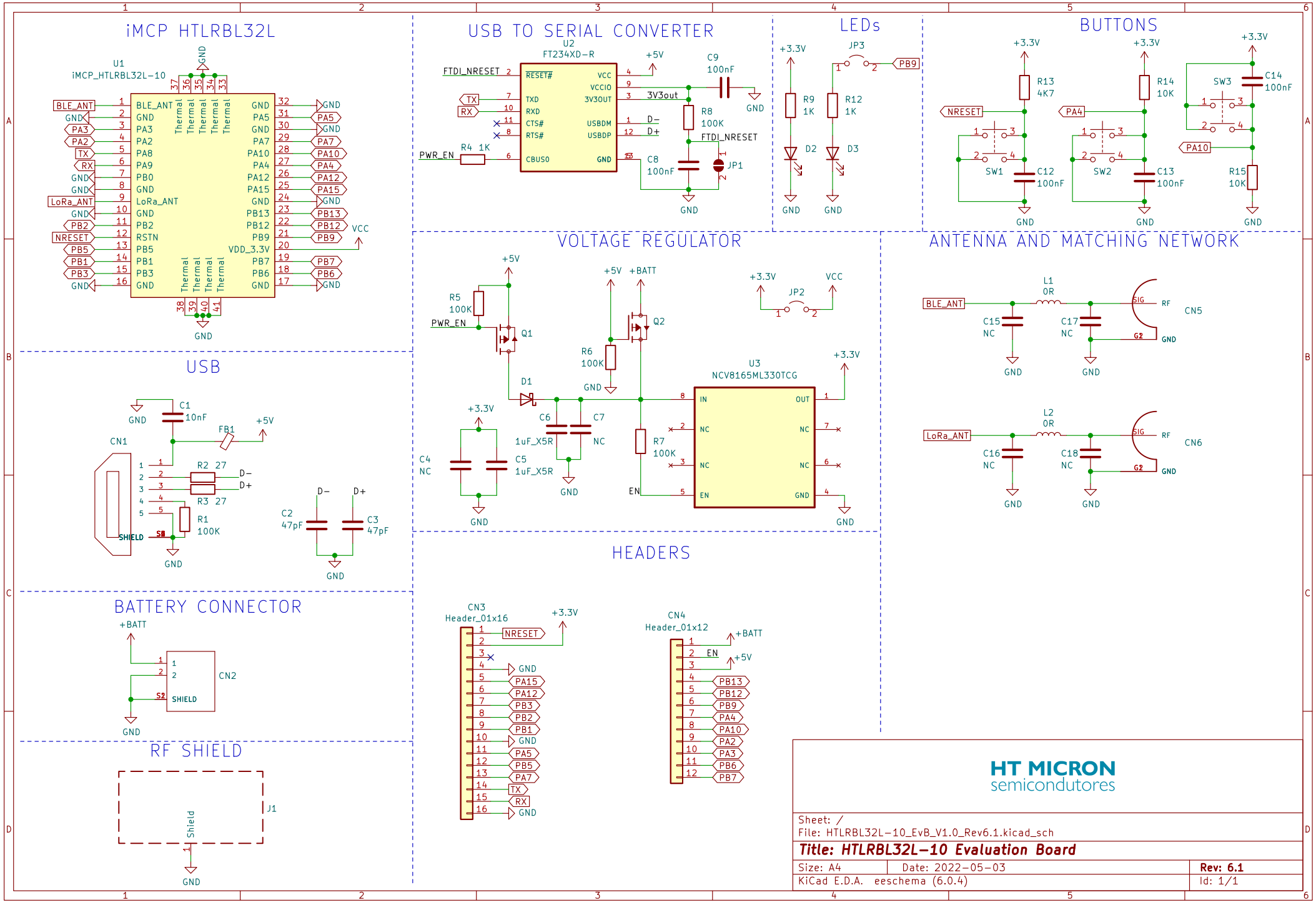
iMCP HTLRBL32L
U1
iMCP_HTLRBL32L-10
BLE_ANT
GND
PA3
PA2
TX
RX
GND
GND
LoRa_ANT
GND
PB2
NRESET
PB5
PB1
PB3
GND
BLE_ANT
GND
PA3
PA2
PA8
PA9
PB0
GND
LoRa_ANT
GND
PB2
RSTN
PB5
PB1
PB3
GND
Thermal
GND
PA5
GND
PA7
PA10
PA4
PA12
PA15
GND
PB13
PB12
PB9
VDD_3.3V
PB7
PB6
GND
VCC
USB TO SERIAL CONVERTER
U2
FT234XD-R
FTDI_NRESET
TX
RX
PWR_EN
R4 1K
RESET#
TXD
RXD
CTS#
RTS#
CBUS0
VCC
VCCIO
3V3OUT
USBDM
USBDP
GND
+5V
3V3out
D-
D+
C9
100nF
R8
100K
FTDI_NRESET
C8
100nF
JP1
LEDs
+3.3V
JP3
PB9
R9
1K
R12
1K
D2
D3
BUTTONS
+3.3V
R13
4K7
NRESET
SW1
C12
100nF
R14
10K
PA4
SW2
C13
100nF
SW3
C14
100nF
PA10
R15
10K
VOLTAGE REGULATOR
+5V
R5
100K
PWR_EN
Q1
D1
+5V
+BATT
Q2
R6
100K
GND
+3.3V
JP2
VCC
U3
NCV8165ML330TCG
IN
NC
NC
EN
OUT
NC
NC
GND
+3.3V
C4
NC
C5
1uF_X5R
C6
1uF_X5R
C7
NC
R7
100K
EN
ANTENNA AND MATCHING NETWORK
BLE_ANT
L1
0R
C15
NC
C17
NC
SIG
RF
CN5
GND
LoRa_ANT
L2
0R
C16
NC
C18
NC
CN6
USB
C1
10nF
FB1
+5V
CN1
R2 27
R3 27
D-
D+
R1
100K
SHIELD
C2
47pF
C3
47pF
BATTERY CONNECTOR
+BATT
CN2
SHIELD
RF SHIELD
J1
Shield
HEADERS
CN3
Header_01x16
+3.3V
NRESET
GND
PA15
PA12
PB3
PB2
PB1
GND
PA5
PB5
PA7
TX
RX
GND
CN4
Header_01x12
+BATT
EN
+5V
PB13
PB12
PB9
PA4
PA10
PA2
PA3
PB6
PB7
HT MICRON
semicondutores
Sheet: /
File: HTLRBL32L-10_EvB_V1.0_Rev6.1.kicad_sch
Title: HTLRBL32L-10 Evaluation Board
Size: A4
Date: 2022-05-03
Rev: 6.1
KiCad E.D.A. eeschema (6.0.4)
Id: 1/1