Secure Execution

Lecture 10

Copyright © Politehnica Bucharest and Wyliodrin SRL 2025, licensed under CC BY-SA 4.0.

Secure Execution

- ARM TrustZone
  - Memory Attributes
  - Bus Attributes
- Trusted Firmware
- OTP

Security Extension

ARM TrustZone

Bibliography

for this section

Joseph Yiu, *The Definitive Guide to ARM® Cortex®-M23 and Cortex-M33 Processors*

- Chapter 7 - *TrustZone support in the memory system*
  - Section 7.1 - *Overview*
  - Section 7.2 - *SAU and IDAU*
  - Section 7.5 - *Memory protection controller and peripheral protection controller*

Raspberry Pi Ltd, *RP2350 Datasheet*

- Chapter 10 - *Security*
  - Section 10.2 - *Processor Security Features (Arm)*

Secure Execution Mode

two execution modes

- **Secure**
  - unprivileged (user)
  - privileged (supervisor)
- **NonSecure**
  - unprivileged (user)
  - privileged (supervisor)

memory attributes

- each bus transfer has an attribute label

secure gates

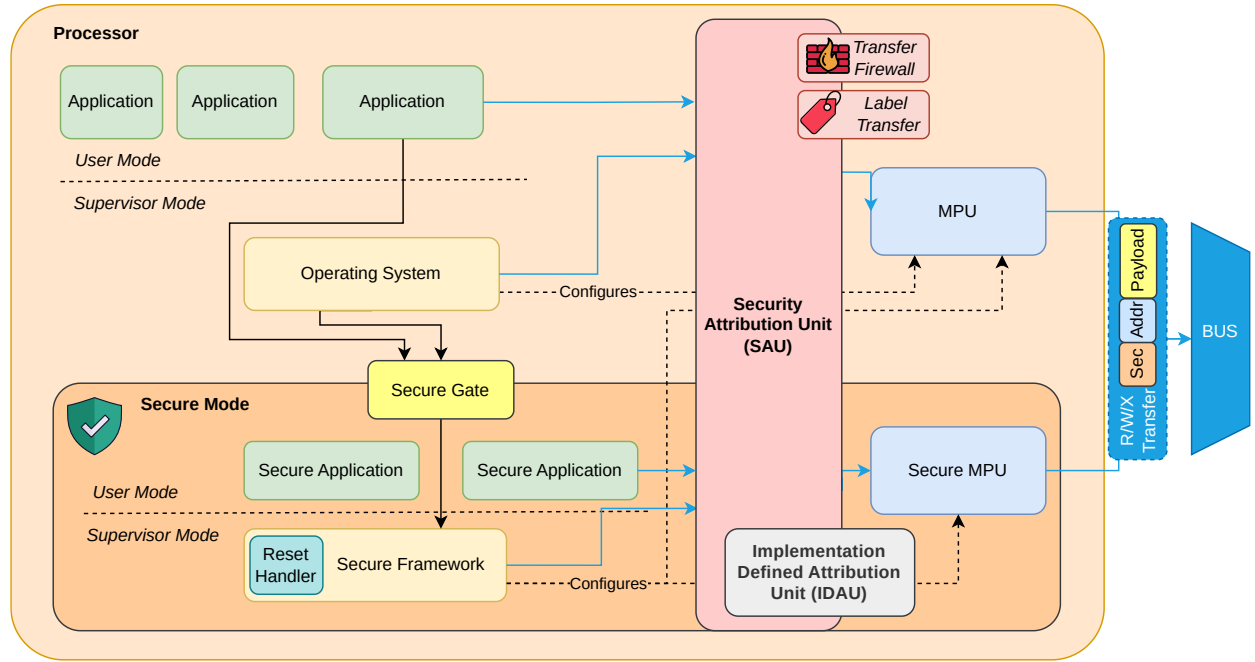

Memory Attributes

each memory region is labeled with one of the attributes

Type	Symbol	Description	*Transfer* Attribute
Secure	**S**	can be accessed only by code running in **secure mode**	secure
Non Secure Callable	**NSC**	code running in **non-secure mode** can make function calls into it with some restrictions	non-secure
NonSecure	**NS**	any code running in **any mode** can access it	non-secure
Exempt	**E**	any code running in **any mode** can access it (with no execution)	*executing code mode*

bus transfers are labeled base upon the execution mode and memory attribute

Implementation Defined Attribution Unit (IDAU)

hard wired by the microcontroller's manufacturer

RP2350's IDAU setup

Start Address	End Address	Region	Access
`0x00000000`	`0x000042ff`	Arm boot	Exempt
`0x00004300`	`0x00007dff`	USB/RISC-V boot	Non-secure (instruction fetch), Exempt (load/store)
`0x00007e00`	`0x00007fff`	BootROM SGs	Secure and Non-secure-Callable
`0x10000000`	`0x1fffffff`	XIP	Non-secure
`0x20000000`	`0x20081fff`	SRAM	Non-secure
`0x40000000`	`0x4fffffff`	APB	Exempt
`0x50000000`	`0x5fffffff`	AHB	Exempt
`0xd0000000`	`0xdfffffff`	SIO	Exempt

Security Attribution Unit (SAU)

software defined

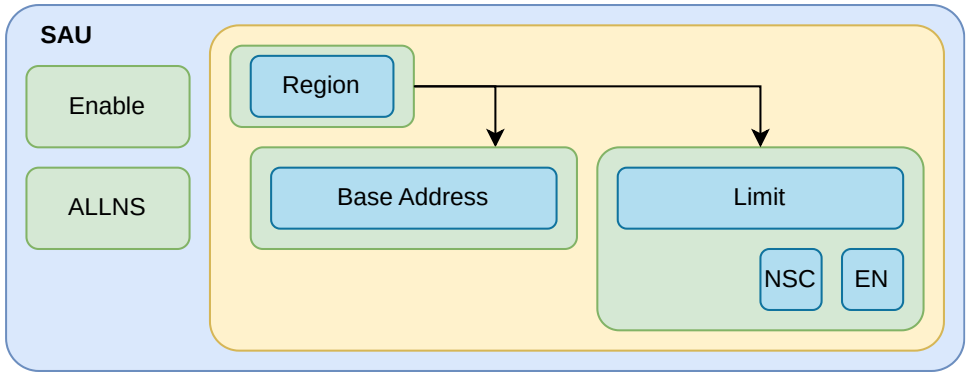

- allows the definition of maximum 8 *memory regions*
- regions cannot overlap
- regions have access permissions (similar to rwx)

$$region_size = 32 \times N$$

$$base_address = 32 \times N$$

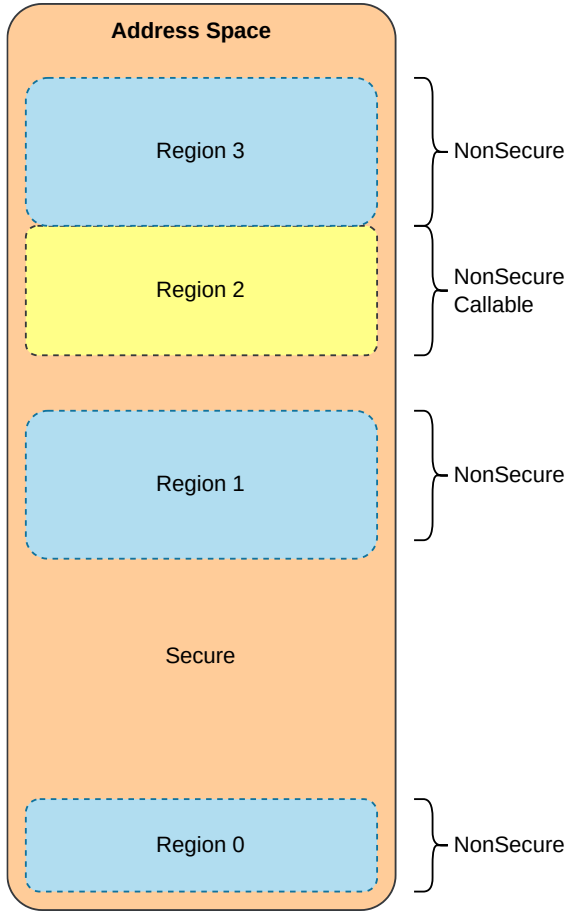

Address Attribute Resolution

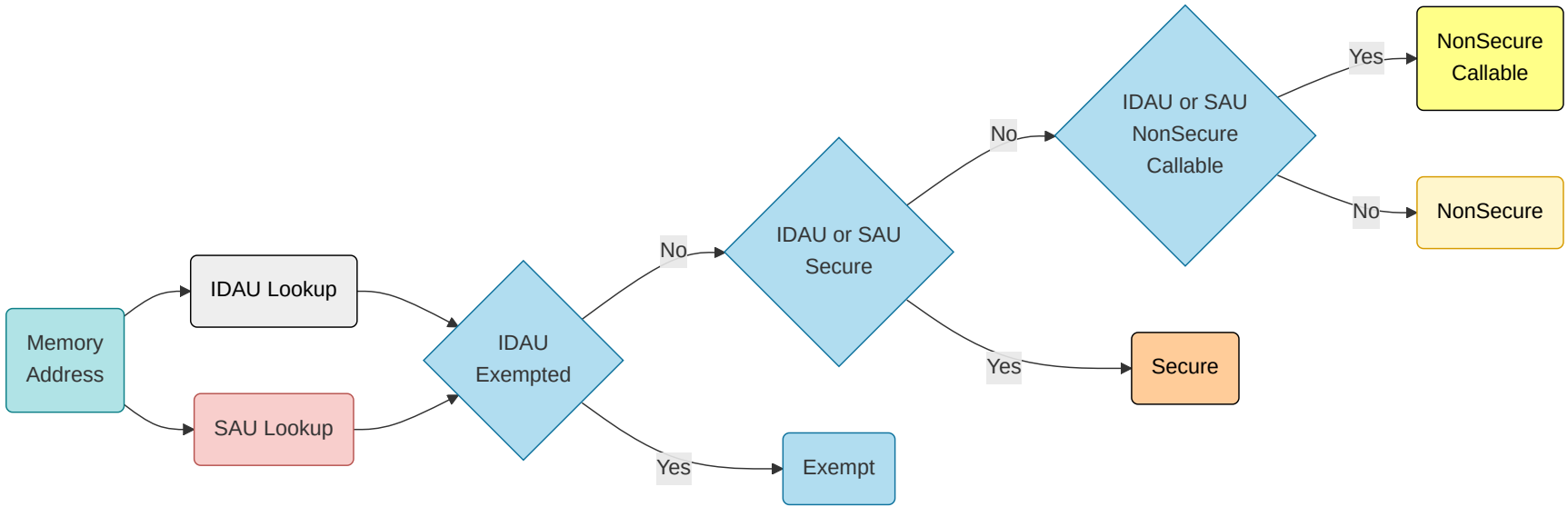

Attributes from IDAU and SAU are merged, using the most restrictive.

The Bus

secured

1. **Memory Controller** asks for data transfer or instruction fetch
2. **IDAU** and **SAU** determine the access attributes
3. **External Bus Routes** the request
   1. **MPC** for RAM or Flash
   2. Secure Aware Peripheral
   3. **PPC** for Non Secure Aware peripherals

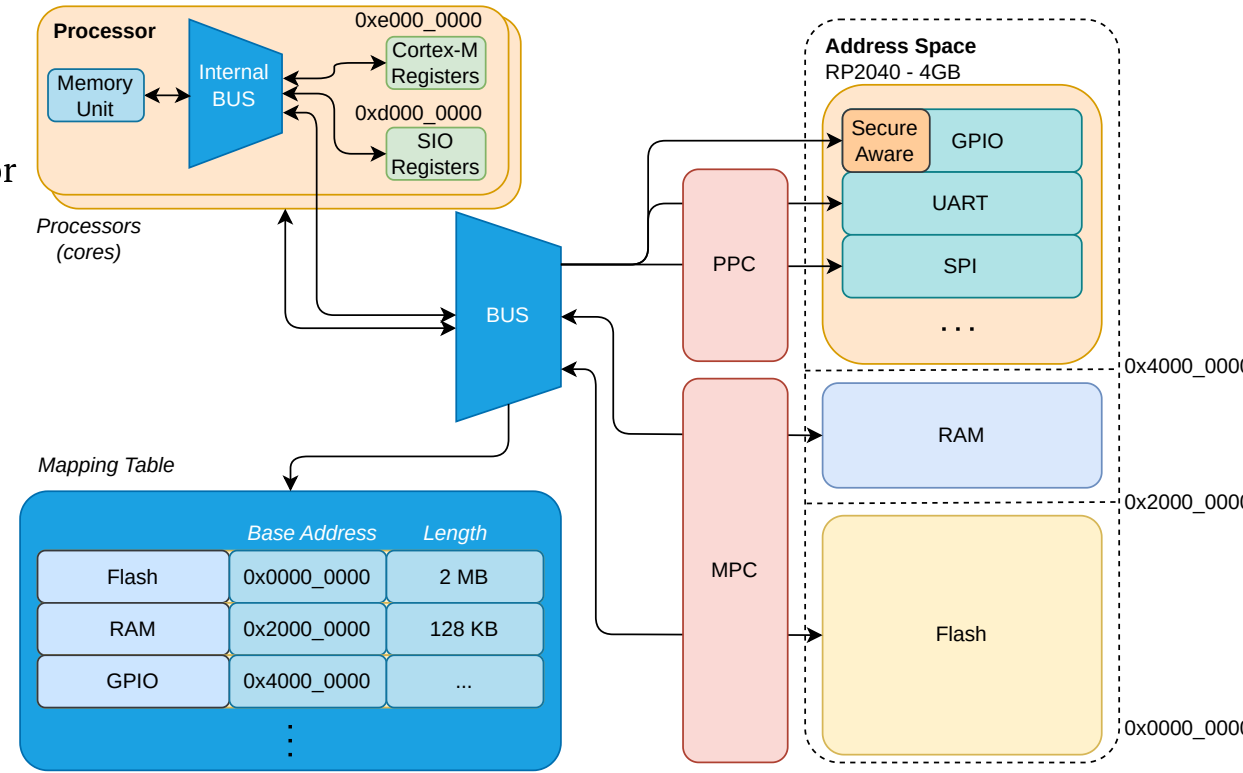

Memory Protection Controller (MPC)

optional - depends on vendor

RAM and Flash are aliased - they both appear at two different addresses

- one alias defined (in IDAU and SAU) as **NonSecure**
- one alias defined as **Secure**

RAM and Flash are split in pages

- usually 256 B or 512 B
- each page is defined as **NonSecure** or **Secure**

The two aliases have page holes in them.

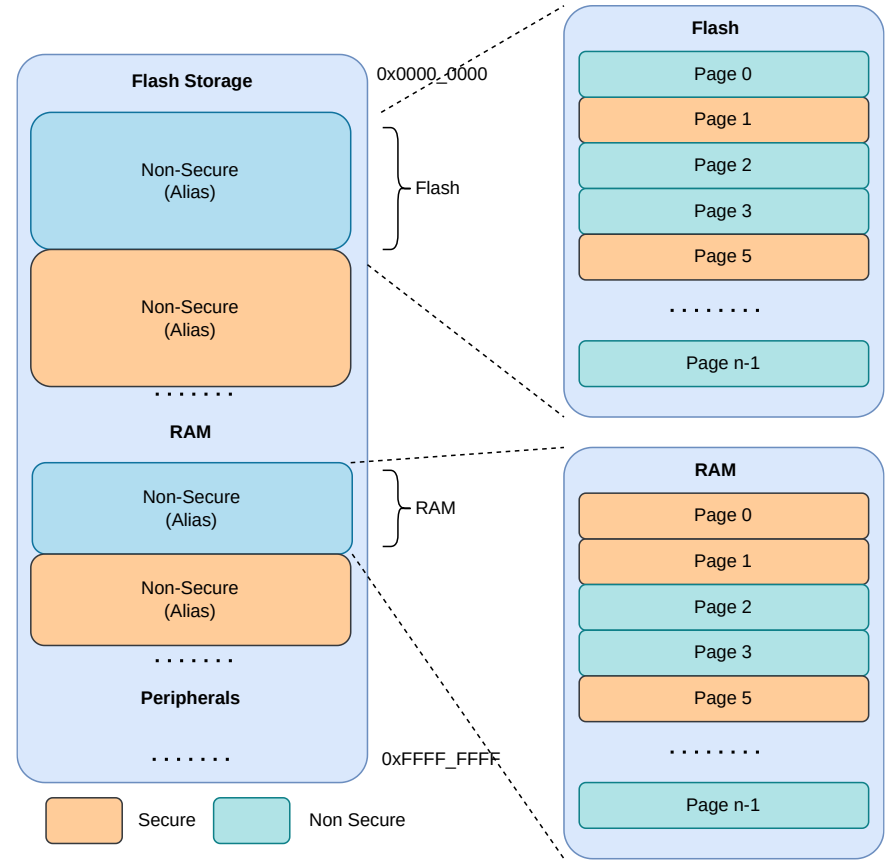

Peripheral Protection Unit

protects peripherals that are not *secure aware*

optional - depends on vendor

Each peripheral is marked as **NonSecure** or **Secure**.

- this includes interrupts that are fired

may be implemented similar to the MPC

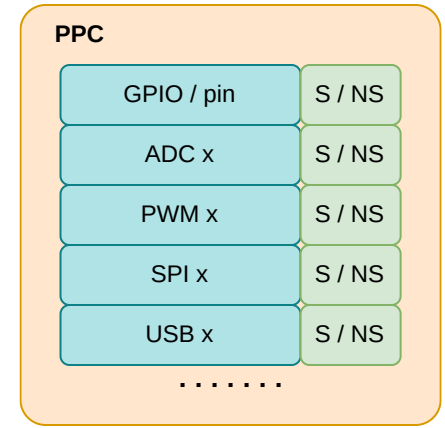

Switching modes

Calling *Secure API* from Non Secure code

- **Secure** code's compiler defines a *secure gateway entry* point in **NonSecure Callable** memory for every function that can be called from **Non Secure**
- **NonSecure** code calls the *secure gateway entry* point for the API
  - the instruction there has to be `SG`
  - the next instruction is the call to the actual API function
- **Secure** code returns using the `BXNS` instruction

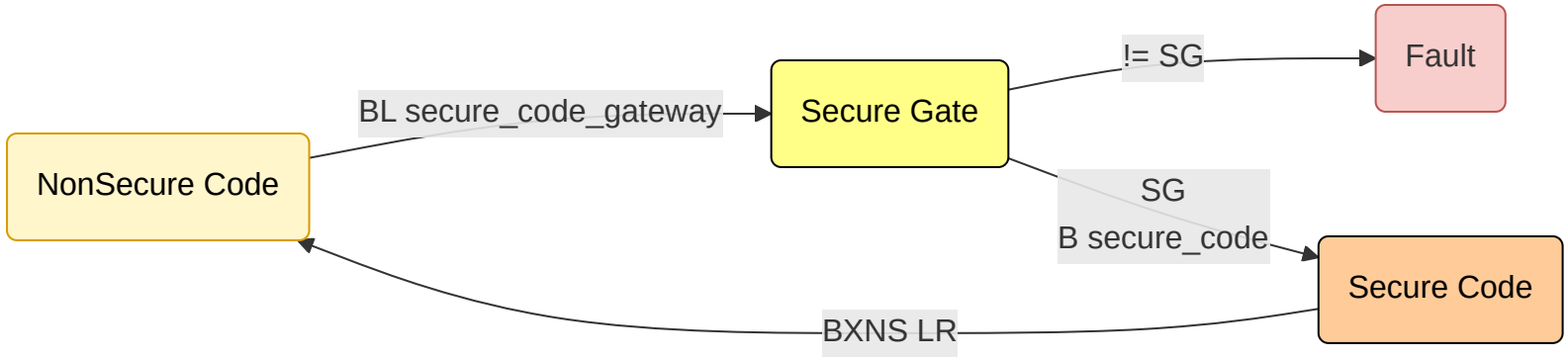

Switching modes

Calling *NonSecure functions* from Secure code

- **Secure** code calls the **Non Secure** function using `BLXNS`
  - the processor stacks the return address (linked address) and jumps to the function
- **NonSecure** code returns using the `BX FNC_RETURN` instruction
  - `FNC_RETURN` is a value in `LR` when the function starts

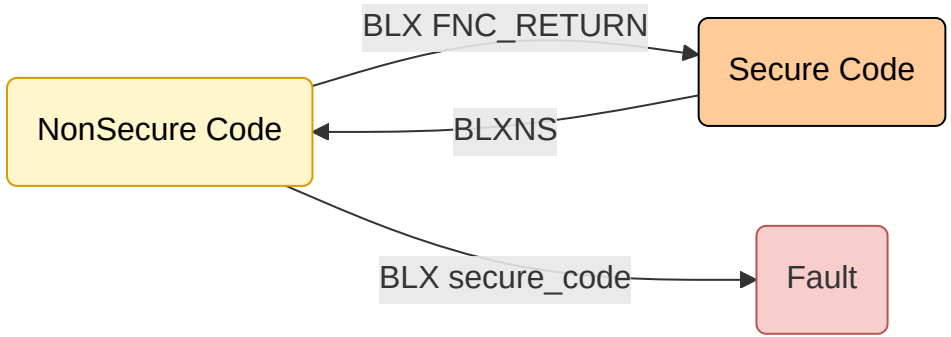

Secure Execution in Rust

unstable feature, use nightly version

Define a function that can be called from **Non Secure** code

```rust
#![feature(cmse_nonsecure_entry)]

#[no_mangle]
#[cmse_nonsecure_entry]
pub extern "C" fn entry_function(v: u32) -> u32 {
    v + 6
}
```

Limitations

- parameters can only be sent via registers, non secure code has no access to the secure stack
- uses C ABI

Secure Execution in Rust

unstable feature, use nightly version

Call a **Non Secure** function

```rust
#![feature(abi_c_cmse_nonsecure_call)]
#![no_std]

unsafe extern "C-cmse-nonsecure-call" non_secure_function(u8, u16, u32) -> f32;

fn run() {
  unsafe { non_secure_function(1, 100, 300) };
}
```

Limitations

- parameters should only be sent via registers, secure code should not access the non-secure stack
- uses C ABI

Boot

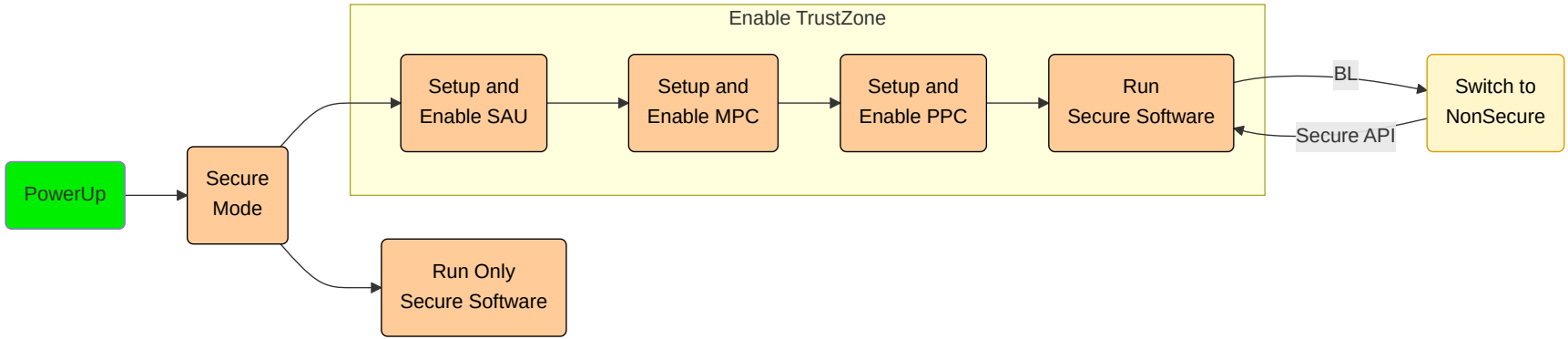

The processor starts in **Secure** mode

If it enables *SAU* it can switch to **NonSecure** mode

Trusted Firmware

Bibliography

for this section

Raspberry Pi Ltd, *RP2350 Datasheet*

- Chapter 10 - *Security*
  - Section 10.1 - *Overview (Arm)*
- Chapter 13 - *OTP*

ARM, *Trusted Firmware-M Documentation*

- *Introduction*
- *Getting Started*
- *Security*

Trusted Firmware-M

what it does

- Secure Boot
- Secure Update
- Secure API

Requires

- ARM microcontrollers that provide TrustZone
- Examples
  - STM32L5, STM32U5
  - RP2350

Secure Firmware / Bootloader

provided by the vendor

Depends on the MCU

- implements the TF-M standard (Trusted Firmware - Cortex M)
- certification levels 1 - 3
  - **Level 1**: Software-based isolation; foundational crypto, attestation, and secure boot.
  - **Level 2**: Adds protection against non-invasive attacks.
  - **Level 3**: Adds protection against side-channel and invasive attacks; often requires hardware features like tamper detection and secure key storage.

ARM TF-M Reference Implementation

open source

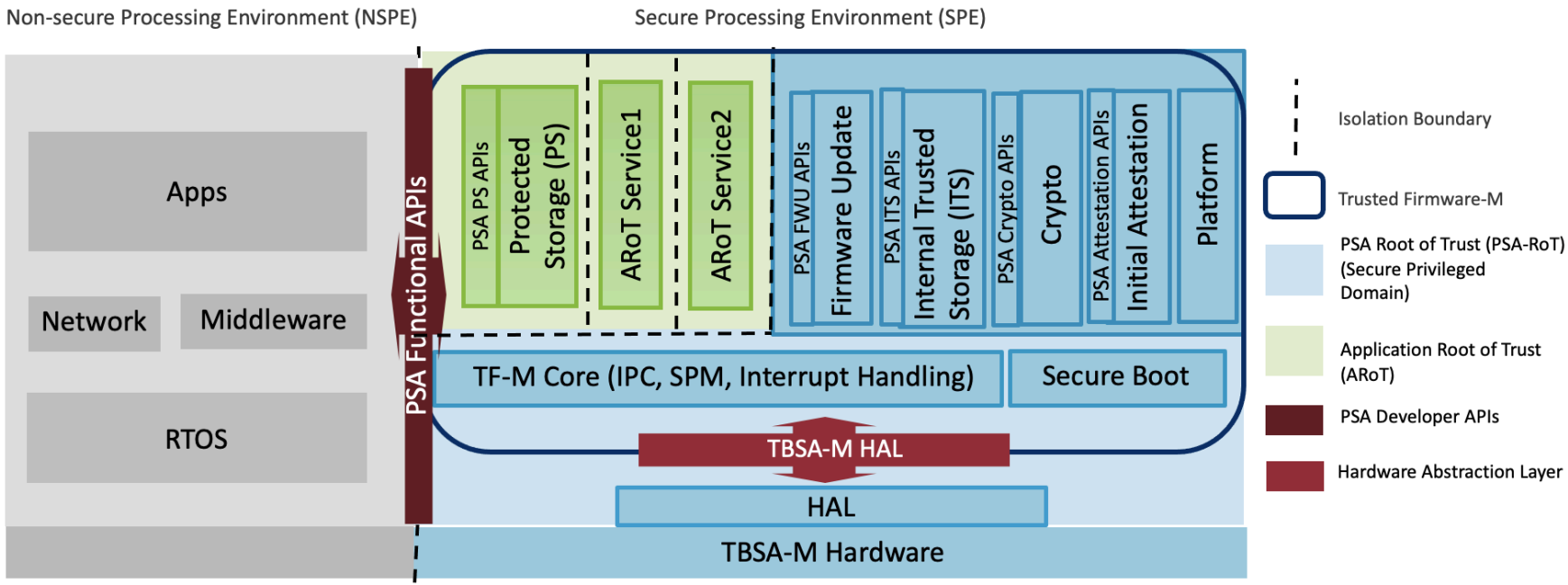

STM32 Implementation

Provided in SDK

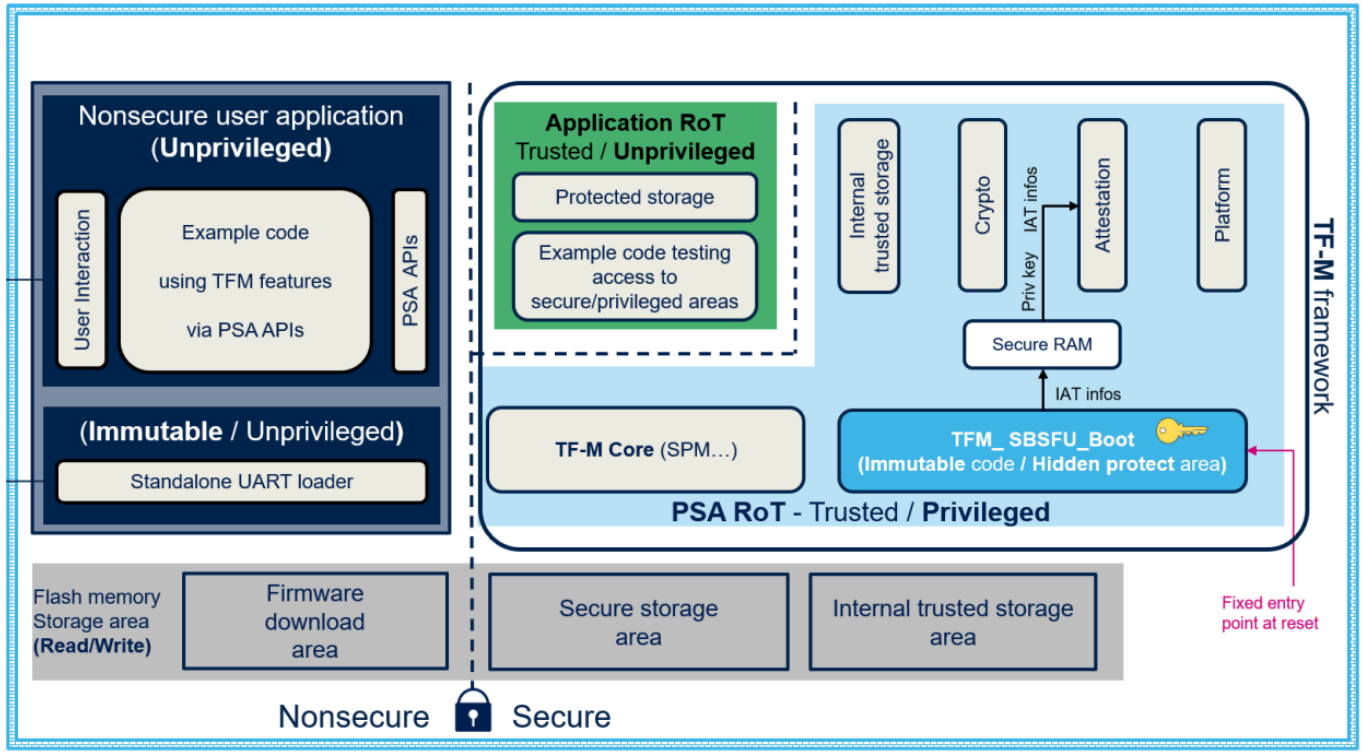

RP2350

- provides a ROM bootloader:
  - Secure Boot
  - Secure Update
  - Try-before-you-by
  - A/B partitioning
  - Rollback

Public Key Infrastructure

key pair

- private key 🔐
- public key 🔓
- algorithms
  - Rivest–Shamir–Adleman (*RSA*)
  - Elliptic Curves (*ECS*)
- hashing function
  - SHA 256

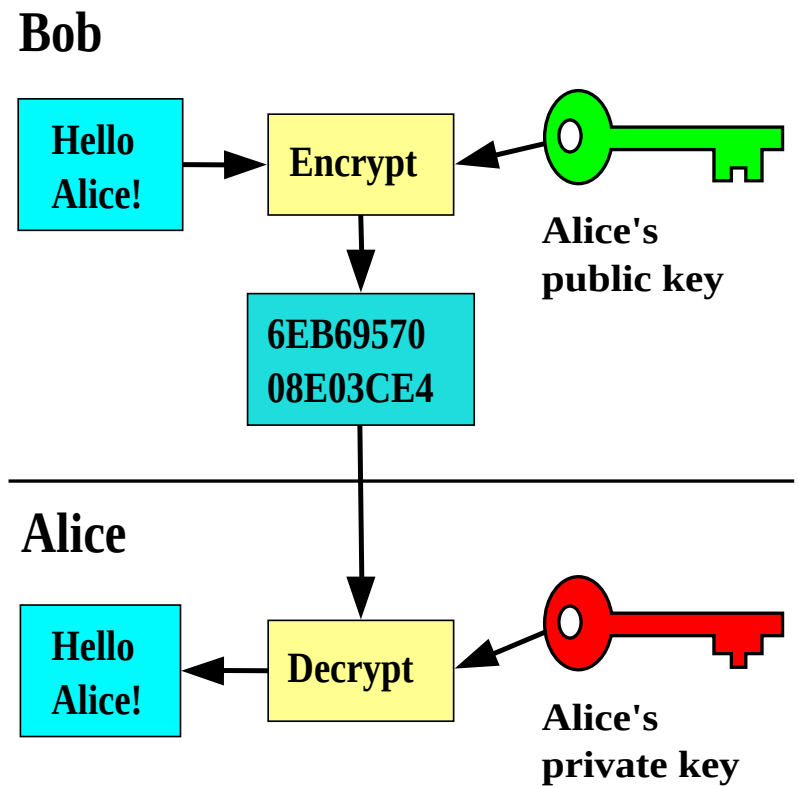

Digital Signatures

needs a *key pair* (RSA or ECS) and a *hashing algorithm*

Signing

1. data is **hashed**
2. the **hash** is **encrypted** using the **private key**
3. the **encrypted hash** is added to the data

Verifying

1. data is **hashed**
2. the **encrypted hash** is decrypted using the **public key**

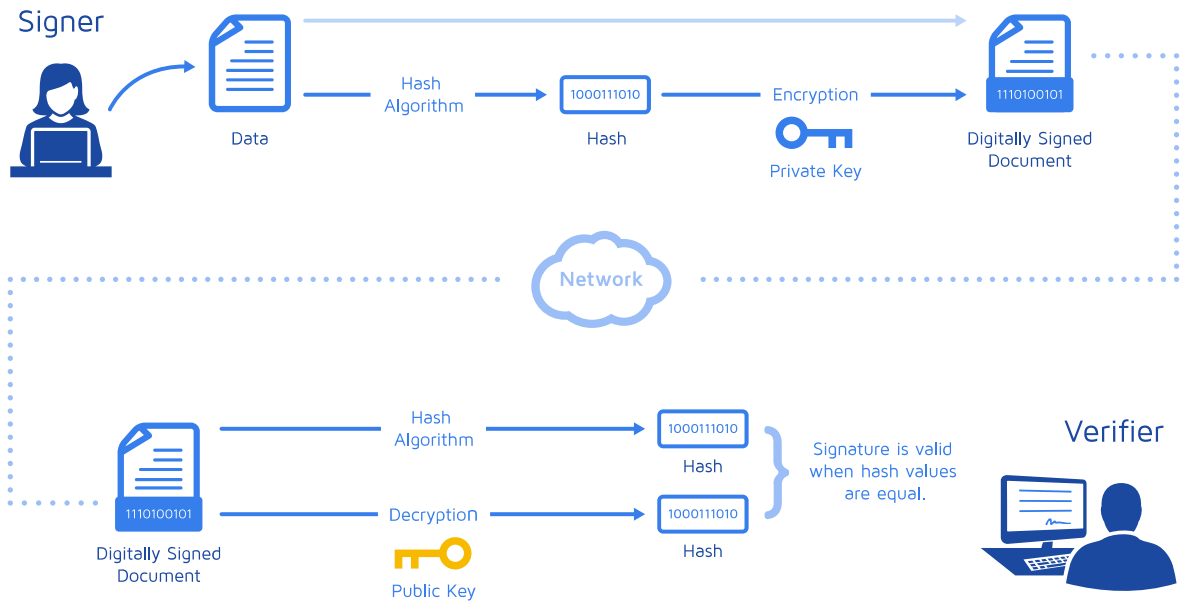

Signed Firmware

The firmware contains a digital signature

- `.vector_table`
- `.start_block` and `.end_block`
- `.text` and `.data`

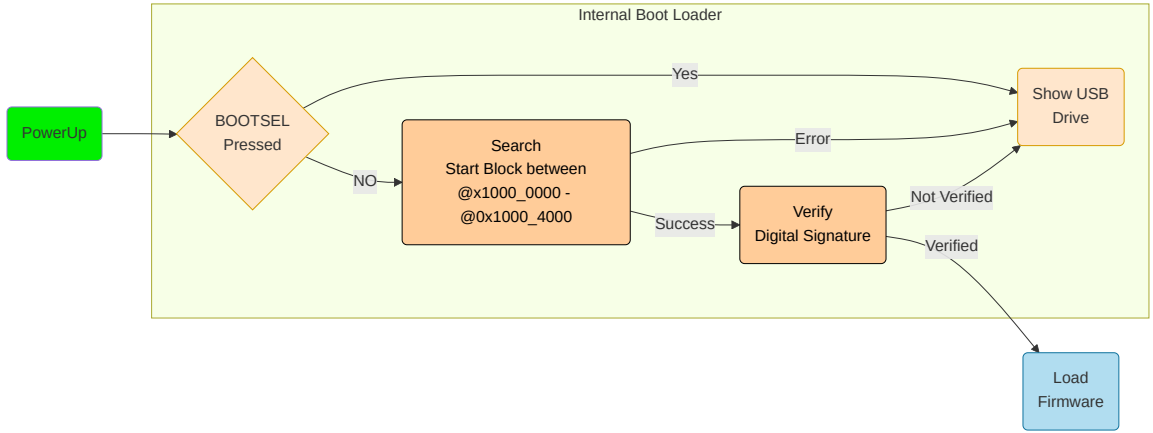

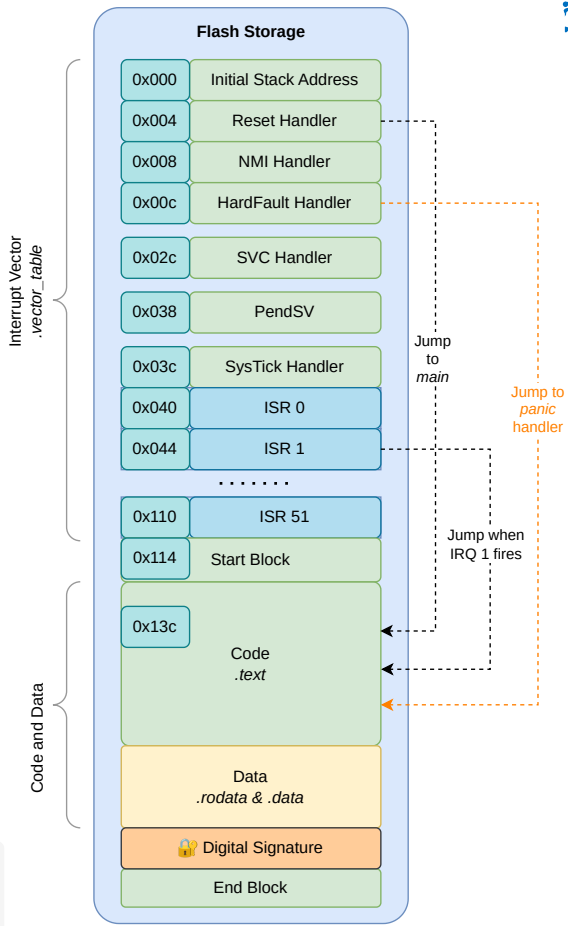

RP2350 has a bootloader that knows how to securely boot, other chips need custom secure firmware

OTP

one time programmable

OTP

flash memory that can be programmed only once

- Usually has three lock levels
  - Read/Write - works as normal flash
  - Read Only - works as ROM
  - Inaccessible - cannot be accessed
- The lock is not reversible
- Different vendors have different naming for these levels

Information in OTP

Stores information that:

- should not be modifiable
- should not be read *from the outside* using a debugger or using **Non Secure** software that reads and sends the information
- Secure Boot Enabled
- Debug in **Secure** mode Enabled
- Debug in **NonSecure** mode Enabled
- Bootloader's public keys
- Bootloader's public keys
- OTP's Pages Lock Level
- OTP's (read) key
- Debug key
- Secure Access Permissions

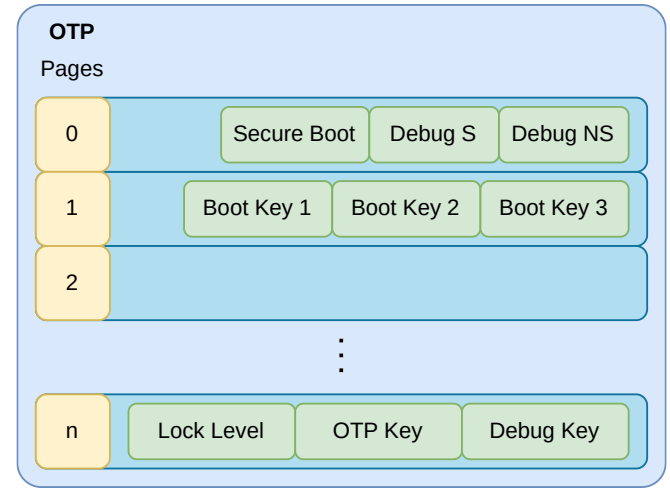

Provisioning Devices

how to securely provision a new device for production

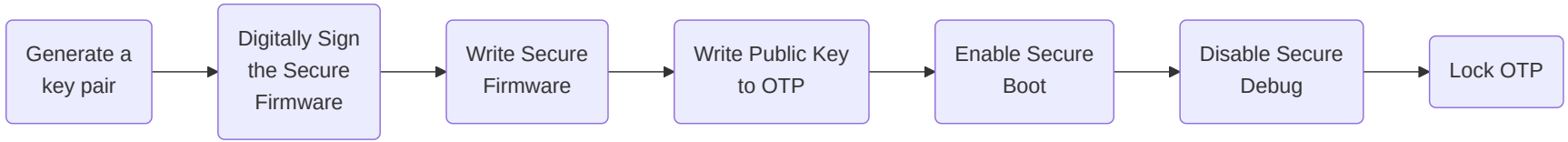

- Generate a different key pair for every device
  - store the private key securely
- Disabling debugging in secure mode will prevent any debugger from reading the OTP with the stored key
- Locking the OTP will prevent any writes to the key
- Enabling Secure Boot will prevent any unsigned Secure Firmware update
- **NonSecure** debug is still available, but it cannot replace the **Secure** Firmware
- Flashing **NonSecure** firmware is still possible

Decommissioning Devices

- Add the capability to the **Secure** firmware to increase the Lock Level to OTP
  - this will render OTP unusable
  - the system will not boot anymore as it cannot read the public keys
- Some OTP memories allow reversing locks:
  - they erase all the OTP
  - they erase the whole Flash

> This prevents reading the keys and secure firmware as secure debug becomes available

Use Cases

- POS devices
  - payment software should not be tempered with
- Smart Cards
  - keys should never be read from the device
  - software in these devices should not be tampered with
  - JavaCard (applets are uploadable)

Conclusion

- ARM TrustZone
  - Memory Attributes
  - Bus Attributes
- Trusted Firmware
- OTP