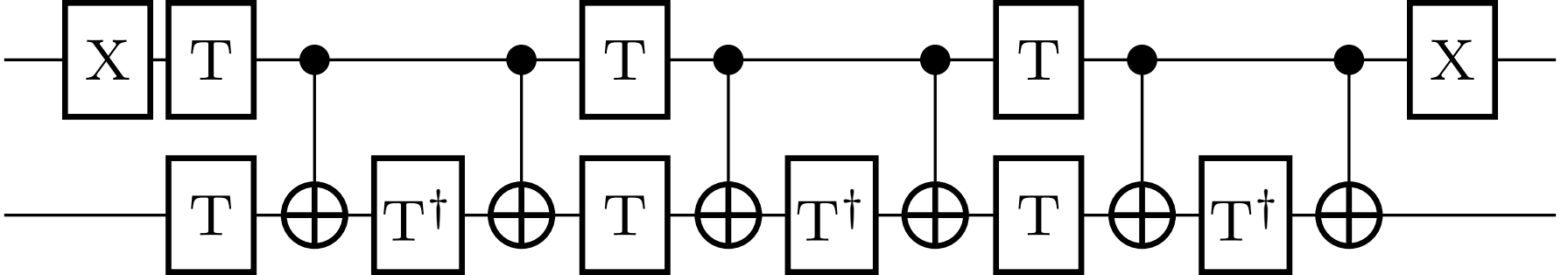
X
T
T
T
T
T
T
T
T
T
T
T
T
X