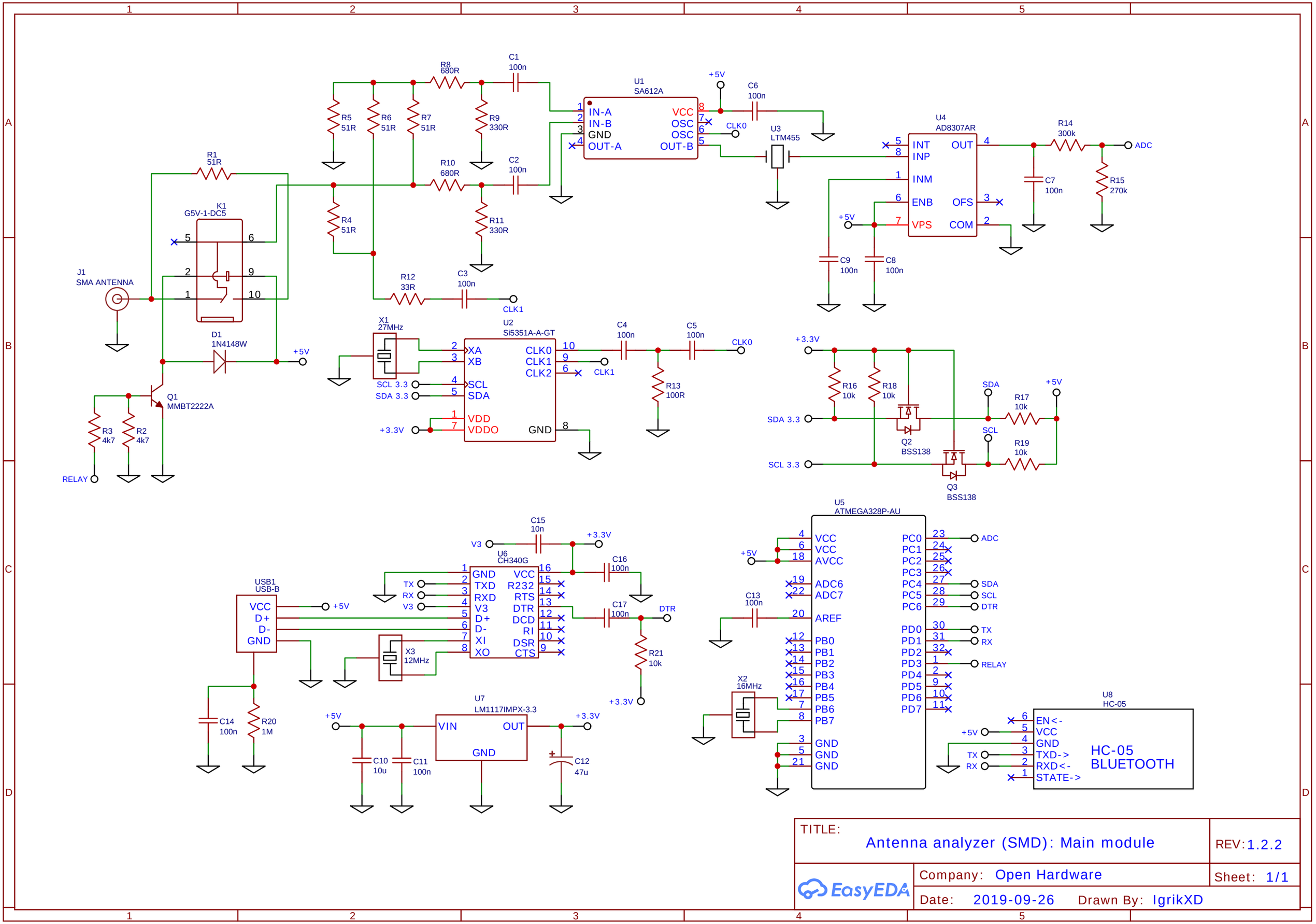
U1
SA612A
IN-A
IN-B
GND
OUT-A
VCC
OSC
OSC
OUT-B
U2
Si5351A-A-GT
XA
XB
SCL
SDA
VDD
VDDO
CLK0
CLK1
CLK2
GND
U3
LTM455
U4
AD8307AR
INT
INP
INM
ENB
VPS
OUT
OFS
COM
U5
ATMEGA328P-AU
VCC
VCC
AVCC
ADC6
ADC7
AREF
PB0
PB1
PB2
PB3
PB4
PB5
PB6
PB7
GND
GND
GND
PC0
PC1
PC2
PC3
PC4
PC5
PC6
PD0
PD1
PD2
PD3
PD4
PD5
PD6
PD7
U6
CH340G
GND
TXD
RXD
V3
D+
D-
XI
XO
VCC
R232
RTS
DTR
DCD
RI
DSR
CTS
U7
LM1117IMPX-3.3
VIN
OUT
GND
U8
HC-05
EN<-
VCC
GND
TXD->
RXD<-
STATE->
HC-05
BLUETOOTH
K1
G5V-1-DC5
J1
SMA ANTENNA
X1
27MHz
X2
16MHz
X3
12MHz
USB1
USB-B
VCC
D+
D-
GND
Q1
MMBT2222A
Q2
BSS138
Q3
BSS138
D1
1N4148W
R1 51R
R2 4k7
R3 4k7
R4 51R
R5 51R
R6 51R
R7 51R
R8 680R
R9 330R
R10 680R
R11 330R
R12 33R
R13 100R
R14 300k
R15 270k
R16 10k
R17 10k
R18 10k
R19 10k
R20 1M
R21 10k
C1 100n
C2 100n
C3 100n
C4 100n
C5 100n
C6 100n
C7 100n
C8 100n
C9 100n
C10 10u
C11 100n
C12 47u
C13 100n
C14 100n
C15 10n
C16 100n
C17 100n
+5V
+3.3V
+3.3V
SCL 3.3
SDA 3.3
CLK0
CLK1
ADC
SDA
SCL
DTR
TX
RX
RELAY
V3
SDA
SCL
TITLE:
Antenna analyzer (SMD): Main module
REV:1.2.2
Company: Open Hardware
Sheet: 1/1
Date: 2019-09-26
Drawn By: IgrikXD
EasyEDA