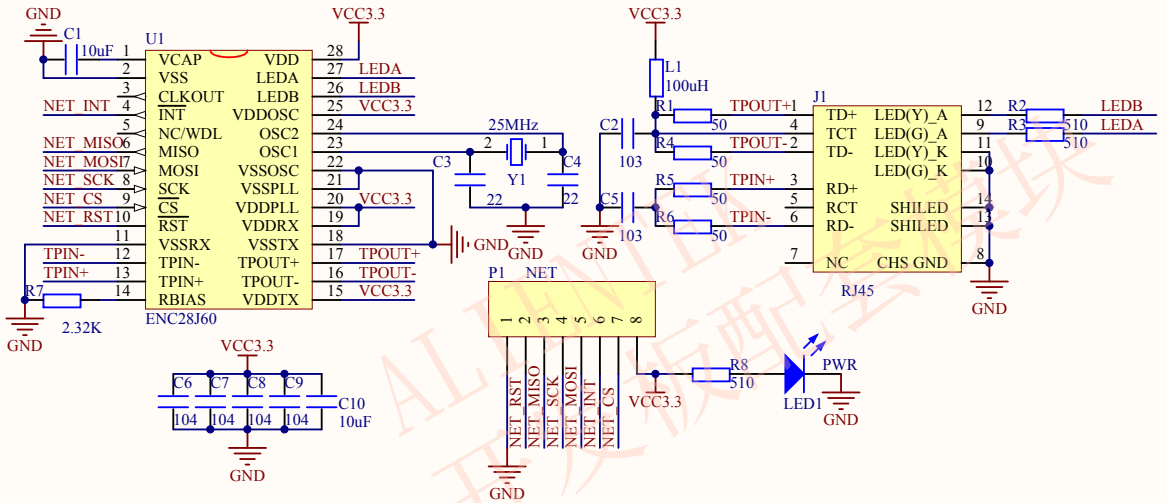

ALIENTEK STM32 开发板配套模块

开源电子网 www.openedv.com

Title: ENC28J60 Module	
Author: ATOM	Size: A4
Date: 2012-10-9	File: ENC28J60.SchDoc
Revision: 0	Version: V1.3

ALIENTEK

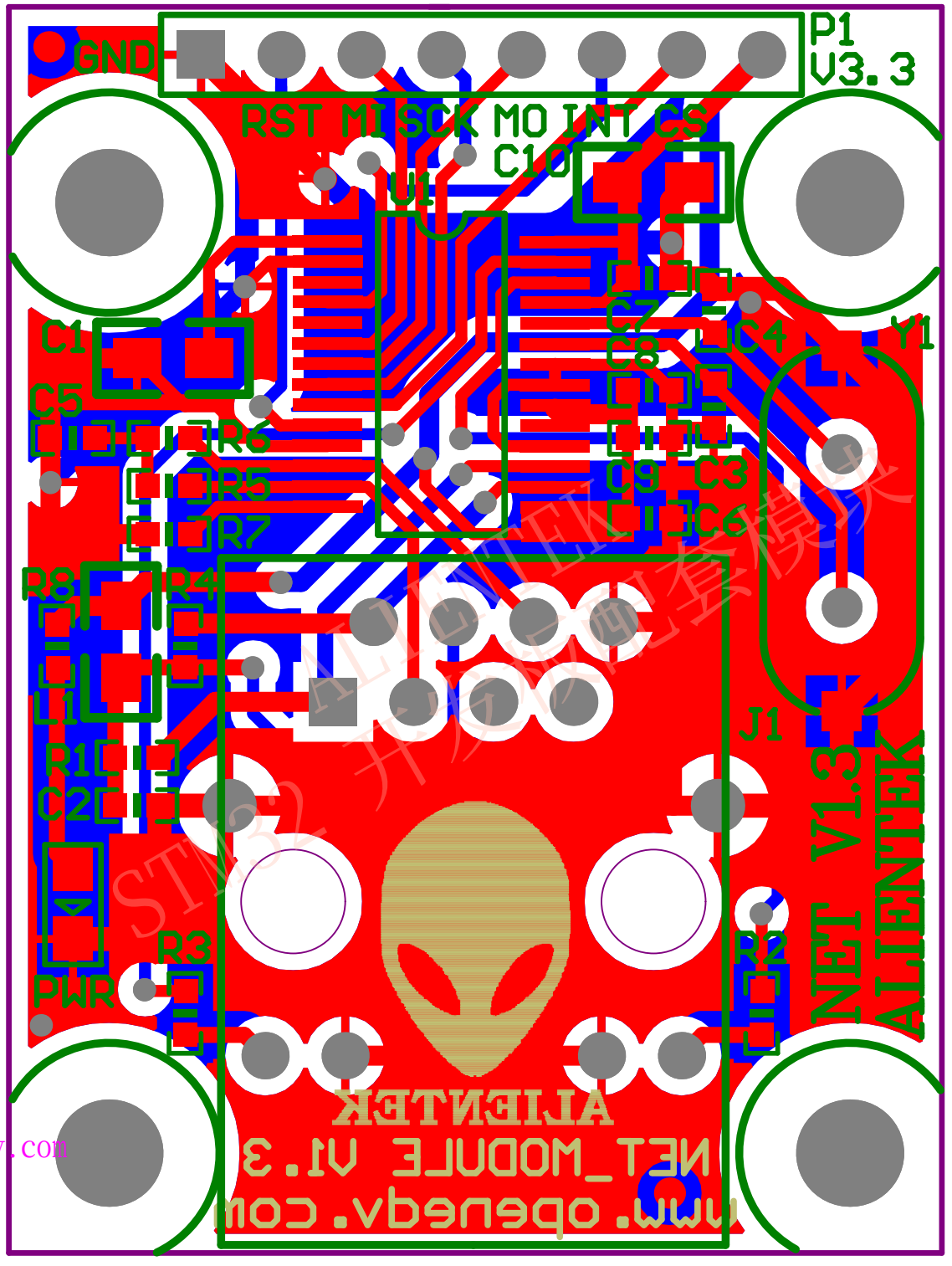

开源电子网 www.openedv.com