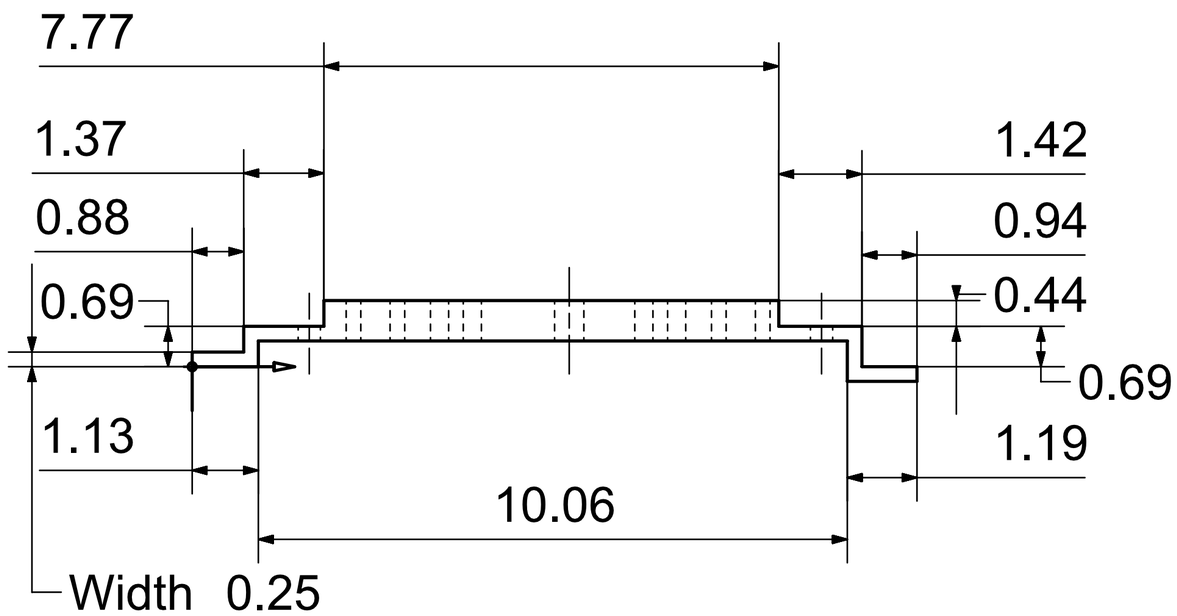

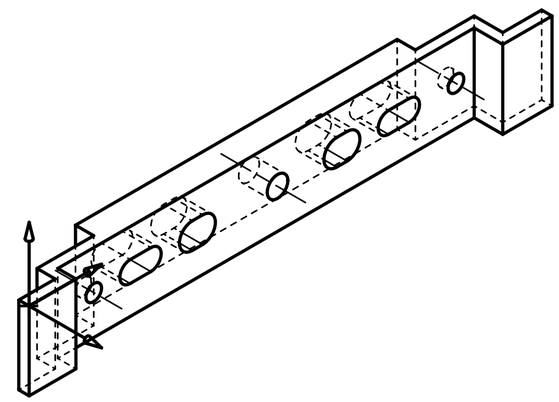

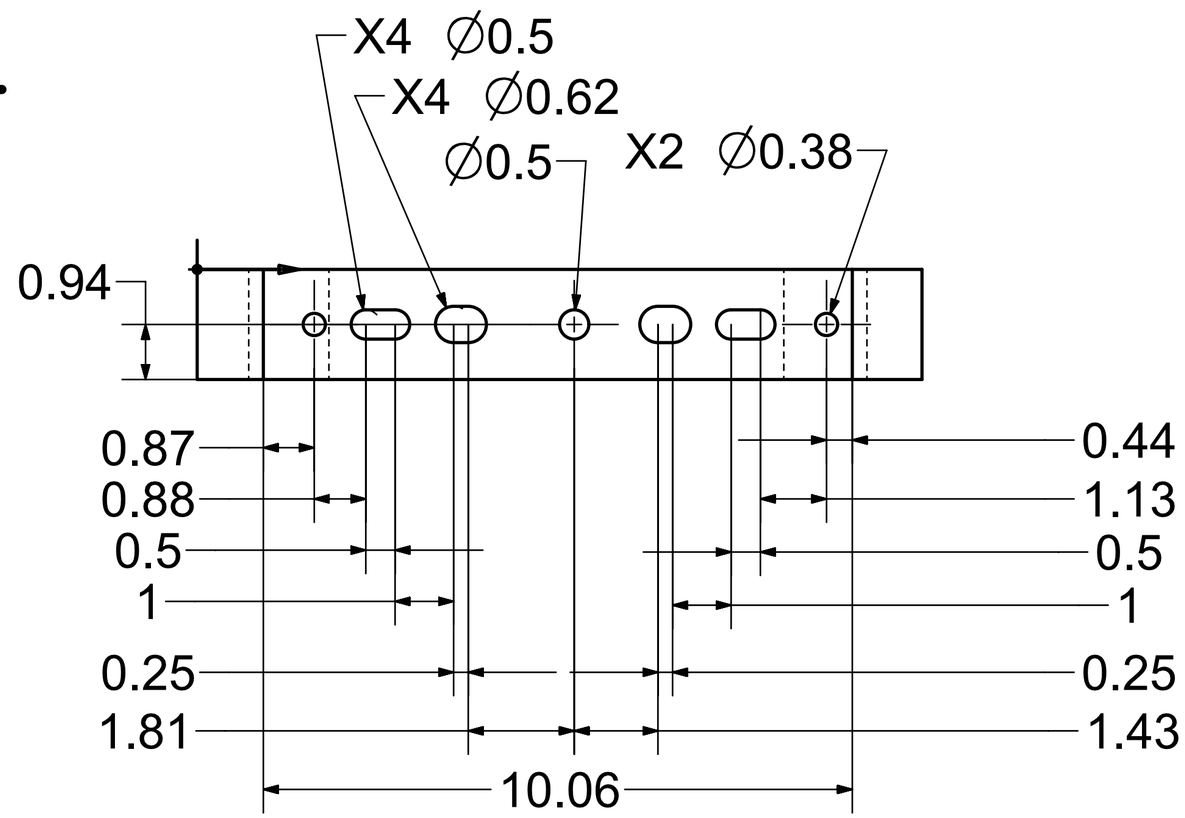

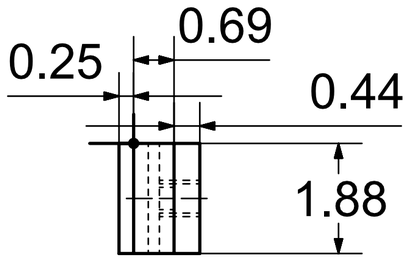

ALL DIMENSIONS IN INCHES

SIEMENS		THIS DRAWING HAS BEEN PRODUCED USING AN EXAMPLE TEMPLATE PROVIDED BY SIEMENS PLM SOFTWARE
FIRST ISSUED		TITLE
DRAWN BY	Alfarook Saleh	
CHECKED BY		
APPROVED BY		SIZE C / DRG NO. Saleh_gw5880_HW6_1 / SHEET REV A
		SCALE 1:1 / SHEET 1 OF 1