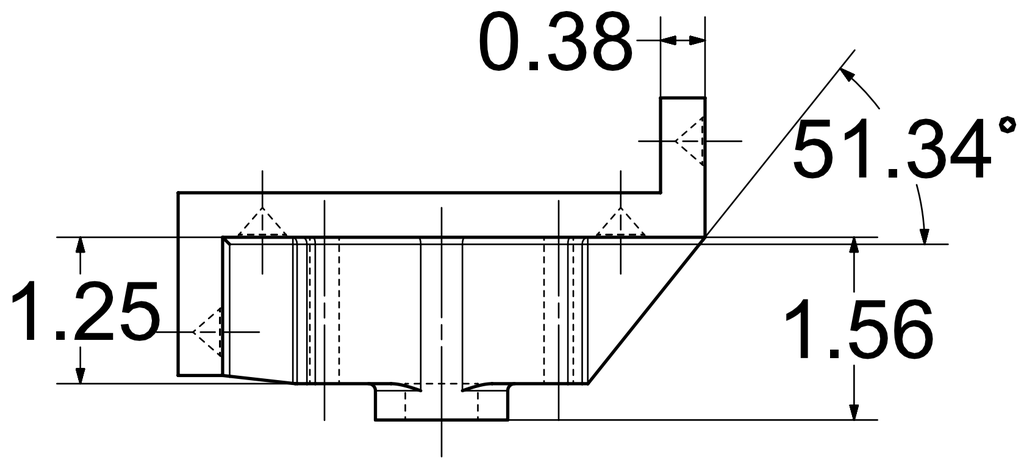


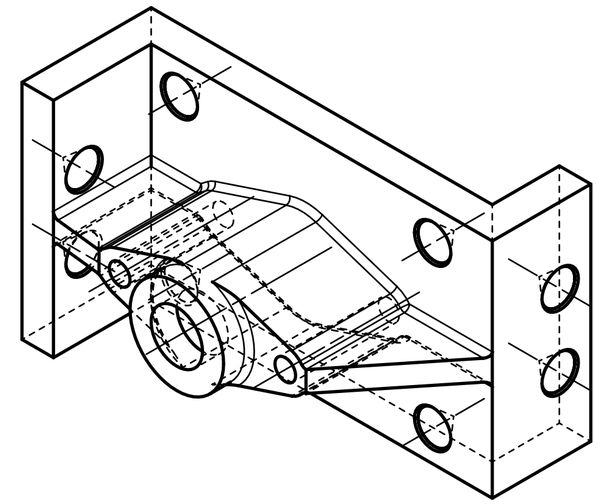

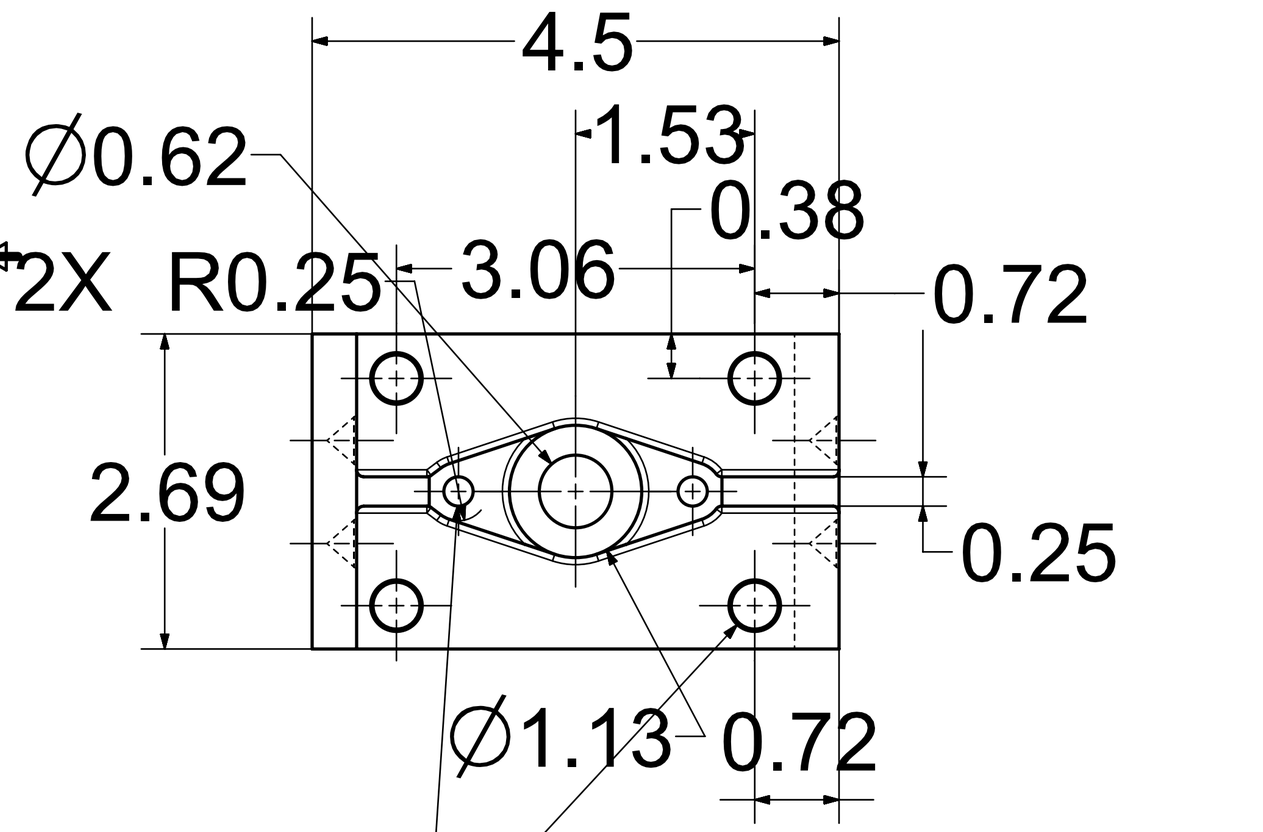


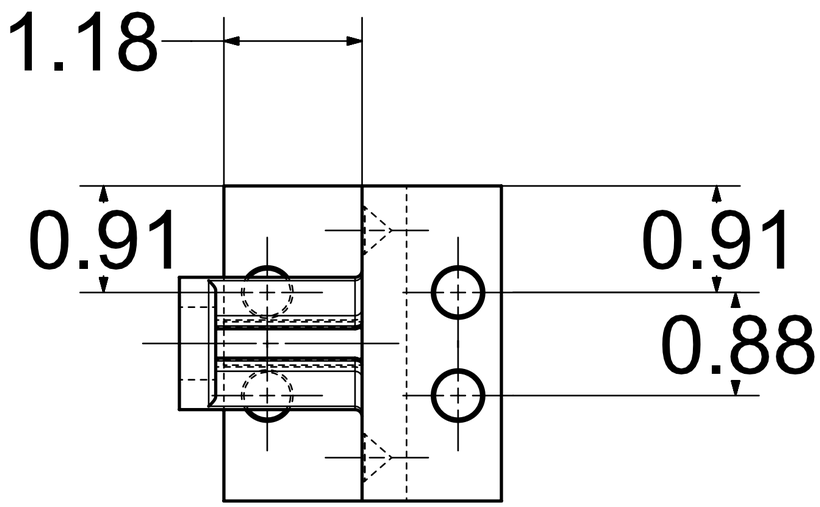


ALL DIMENSIONS IN INCHES

| | | |
|---|---|---|
| SIEMENS | | THIS DRAWING HAS BEEN PRODUCED USING AN EXAMPLE TEMPLATE PROVIDED BY SIEMENS PLM SOFTWARE |
| FIRST ISSUED | | TITLE |
| DRAWN BY | Alfarook Saleh | |
| CHECKED BY | | |
| APPROVED BY | | SIZE C / DRG NO. Saleh_gw5880_HW6_2 / SHEET REV A |
| | | SCALE 1:1 / SHEET 1 OF 1 |