Manualslib.com - The Global Manuals Library

CLEVO P775TM SERVICE MANUAL

Quick Links

Mainboard Overview - Top (Key Parts)
Removing the System Memory (Ram) from under the Keyboard
Updating the Flash Rom Bios

Table of Contents

Table of Contents
Overview
External Locator - Top View with LCD Panel Open
External Locator - Front & Right side Views
External Locator - Left Side & Rear View
External Locator - Bottom View
Mainboard Overview - Top (Key Parts)
Mainboard Overview - Bottom (Key Parts)
Mainboard Overview - Top (Connectors)
Mainboard Overview - Bottom (Connectors)
Overview
Maintenance Tools
Connections
Maintenance Precautions
Disassembly Steps
Removing the Battery
Removing and Installing the Hard Disk Drive
Removing the M.2 SSD Module
Removing the Primary System Memory (RAM)
Removing and Installing the Processor
Removing the System Memory (RAM) from Under the Keyboard
Removing the Wireless LAN Module
Wireless LAN, Combo Module Cables
Removing the WiGig Module
Removing the M.2 SSD Module
Removing and Installing the Video Card

Part List Illustration Location

Top

Bottom

LCD (LG-AU

LCD (AU

HDD

VGA (G1/G3

VGA (G2

Block Diagram

Processor 1/5

Processor 2/5

Processor 3/5

Processor 4/5

Processor 5/5

DDR4 CHA SO-DIMM_0

DDR4 CHA SO-DIMM_1

DDR4 CHB SO-DIMM_0

DDR4 CHB SO-DIMM_1

Panel, Inverter, CRT

Display Port A

Display Port B

HDMI

MXM PCI-E

Lynix Point 1/7

Lynix Point 2/7

Lynix Point 3/7

Lynix Point 4/7

Lynix Point 5/7

Lynix Point 6/7

Lynix Point 7/7

USB Charging

CCD, USB Port3

M.2 3G+USB & WLAN+BT

M.2 PCIE4X SSD1 & SSD2

Realtek ALC898

PCM1861 + TAS5766DCA

Subwoofer

EC IT8587

Second EC IT8587

Backlight Keyboard

LID SW, Fan, LED Conn

Fan, TP, FP, Multi-Con

LAN E2500

PS8338B + PS8330B

TBT

Power

TPS65982

Cardreader RTS5250

TPM SLB9655TT & NPCT420

VCCIO / 1P0A

DDR 1.2V/0.6VS/VCCPLL_OC

VDD3, VDD5

5V/5VS, 3V/3.3VS, 3.3VA

5VS_2/2.5V/NV3V3/3.3V_ON/5V_RUN

Fan CPU, VGA Power

VCore

VCore Output Stage

VCCSA / VCCGT
Power Charger, DC-In
P750DM HDD Board
P750DM Power LED Board
P750DM Click Board
P750DM Audio Board
P750DM Audio ESS DAC
P750DM Audio HP AMP
P750DM Audio Board
P775DM Audio Board
P775DM Audio ESS DAC
P775DM Audio HP AMP
P775DM Audio Board
P750DM BOT LED Board
P750DM LID Switch Board
P750DM Charge LED Board
P775DM Charge LED Board
P775DM Power LED Board
Power On Sequence
Other ManualsLib Projects

SERVICE MANUAL

P775TM (-G) / P775TM1 (-G)

notebook

Notebook Computer

P775TM (-G) / P775TM1 (-G)

Service Manual

Notice

The company reserves the right to revise this publication or to change its contents without notice. Information contained herein is for reference only and does not constitute a commitment on the part of the manufacturer or any subsequent vendor. They assume no responsibility or liability for any errors or inaccuracies that may appear in this publication nor are they in anyway responsible for any loss or damage resulting from the use (or misuse) of this publication.

This publication and any accompanying software may not, in whole or in part, be reproduced, translated, transmitted or reduced to any machine readable form without prior consent from the vendor, manufacturer or creators of this publication, except for copies kept by the user for backup purposes.

Brand and product names mentioned in this publication may or may not be copyrights and/or registered trademarks of their respective companies. They are mentioned for identification purposes only and are not intended as an endorsement of that product or its manufacturer.

Version 1.0
November 2017

Trademarks

Intel and **Intel Core** are trademarks of Intel Corporation.
Windows® is a registered trademark of Microsoft Corporation.
Other brand and product names are trademarks and/or registered trademarks of their respective companies.

About this Manual

This manual is intended for service personnel who have completed sufficient training to undertake the maintenance and inspection of personal computers.

It is organized to allow you to look up basic information for servicing and/or upgrading components of the ***P775TM (-G) / P775TM1 (-G)*** series notebook PC.

The following information is included:

Chapter 1, Introduction, provides general information about the location of system elements and their specifications.
Chapter 2, Disassembly, provides step-by-step instructions for disassembling parts and subsystems and how to upgrade elements of the system.

Appendix A, Part Lists
Appendix B, Schematic Diagrams
Appendix C, Updating the FLASH ROM BIOS

IMPORTANT SAFETY INSTRUCTIONS

Follow basic safety precautions, including those listed below, to reduce the risk of fire, electric shock and injury to persons when using any electrical equipment:

1. Do not use this product near water, for example near a bath tub, wash bowl, kitchen sink or laundry tub, in a wet basement or near a swimming pool.
2. Avoid using a telephone (other than a cordless type) during an electrical storm. There may be a remote risk of electrical shock from lightning.
3. Do not use the telephone to report a gas leak in the vicinity of the leak.
4. Use only the power cord and batteries indicated in this manual. Do not dispose of batteries in a fire. They may explode. Check with local codes for possible special disposal instructions.
5. This product is intended to be supplied by a Listed Power Unit with an AC Input of 100 - 240V, 50 - 60Hz, DC Output of 19.5V, 16.9A (**330** Watts) or 16.9A (**330** Watts) minimum AC/DC Adapter.

Instructions for Care and Operation

The notebook computer is quite rugged, but it can be damaged. To prevent this, follow these suggestions:

1. **Don't drop it, or expose it to shock.** If the computer falls, the case and the components could be damaged.

Do not expose the computer to any shock or vibration. 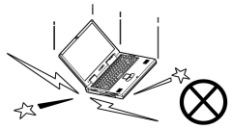	*Do not place it on an unstable surface.* 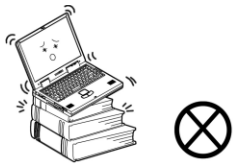	*Do not place anything heavy on the computer.* 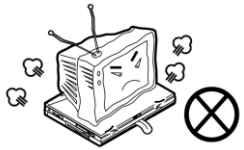

2. **Keep it dry, and don't overheat it.** Keep the computer and power supply away from any kind of heating element. This is an electrical appliance. If water or any other liquid gets into it, the computer could be badly damaged.

Do not expose it to excessive heat or direct sunlight.	*Do not leave it in a place where foreign matter or moisture may affect the system.*	*Don't use or store the computer in a humid environment.* 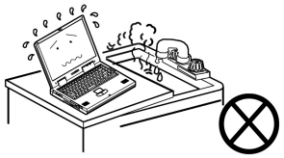	*Do not place the computer on any surface which will block the vents.* 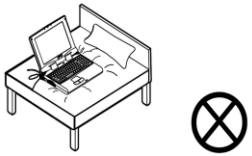

3. **Follow the proper working procedures for the computer**. Shut the computer down properly and don't forget to save your work. Remember to periodically save your data as data may be lost if the battery is depleted.

Do not turn off the power until you properly shut down all programs. 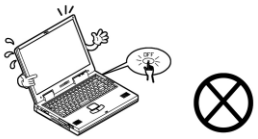	*Do not turn off any peripheral devices when the computer is on.* 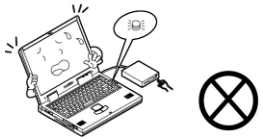	*Do not disassemble the computer by yourself.*	*Perform routine maintenance on your computer.*

Removal Warning

When removing any cover(s) and screw(s) for the purposes of device upgrade, remember to replace the cover(s) and screw(s) before restoring power to the system.

Also note the following when the cover is removed:

- Hazardous moving parts.
- Keep away from moving fan blades

Power Safety Warning

Before you undertake any upgrade procedures, make sure that you have turned off the power, and disconnected all peripherals and cables (including telephone lines and power cord). You must also remove your battery in order to prevent accidentally turning the machine on.

4. **Avoid interference.** Keep the computer away from high capacity transformers, electric motors, and other strong magnetic fields. These can hinder proper performance and damage your data.
5. **Take care when using peripheral devices**.

Use only approved brands of peripherals. 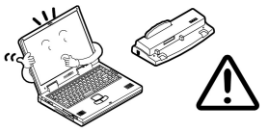	*Unplug the power cord before attaching peripheral devices.* 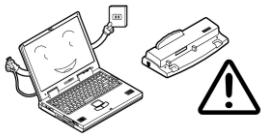

Power Safety

The computer has specific power requirements:

- Only use a power adapter approved for use with this computer.
- Your AC adapter may be designed for international travel but it still requires a steady, uninterrupted power supply. If you are unsure of your local power specifications, consult your service representative or local power company.
- The power adapter may have either a 2-prong or a 3-prong grounded plug. The third prong is an important safety feature; do not defeat its purpose. If you do not have access to a compatible outlet, have a qualified electrician install one.
- When you want to unplug the power cord, be sure to disconnect it by the plug head, not by its wire.
- Make sure the socket and any extension cord(s) you use can support the total current load of all the connected devices.
- Before cleaning the computer, make sure it is disconnected from any external power supplies.

Do not plug in the power cord if you are wet.	*Do not use the power cord if it is broken.* 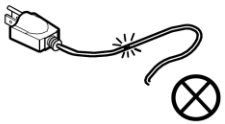	*Do not place heavy objects on the power cord.* 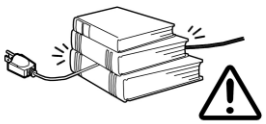

Battery Precautions

- Only use batteries designed for this computer. The wrong battery type may explode, leak or damage the computer.
- Do not continue to use a battery that has been dropped, or that appears damaged (e.g. bent or twisted) in any way. Even if the computer continues to work with a damaged battery in place, it may cause circuit damage, which may possibly result in fire.
- Recharge the batteries using the notebook's system. Incorrect recharging may make the battery explode.
- Do not try to repair a battery pack. Refer any battery pack repair or replacement to your service representative or qualified service personnel.
- Keep children away from, and promptly dispose of a damaged battery. Always dispose of batteries carefully. Batteries may explode or leak if exposed to fire, or improperly handled or discarded.
- Keep the battery away from metal appliances.
- Affix tape to the battery contacts before disposing of the battery.
- Do not touch the battery contacts with your hands or metal objects.

Battery Guidelines

The following can also apply to any backup batteries you may have.

- If you do not use the battery for an extended period, then remove the battery from the computer for storage.
- Before removing the battery for storage charge it to 60% - 70%.
- Check stored batteries at least every 3 months and charge them to 60% - 70%.

Battery Disposal

The product that you have purchased contains a rechargeable battery. The battery is recyclable. At the end of its useful life, under various state and local laws, it may be illegal to dispose of this battery into the municipal waste stream. Check with your local solid waste officials for details in your area for recycling options or proper disposal.

Caution

Danger of explosion if battery is incorrectly replaced. Replace only with the same or equivalent type recommended by the manufacturer. Discard used battery according to the manufacturer's instructions.

Battery Level

Click the battery icon in the taskbar to see the current battery level and charge status. A battery that drops below a level of 10% will not allow the computer to boot up. Make sure that any battery that drops below 10% is recharged within one week.

Related Documents

You may also need to consult the following manual for additional information:

User's Manual on Disc
This describes the notebook PC's features and the procedures for operating the computer and its ROM-based setup program. It also describes the installation and operation of the utility programs provided with the notebook PC.

System Startup

1. Remove all packing materials.
2. Place the computer on a stable surface.
3. Insert the battery and make sure it is locked in position.
4. Securely attach any peripherals you want to use with the computer (e.g. keyboard and mouse) to their ports.
5. **When first setting up the computer use the following procedure** (as to safeguard the computer during shipping, the battery will be locked to not power the system until first connected to the AC/DC adapter and initially set up as below):
   - Attach the AC/DC adapter cord to the DC-In jack at the rear of the computer, then plug the AC power cord into an outlet, and connect the AC power cord to the AC/DC adapter and **leave it there for 6 seconds or longer**.
   - Remove the adapter cord from the computer's DC-In jack, and then plug it back in again; the battery will now be unlocked.
6. Use one hand to raise the lid/LCD to a comfortable viewing angle (do not to exceed **135** degrees); use the other hand (as illustrated in ***Figure 1***) to support the base of the computer (**Note**: **Never** lift the computer by the lid/LCD).
7. Press the power button to turn the computer "on".

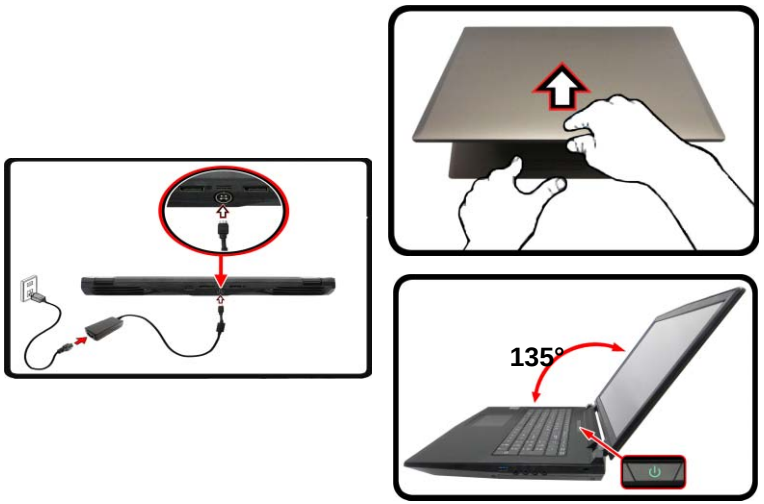

Figure 1
Opening the Lid/LCD/ Computer with AC/DC Adapter Plugged-In

Contents

Introduction 1-1

Overview 1-1
External Locator - Top View with LCD Panel Open 1-4
External Locator - Front & Right side Views 1-5
External Locator - Left Side & Rear View 1-6
External Locator - Bottom View 1-7
Mainboard Overview - Top (Key Parts) 1-8
Mainboard Overview - Bottom (Key Parts) 1-9
Mainboard Overview - Top (Connectors) 1-10
Mainboard Overview - Bottom (Connectors) 1-11

Disassembly 2-1

Overview 2-1
Maintenance Tools 2-2
Connections 2-2
Maintenance Precautions 2-3
Disassembly Steps 2-4
Removing the Battery 2-5
Removing and Installing the Hard Disk Drive 2-6
Removing the M.2 SSD Module 2-9
Removing the Primary System Memory (RAM) 2-10
Removing and Installing the Processor 2-12
Removing the System Memory (RAM) from Under the Keyboard ..2-15
Removing the Wireless LAN Module 2-17
Wireless LAN, Combo Module Cables 2-18
Removing the WiGig Module 2-19
Removing the M.2 SSD Module 2-20
Removing and Installing the Video Card 2-22

Part Lists A-1

Part List Illustration Location A-2
Top A-3
Bottom A-4
LCD (LG-AU) A-5
LCD (AU) A-6
MB A-7
HDD A-8
VGA (G1/G3) A-9
VGA (G2) A-10

Schematic Diagrams.....B-1

Block Diagram B-2
Processor 1/5 .....B-3
Processor 2/5 .....B-4
Processor 3/5 .....B-5
Processor 4/5 .....B-6
Processor 5/5 .....B-7
DDR4 CHA SO-DIMM_0 .....B-8
DDR4 CHA SO-DIMM_1 .....B-9
DDR4 CHB SO-DIMM_0 .....B-10
DDR4 CHB SO-DIMM_1 .....B-11
Panel, Inverter, CRT B-12
Display Port A B-13
Display Port B B-14
HDMI B-15
MXM PCI-E B-16
Lynix Point 1/7 .....B-17
Lynix Point 2/7 .....B-18
Lynix Point 3/7 .....B-19
Lynix Point 4/7 .....B-20
Lynix Point 5/7 .....B-21

Lynix Point 6/7 ..... B-22
Lynix Point 7/7 ..... B-23
USB Charging B-24
CCD, USB Port3 ..... B-25
M.2 3G+USB & WLAN+BT B-26
M.2 PCIE4X SSD1 & SSD2 ..... B-27
Realtek ALC898 ..... B-28
PCM1861 + TAS5766DCA B-29
Subwoofer B-30
EC IT8587 ..... B-31
Second EC IT8587 ..... B-32
Backlight Keyboard B-33
LID SW, Fan, LED Conn B-34
Fan, TP, FP, Multi-Con B-35
LAN E2500 ..... B-36
PS8338B + PS8330B B-37
TBT B-38
Power B-39
TPS65982 ..... B-40
TPS65982 ..... B-41
Cardreader RTS5250 ..... B-42
TPM SLB9655TT & NPCT420 ..... B-43
VCCIO / 1P0A B-44
DDR 1.2V/0.6VS/VCCPLL_OC B-45
VDD3, VDD5 ..... B-46
5V/5VS, 3V/3.3VS, 3.3VA B-47
5VS_2/2.5V/NV3V3/3.3V_ON/5V_RUN B-48
Fan CPU, VGA Power B-49
VCore B-50
VCore Output Stage B-51
VCCSA / VCCGT B-52
Power Charger, DC-In B-53
P750DM HDD Board B-54
P750DM Power LED Board B-55
P750DM Click Board B-56
P750DM Audio Board B-57
P750DM Audio ESS DAC B-58
P750DM Audio HP AMP B-59
P750DM Audio Board B-60
P775DM Audio Board B-61
P775DM Audio ESS DAC B-62
P775DM Audio HP AMP B-63
P775DM Audio Board B-64
P750DM BOT LED Board B-65
P750DM LID Switch Board B-66
P750DM Charge LED Board B-67
P775DM Charge LED Board B-68
P775DM Power LED Board B-69
Power On Sequence B-70

Updating the FLASH ROM BIOS..... C-1

Chapter 1: Introduction

Overview

This manual covers the information you need to service or upgrade the ***P775TM (-G) / P775TM1 (-G)*** series notebook computer. Information about operating the computer (e.g. getting started, and the *Setup* utility) is in the *User's Manual*. Information about drivers (e.g. VGA & audio) is also found in *User's Manual*. That manual is shipped with the computer.

Operating systems (e.g. *Windows 10*, etc.) have their own manuals as do application software (e.g. word processing and database programs). If you have questions about those programs, you should consult those manuals.

The ***P775TM (-G) / P775TM1 (-G)*** series notebook is designed to be upgradeable. See ***Disassembly on page 2 - 1*** for a detailed description of the upgrade procedures for each specific component. Please note the warning and safety information indicated by the "🔔" symbol.

The balance of this chapter reviews the computer's technical specifications and features.

Specifications

Latest Specification Information

The specifications listed here are correct at the time of sending them to the press. Certain items (particularly processor types/speeds) may be changed, delayed or updated due to the manufacturer's release schedule. Check with your service center for more details.

CPU Speed & Computer in DC Mode

Note that when the computer is in DC mode (powered by the battery only) the CPU may not run at full speed. This is a design feature implemented in order to protect the battery.

Processor Options

i7-8700K (3.70GHz)*

12MB Smart Cache, **14nm**, DDR4-2666MHz, TDP 95W

i5-8600K (3.60GHz)*

9MB Smart Cache, **14nm**, DDR4-2666MHz, TDP 95W

i7-8700 (3.20GHz)

12MB Smart Cache, **14nm**, DDR4-2666MHz, TDP 65W

i5-8400 (2.80GHz)

6MB Smart Cache, **14nm**, DDR4-2666MHz, TDP 65W

i3-8350K (4.00GHz) (for P775TM/P775TM1 only)

8MB Smart Cache, **14nm**, DDR4-2400MHz, TDP 91W

i3-8100 (3.60GHz) (for P775TM/P775TM1 only)

6MB Smart Cache, **14nm**, DDR4-2400MHz, TDP 65W

**Supports Intel® XTU overclocking technology depending on CPU SKU*

LCD Options

17.3" (43.94cm), 16:9, QFHD (3840x2160)/FHD (1920x1080)

Core Logic

Intel® Z370 Chipset

BIOS

AMI BIOS (64Mb SPI Flash-ROM)

Pointing Device

Built-In Secure Pad (with Microsoft PTP Multi Gesture & Scrolling Functionality)

Keyboard

Full Color **Illuminated** Full-size Winkey Keyboard (with numeric keypad and anti-ghost keys)

Video Adapter Options

NVIDIA® GeForce GTX 1060 PCIe Video Card

6GB GDDR5 Video RAM on board

Supports GPU Overclocking

NVIDIA® GeForce GTX 1070 / GTX 1080 PCIe Video Card (for P775TM1(-G) only)

8GB GDDR5 Video RAM

Supports GPU Overclocking

Memory

Four 260 Pin SO-DIMM Sockets Supporting **DDR4 2400 MHz** Memory

(The real memory operating frequency depends on the FSB of the processor.)

Memory Expandable from **8GB** (**minimum**) up to **64GB** (**maximum**)

Support XMP 2666/3000 MHz (XMP depends on processor)

SO-DIMM Memory Types

All SO-DIMM memory modules installed in the system should be identical (the same size and brand) in order to prevent unexpected system behavior.

Do not mix SO-DIMM memory module sizes and brands otherwise unexpected system problems may occur.

Security

Security (Kensington® Type) Lock Slot

BIOS Password

Fingerprint Reader Module

Trusted Platform Module 2.0

Intel PTT for Systems Without TPM Hardware

Storage

Two changeable 2.5" (6cm) 7.0mm (h)/ 9.5mm (h) SATA (Serial) Hard Disk Drives/Solid State Drives (SSD) supporting RAID level 0/1

(**Factory Option**) Two M.2 **SATA** 2280 SSDs supporting RAID level 0/1

Or

(**Factory Option**) Two M.2 **PCIe**

Gen3 x4 2280 SSDs supporting RAID level 0/1

Audio

High Definition Audio Compliant Interface

S/PDIF Digital Output

Two Speakers

Sound Blaster Audio

ESS™ SABRE HIFI DAC for High Resolution Headphone Audio

Built-In Array Microphone

Sub-Woofer

Note: External 7.1CH Audio Output Supported by 2-In-1 Audio Jacks, Microphone, Line-In and Line- Out Jacks

Interface

One USB 3.1 Gen 2 Type C Port

One USB 3.1 Gen 2/Thunderbolt 3 Combo Port (Type C)

Two Mini DisplayPorts (1.3)

One HDMI-Out Port

One 2-In-1 Audio Jack (Headphone/ S/PDIF Optical Output Combo Jack)

One Microphone-In Jack

One Line-Out Jack

One Line-In Jack

One RJ-45 LAN Jacks

One DC-In Jack

Four USB 3.0 (USB 3.1 Gen 1) Ports (Including one AC/DC Powered USB port)

Communication

Built-In Qualcomm 10/100/1000Mb Base-TX Ethernet LAN

2.0M FHD PC Camera Module

WLAN/ Bluetooth M.2 Modules:

(**Factory Option**) Intel® Wireless-AC 8265 Wireless LAN (**802.11ac**) + Bluetooth 4.1

(**Factory Option**) Qualcomm® Atheros Killer™ Wireless-AC 1535 Wireless LAN (**802.11ac**) + Bluetooth 4.1

(**Factory Option**) Qualcomm® Wireless LAN (**802.11ac/ad**) + Bluetooth 4.1

M.2 Slots

Slot 1 for **Combo WLAN and Bluetooth** Module

Slot 2 for **SATA** or **PCIe Gen3 x4 SSD**

Slot 3 for **SATA** or **PCIe Gen3 x4 SSD**

Card Reader

Embedded Multi-In-1 Push-Push Card Reader

MMC (MultiMedia Card) / RS MMC

SD (Secure Digital) / Mini SD / SDHC/ SDXC (up to UHS-II)

Features

Supports NVIDIA® G-SYNC™ Technology

(NVIDIA® G-SYNC™ Technology is supported by some LCD panels and GTX series video adapters Only)

Intel® Optane™ Technology

Virtual Reality Ready (*i5 & i7 Processor only*)

Supports Windows® 10 Cortana with Voice

(**Factory Option**) USB Drive

Environmental Spec

Temperature

Operating: 10°C - 35°C

Non-Operating: -20°C - 60°C

Relative Humidity

Operating: 20% - 80%

Non-Operating: 10% - 90%

Power

Removable 8-cell Smart Lithium-Ion Battery Pack, 82WH

Full Range AC/DC Adapter

AC Input: 100 - 240V, 50 - 60Hz

DC Output: 19.5V, 11.8A (**230W**) - P775TM(-G)

DC Output: 19.5V, 16.9A (**330W**) - P775TM1(-G)

Dimensions & Weight

418mm (w) * 295.3mm (d) * 40.9mm (h)

3.9kg (Barebone System with Video Card and 82WH Battery)

Or

4.3kg (Barebone System with Video Card and 82WH Battery)

External Locator - Top View with LCD Panel Open

Figure 1
Top View

1. PC Camera
2. PC Camera LED
3. Built-In Microphone
4. LCD
5. Speakers
6. Power Button
7. LED Lock Indicators
8. Keyboard
9. TouchPad and Buttons
10. Fingerprint Reader

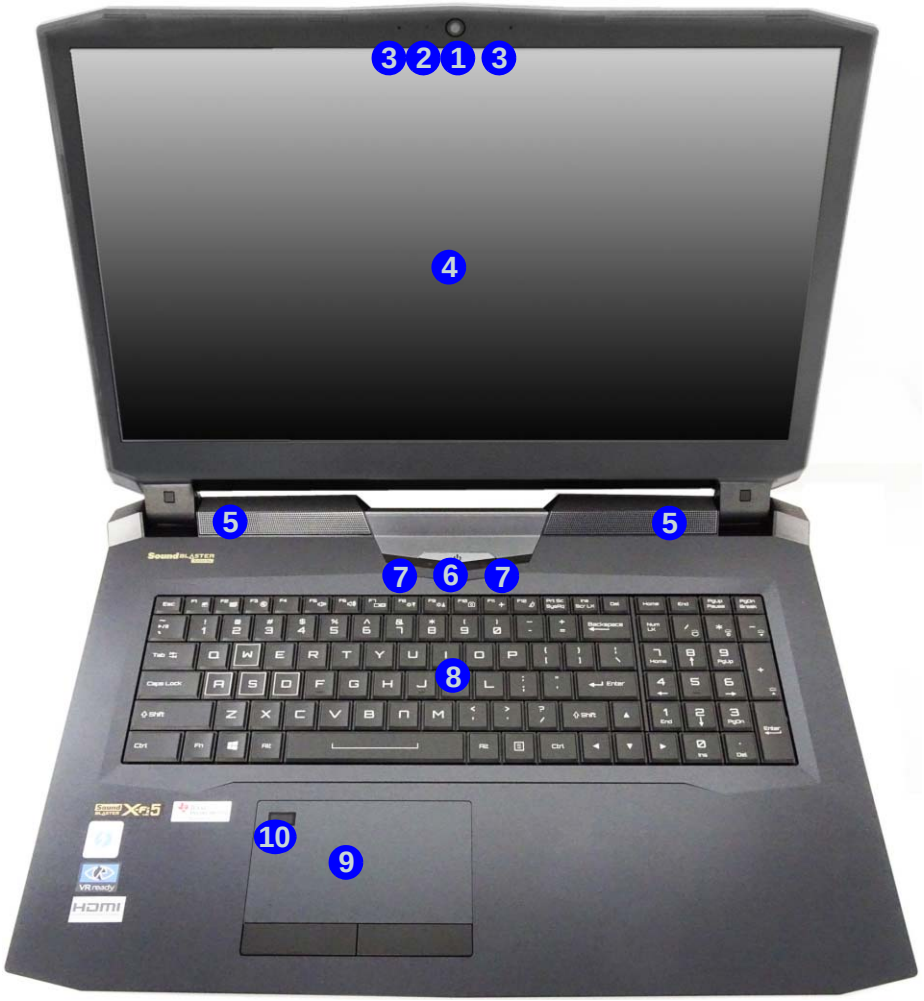

External Locator - Front & Right side Views

Figure 2
Front Views

1. LED Power Indicators

Figure 3
Right Side Views

1. Line-In Jack
2. Microphone Jack
3. Line-Out Jack
4. Headphone and S/PDIF Combo Jack
5. USB 3.0/3.1 Port
6. Security Lock Slot

External Locator - Left Side & Rear View

Figure 4
Left Side View

1. RJ-45 LAN Jack
2. USB 3.1/ Thunderbolt Combo Port
3. USB 3.1 Port
4. USB 3.0/3.1 Port
5. Powered USB 3.1 Port
6. Multi-in-1 Card Reader

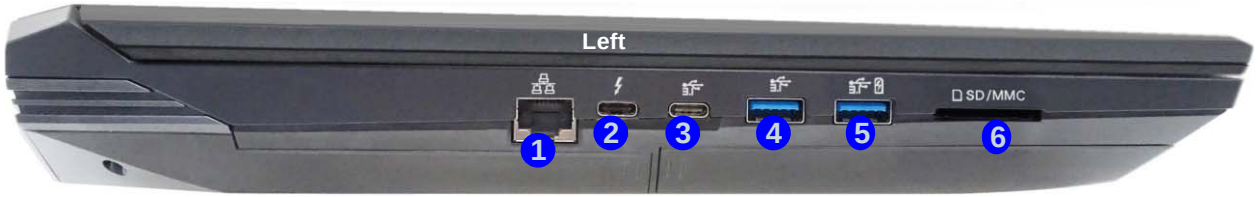

Figure 5
Rear View

1. Vent/Fan Intake
2. HDMI-Out Port
3. Mini Display Port 1
4. Mini Display Port 2
5. DC-In Jack

External Locator - Bottom View

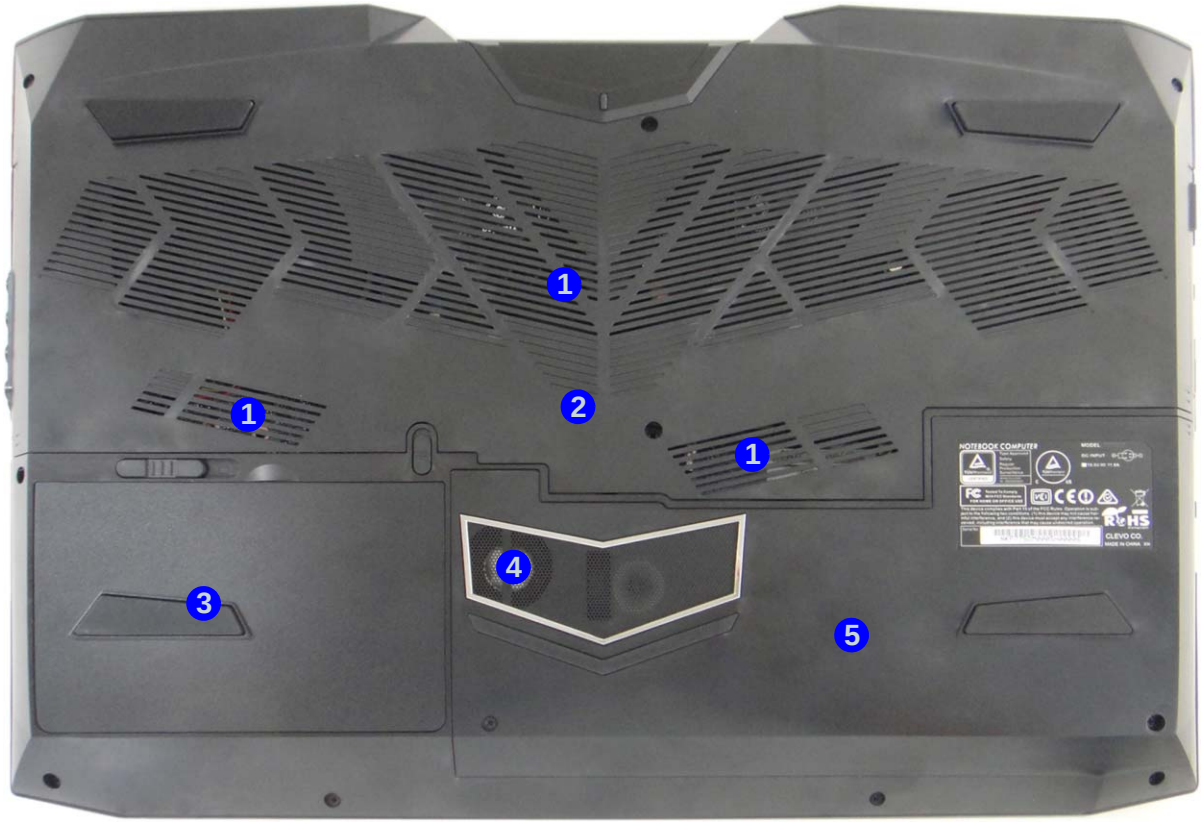

Figure 6
Bottom View

1. Vent
2. Component Bay Cover
3. Battery
4. Sub Woofer
5. HDD Bay

Overheating

To prevent your computer from overheating make sure nothing blocks the vent/fan intakes while the computer is in use.

Mainboard Overview - Top (Key Parts)

Figure 7
Mainboard Top Key Parts

1. Memory Slots DDR4 SO-DIMM
2. Platform Controller Hub

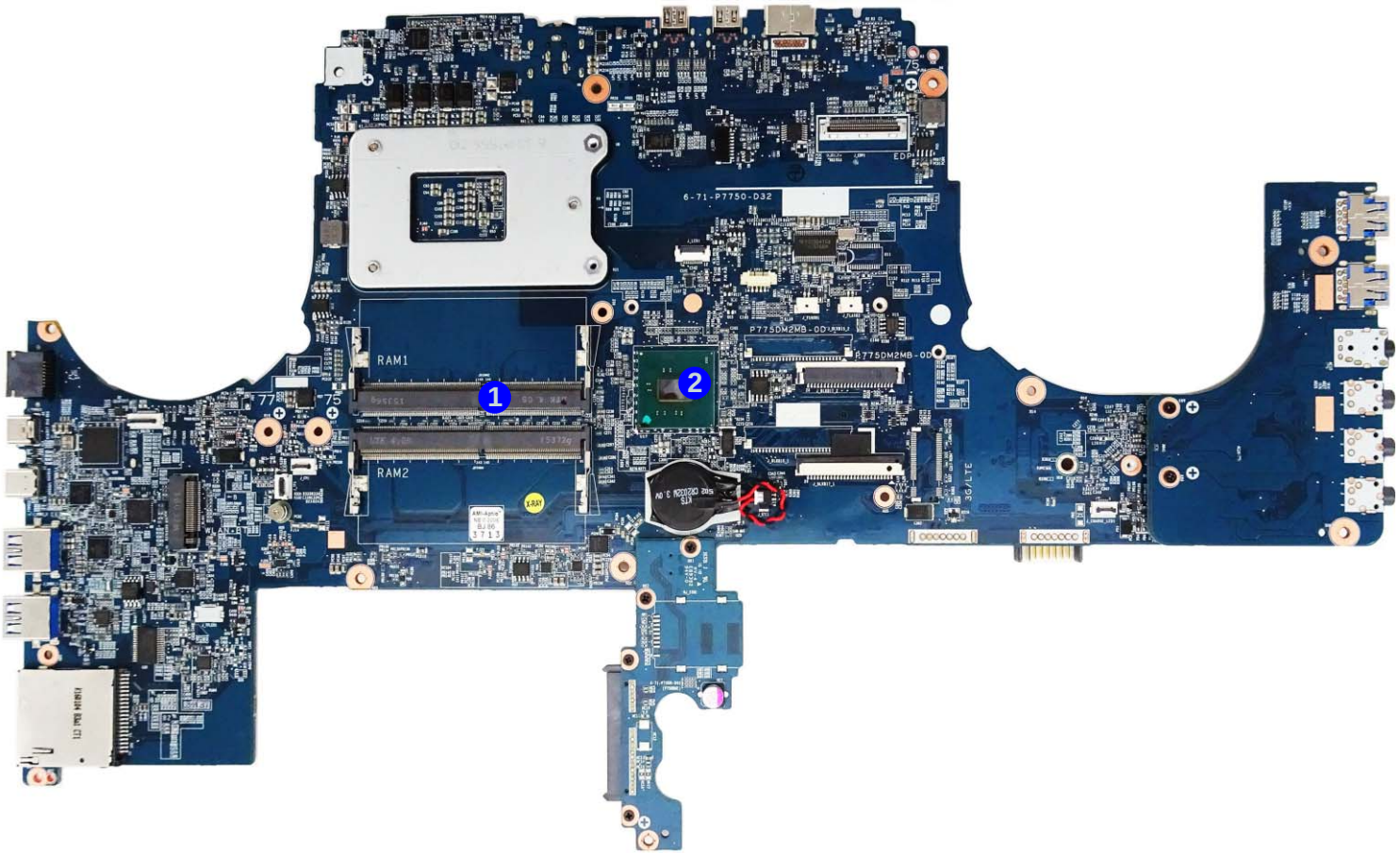

Mainboard Overview - Bottom (Key Parts)

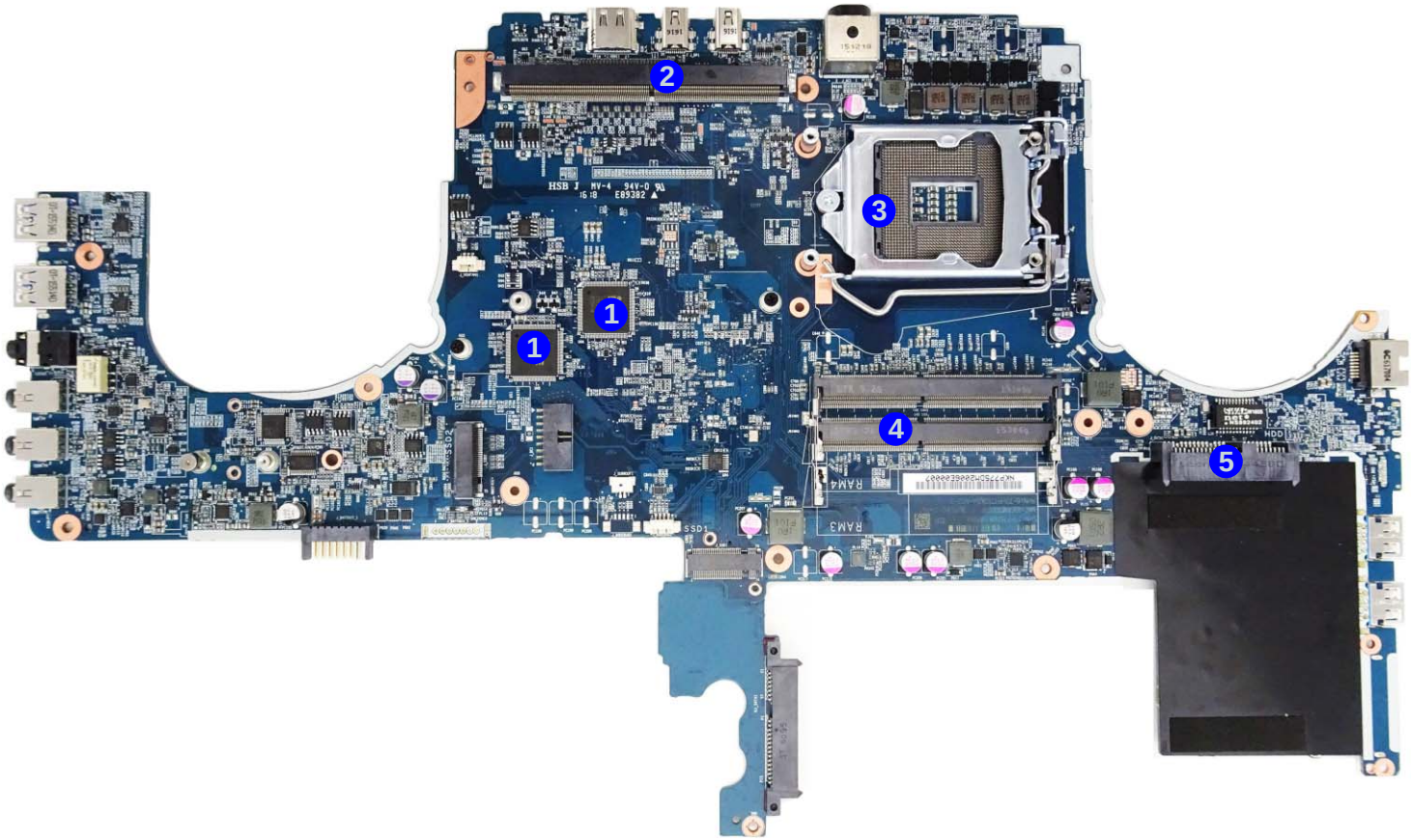

Figure 8
Mainboard Bottom Key Parts

1. KBC ITE IT8587
2. VGA-Card Connector
3. CPU Socket (no CPU installed)
4. Memory Slots DDR4 SO-DIMM (Primary)
5. Hard Disk Connector

Mainboard Overview - Top (Connectors)

Figure 9
Mainboard Top Connectors

1. RJ-45 LAN Jack
2. USB 3.1/ Thunderbolt Combo Port
3. USB 3.1 Port
4. USB 3.0/3.1 Port
5. Multi-in-1 Card Reader
6. KB LED Connector
7. WLAN Card Connector
8. Fingerprint Connector
9. TP FFC Cable Connector
10. Panel Cable Connector
11. Keyboard Cable Connector
12. Battery Connector
13. Line-In Jack
14. Microphone Jack
15. Line-Out Jack
16. Headphone and S/PDIF Combo Jack

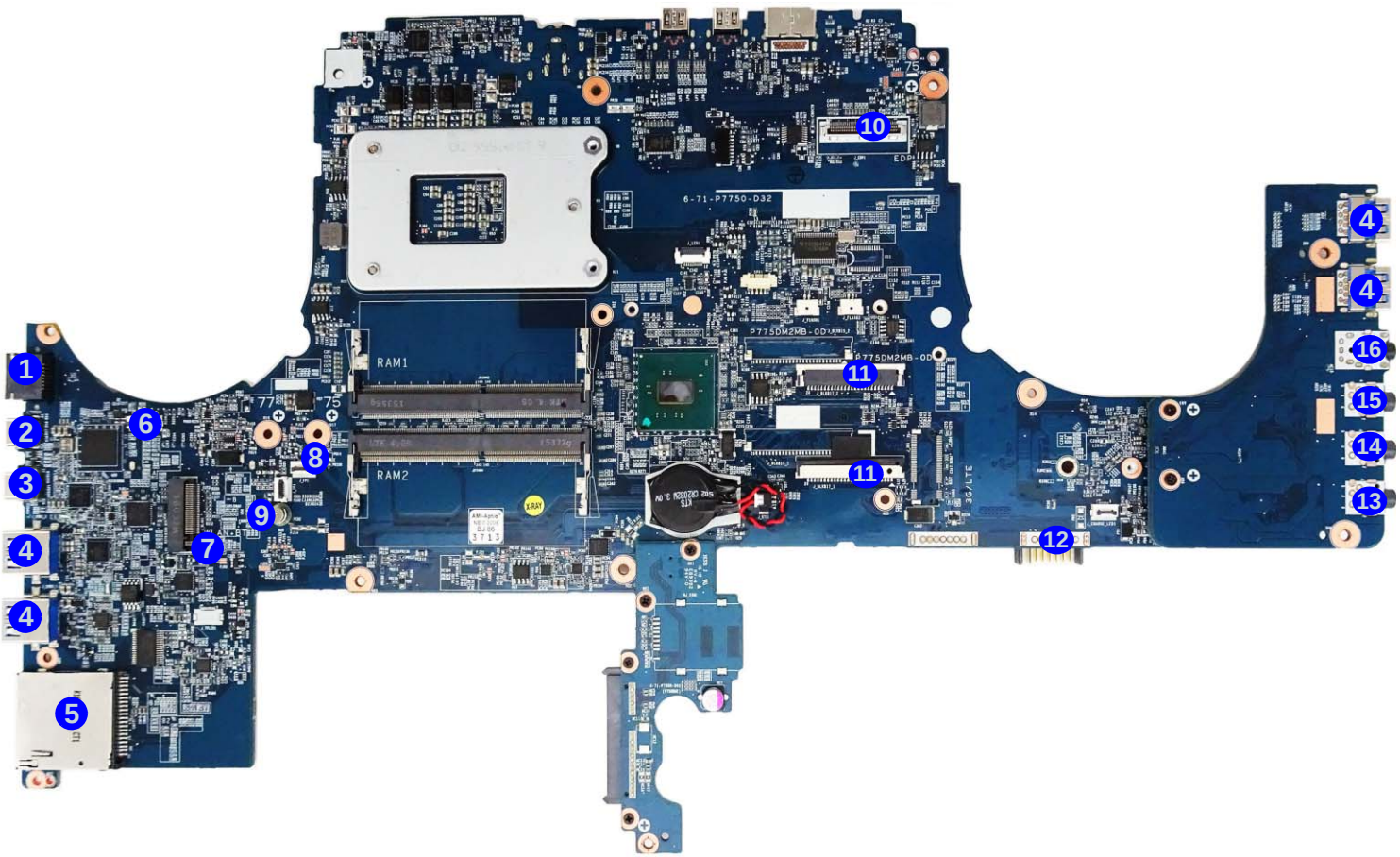

Mainboard Overview - Bottom (Connectors)

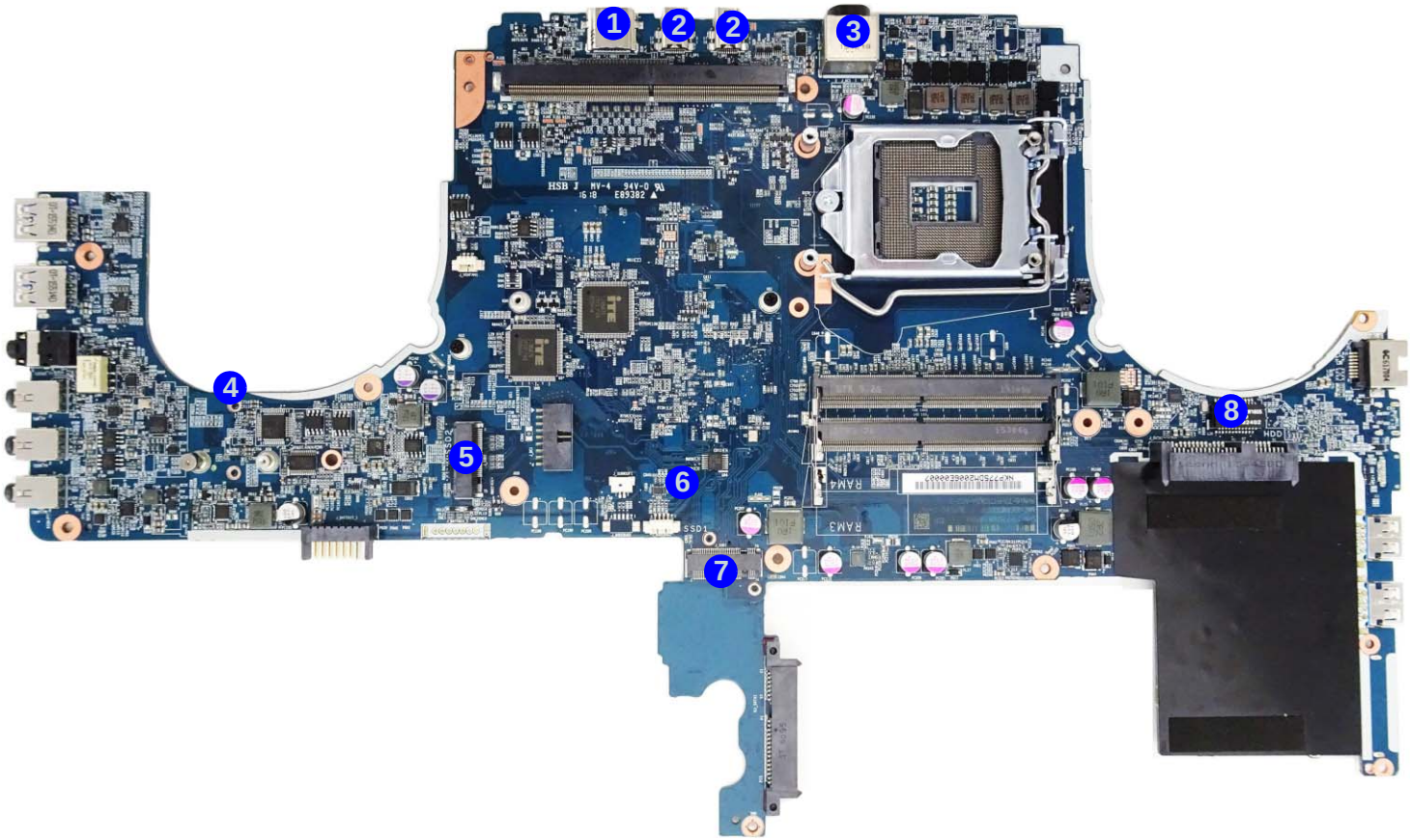

Figure 10
Mainboard Bottom Connectors

1. HDMI-Out Port
2. Display Port
3. DC-In Jack
4. VGA Fan Cable Connector
5. 3G / SSD Connector
6. CMOS Battery
7. SSD Connector
8. CPU Fan Cable Connector

Chapter 2: Disassembly

Overview

This chapter provides step-by-step instructions for disassembling the ***P775TM (-G) / P775TM1 (-G)*** series notebook's parts and subsystems. When it comes to reassembly, reverse the procedures (unless otherwise indicated).

We suggest you completely review any procedure before you take the computer apart.

Procedures such as upgrading/replacing the RAM, optical device and hard disk are included in the User's Manual but are repeated here for your convenience.

To make the disassembly process easier each section may have a box in the page margin. Information contained under the figure # will give a synopsis of the sequence of procedures involved in the disassembly procedure. A box with a lists the relevant parts you will have after the disassembly process is complete. **Note**: The parts listed will be for the disassembly procedure listed ONLY, and not any previous disassembly step(s) required. Refer to the part list for the previous disassembly procedure. The amount of screws you should be left with will be listed here also.

A box with a will also provide any possible helpful information. A box with a contains warnings.

An example of these types of boxes are shown in the sidebar.

Information

Warning

NOTE: All disassembly procedures assume that the system is turned **OFF**, and disconnected from any power supply (the battery is removed too).

Maintenance Tools

The following tools are recommended when working on the notebook PC:

- M3 Philips-head screwdriver
- M2.5 Philips-head screwdriver (magnetized)
- M2 Philips-head screwdriver
- Small flat-head screwdriver
- Pair of needle-nose pliers
- Anti-static wrist-strap

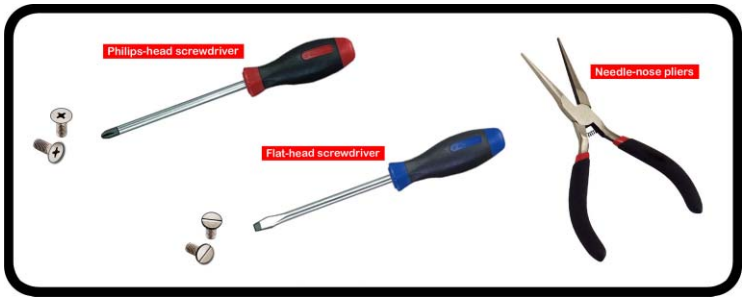

Connections

Connections within the computer are one of four types:

Locking collar sockets for ribbon connectors	To release these connectors, use a small flat-head screwdriver to gently pry the locking collar away from its base. When replacing the connection, make sure the connector is oriented in the same way. The pin1 side is usually not indicated.
Pressure sockets for multi-wire connectors	To release this connector type, grasp it at its head and gently rock it from side to side as you pull it out. Do not pull on the wires themselves. When replacing the connection, do not try to force it. The socket only fits one way.
Pressure sockets for ribbon connectors	To release these connectors, use a small pair of needle-nose pliers to gently lift the connector away from its socket. When replacing the connection, make sure the connector is oriented in the same way. The pin1 side is usually not indicated.
Board-to-board or multi-pin sockets	To separate the boards, gently rock them from side to side as you pull them apart. If the connection is very tight, use a small flat-head screwdriver - use just enough force to start.

Maintenance Precautions

The following precautions are a reminder. To avoid personal injury or damage to the computer while performing a removal and/or replacement job, take the following precautions:

1. **Don't drop it**. Perform your repairs and/or upgrades on a stable surface. If the computer falls, the case and other components could be damaged.
2. **Don't overheat it**. Note the proximity of any heating elements. Keep the computer out of direct sunlight.
3. **Avoid interference**. Note the proximity of any high capacity transformers, electric motors, and other strong magnetic fields. These can hinder proper performance and damage components and/or data. You should also monitor the position of magnetized tools (i.e. screwdrivers).
4. **Keep it dry**. This is an electrical appliance. If water or any other liquid gets into it, the computer could be badly damaged.
5. **Be careful with power**. Avoid accidental shocks, discharges or explosions.
   •Before removing or servicing any part from the computer, turn the computer off and detach any power supplies.
   •When you want to unplug the power cord or any cable/wire, be sure to disconnect it by the plug head. Do not pull on the wire.
6. **Peripherals** – Turn off and detach any peripherals.
7. **Beware of static discharge**. ICs, such as the CPU and main support chips, are vulnerable to static electricity. Before handling any part in the computer, discharge any static electricity inside the computer. When handling a printed circuit board, do not use gloves or other materials which allow static electricity buildup. We suggest that you use an anti-static wrist strap instead.
8. **Beware of corrosion**. As you perform your job, avoid touching any connector leads. Even the cleanest hands produce oils which can attract corrosive elements.
9. **Keep your work environment clean**. Tobacco smoke, dust or other air-born particulate matter is often attracted to charged surfaces, reducing performance.
10. **Keep track of the components**. When removing or replacing any part, be careful not to leave small parts, such as screws, loose inside the computer.

Power Safety Warning

Before you undertake any upgrade procedures, make sure that you have turned off the power, and disconnected all peripherals and cables (including telephone lines and power cord). It is advisable to also remove your battery in order to prevent accidentally turning the machine on.

Cleaning

Do not apply cleaner directly to the computer, use a soft clean cloth.
Do not use volatile (petroleum distillates) or abrasive cleaners on any part of the computer.
(For Computer Models Supplied with Light Blue Cleaning Cloth) Some computer models in this series come supplied with a light blue cleaning cloth. To clean the computer case with this cloth follow the instructions below.

- Power off the computer and peripherals.
- Disconnect the AC/DC adapter from the computer.
- Use a little water to dampen the cloth slightly.
- Clean the computer case with the cloth.
- Dry the computer with a dry cloth, or allow it time to dry before turning on.
- Reconnect the AC/DC adapter and turn the computer on.

Disassembly Steps

The following table lists the disassembly steps, and on which page to find the related information. **PLEASE PERFORM THE DISASSEMBLY STEPS IN THE ORDER INDICATED.**

To remove the Battery:

1. Remove the battery *page 2 - 5*

To remove the HDD:

1. Remove the battery *page 2 - 5*
2. Remove the HDD *page 2 - 6*

To remove the M.2 SSD:

1. Remove the battery *page 2 - 5*
2. Remove the HDD *page 2 - 6*
3. Remove the M.2 SSD *page 2 - 9*

To remove the Primary System Memory:

1. Remove the battery *page 2 - 5*
2. Remove the primary system memory *page 2 - 10*

To remove and install the Processor:

1. Remove the battery *page 2 - 5*
2. Remove the system memory *page 2 - 10*
3. Remove the processor *page 2 - 12*
4. Install the processor *page 2 - 14*

To remove the System Memory under the Keyboard:

1. Remove the battery *page 2 - 5*
2. Remove the processor *page 2 - 12*
3. Remove the keyboard *page 2 - 15*
4. Remove the system memory *page 2 - 16*

To remove the WLAN Module:

1. Remove the battery *page 2 - 5*
2. Remove the processor *page 2 - 12*
3. Remove the keyboard *page 2 - 10*
4. Remove the wireless LAN *page 2 - 17*

To remove the WiGig Module:

1. Remove the battery *page 2 - 5*
2. Remove the processor *page 2 - 12*
3. Remove the keyboard *page 2 - 10*
4. Remove the WiGig *page 2 - 19*

To remove and install the M.2 SSD:

1. Remove the battery *page 2 - 5*
2. Remove the primary system memory *page 2 - 10*
3. Remove the M.2 SATA *page 2 - 20*
4. Install the M.2 SATA *page 2 - 21*

To remove and install the Video Card:

1. Remove the battery *page 2 - 5*
2. Remove the video card *page 2 - 22*
3. Install the video card *page 2 - 23*

Removing the Battery

1. Turn the computer **off**, and turn it over.
2. Slide the latch 1 in the direction of the arrow (***Figure 1a***).
3. Slide the latch 2 in the direction of the arrow, and hold it in place (***Figure 1a***).
4. Lift the battery in the direction of the arrow 3.
5. Lift the battery 4 out of the compartment (***Figure 1c***).

Figure 1
Battery Removal

a. Slide the latch and hold in place.
b. Lift the battery up toward the direction of the arrow.
c. Lift the battery out.

a.

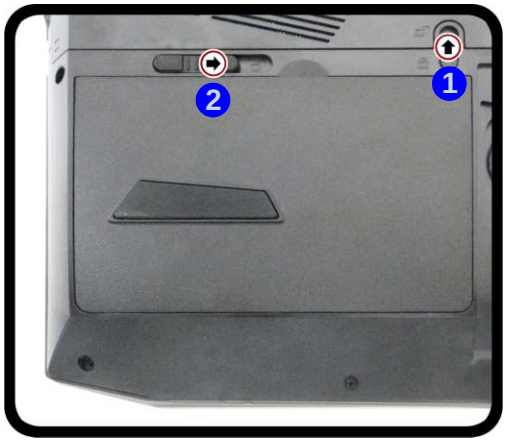

b.

c.

4. Battery

Figure 2
HDD Assembly Removal

a. Locate the HDD bay cover and remove the screws.
b. Remove the hard disk bay cover by sliding the cover at point 3.

Removing and Installing the Hard Disk Drive

The hard disk drive can be taken out to accommodate other 2.5" serial (SATA) hard disk drives with a height of 7mm/ 9.5mm (h). Follow your operating system's installation instructions, and install all necessary drivers and utilities (as outlined in **Chapter 4 of the User's Manual**) when setting up a new hard disk.

Hard Disk Removal Process

1. Turn **off** the computer, and remove the battery (*page 2 - 5*).
2. Locate the hard disk bay cover and remove screws 1 - 2 (*Figure 2a*).
3. Remove the hard disk bay cover by sliding the cover at point 3 (*Figure 2b*).

a.

b.

- 2 Screws

HDD System Warning

New HDD's are blank. Before you begin make sure:

You have backed up any data you want to keep from your old HDD.

You have all the CD-ROMs and FDDs required to install your operating system and programs.

If you have access to the internet, download the latest application and hardware driver updates for the operating system you plan to install. Copy these to a removable medium.

4. Lift the hard disk bay cover 4 off the computer (*Figure 3c*)
5. Remove the screw 5. Slightly lift and pull the HDD-1 assembly in the direction of the arrow 6 to remove the hard disk assembly 7 (*Figure 3d*).
6. Remove the screw 8. Slightly lift and pull the HDD-2 assembly (if available) in the direction of the arrow 9 to remove the hard disk assembly 10 (*Figure 3e*).
7. Remove screws 11 - 16, HDD bracket 17 and the adhesive cover 18 from the hard disk 19 (*Figure 3f*).
8. Reverse the process to install a new hard disk (do not forget to replace all the screws and covers).

Figure 3
HDD Assembly Removal (cont'd.)

c. Remove the HDD bay cover.
d. Remove the screw. Lift and pull the HDD-1 assembly in the direction of the arrow to remove the hard disk assembly.
e. Remove the screw. Lift and pull the HDD-2 assembly in the direction of the arrow to remove the hard disk assembly.
f. Remove the screws, hdd bracket and adhesive cover.

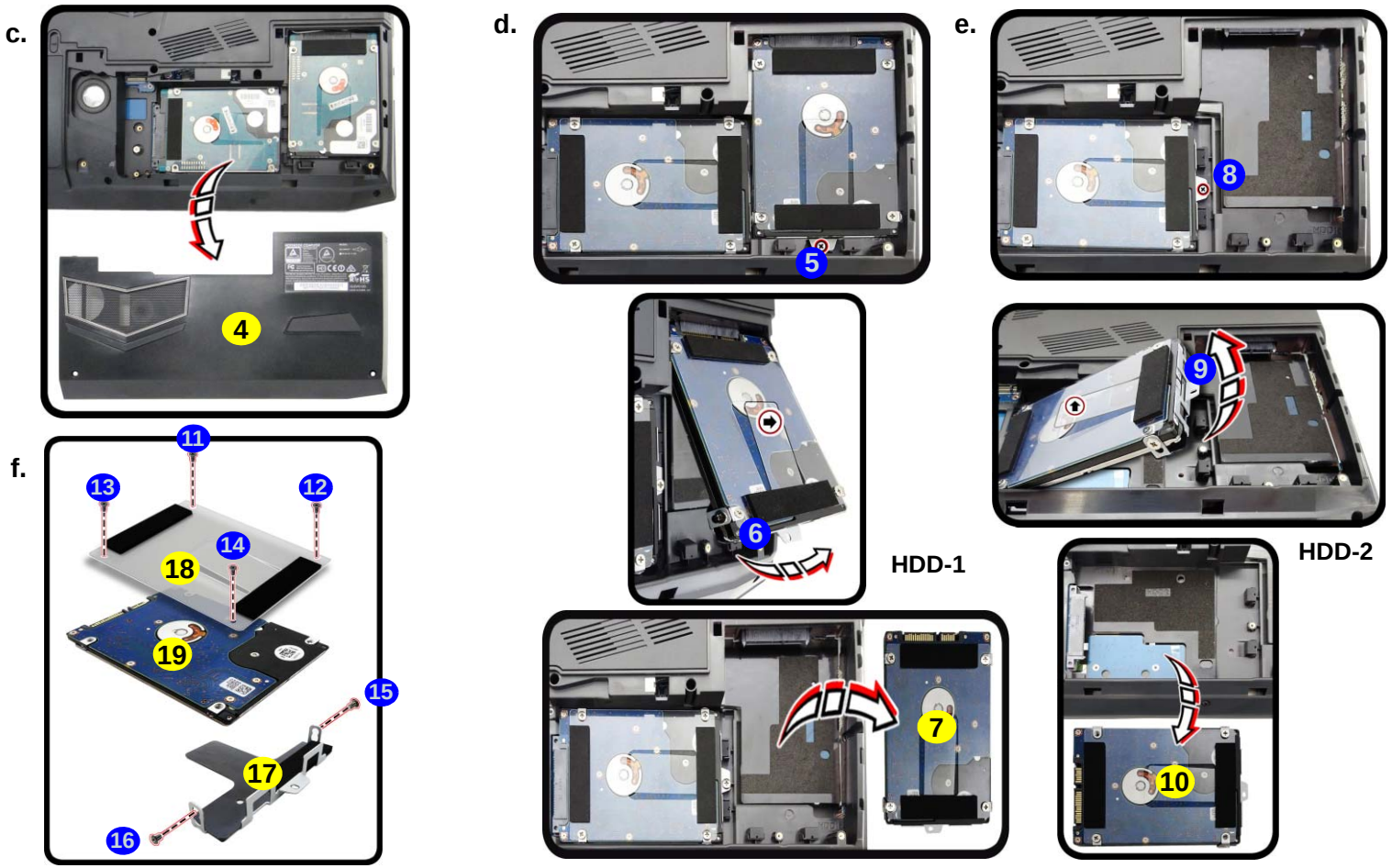

4. HDD Bay Cover
7. HDD-1 Assembly
10. HDD-2 Assembly
17. Adhesive Cover
18. HDD Bracket
19. HDD

- 8 Screws

Hard Disk Size Note (Foam Rubber Insert)

Note that the hard disks pictured on the following pages are all 9.5mm(H) hard disk drives. In some cases 7mm(H) hard disk drives will be installed.

Figure 4
Foam Rubber Insert for 7mm(H) HDDs

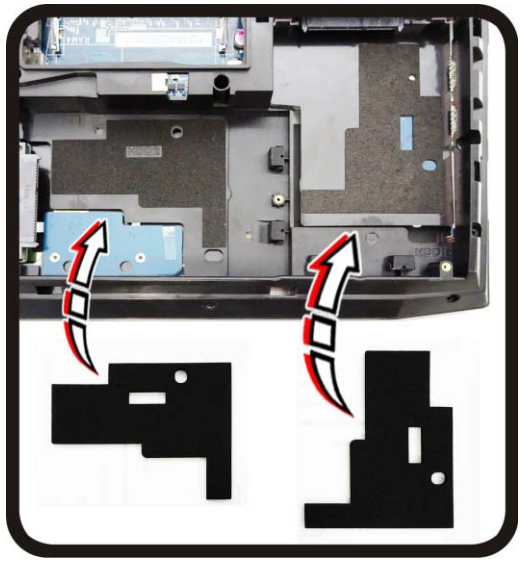

HDD-2 **HDD-1**

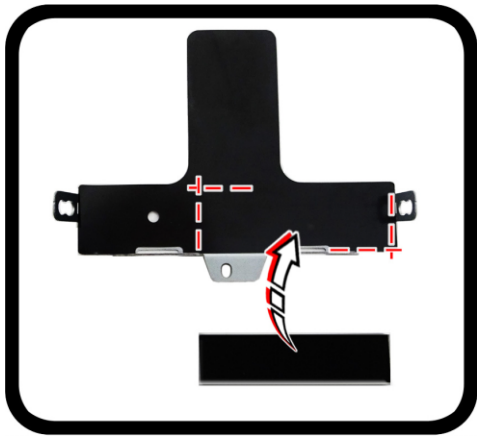

- If you are replacing a 9.5mm(H) HDD with a 7mm(H) HDD then insert the foam rubber insert.
- If you are replacing a 7mm(H) HDD with a 9.5mm(H) HDD then remove the foam rubber insert.

Removing the M.2 SSD Module

Note that the **SSD** (if installed) is beside the HDD bay.

1. Turn **off** the computer, and turn it over, remove the battery (***page 2 - 5***).
2. Remove the screw 1 from the SSD (***Figure 5a***).
3. The M.2 SSD module 2 will pop-up (***Figure 5b***).
4. Lift the M.2 SSD module 2 up and off the computer (***Figure 5c***).
5. Reverse the process to install a new SSD (make sure that the hexagonal screw 3 is in the correct location depending upon the size of the module).

Figure 5
M.2 SSD Module Removal

a. Remove the screws.
b. The module will pop up.
c. Lift the module out.

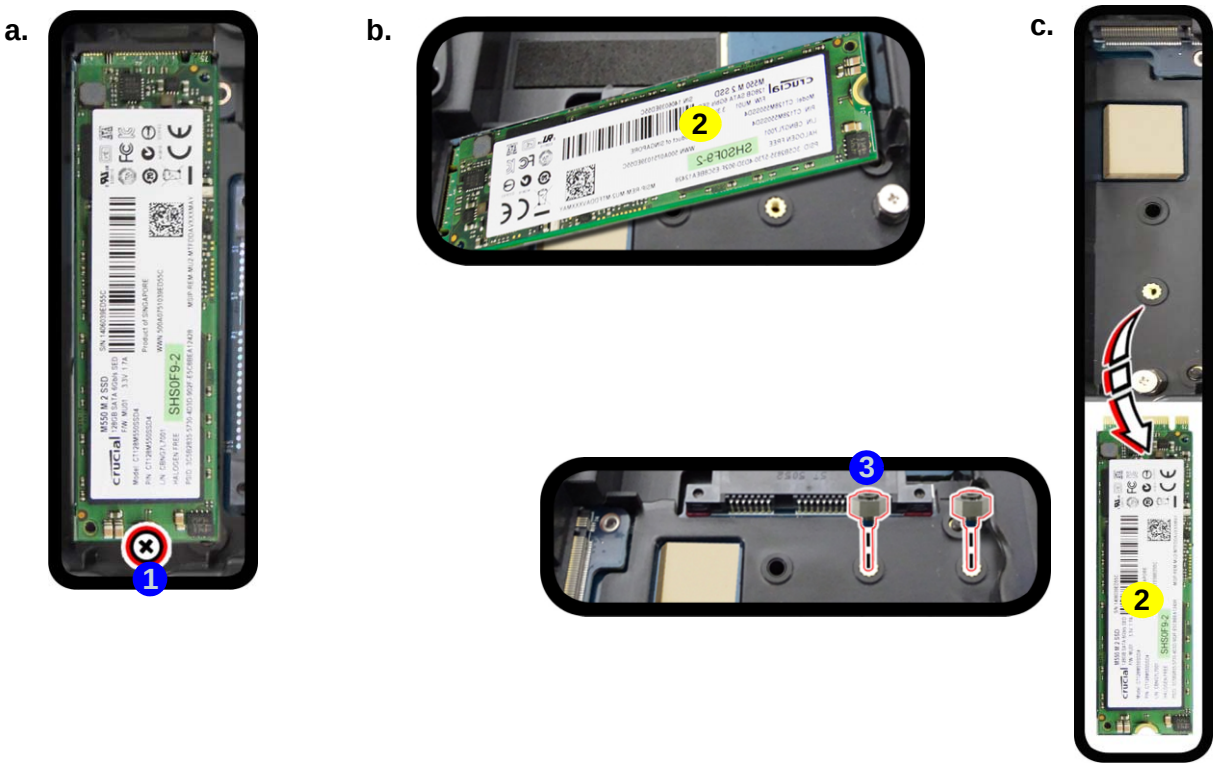

2. M.2 SSD Module

- 1 Screw

Figure 6
RAM Module Removal

a. Remove the screws. Slide the bottom cover until the cover and case indicators are aligned.

Removing the Primary System Memory (RAM)

The computer has **four** memory sockets for 260 pin Small Outline Dual In-line (SO-DIMM) **DDR 4** type memory modules. The total memory size is automatically detected by the POST routine once you turn on your computer.

Two primary memory sockets are located under component bay cover (the bottom case cover), and two secondary memory sockets are located under the keyboard (not user upgradable). If you are installing only two RAM modules then they should be installed in the primary memory sockets under the component bay cover.

Note that the RAM located under the keyboard is not user upgradable.

Memory Upgrade Process

1. Turn **off** the computer, and turn it over, remove the battery (***page 2 - 5***).
2. Remove screws 1 - 5.
3. Slide the bottom cover until the cover and case indicators 6 are aligned (***Figure 6a***).

a.

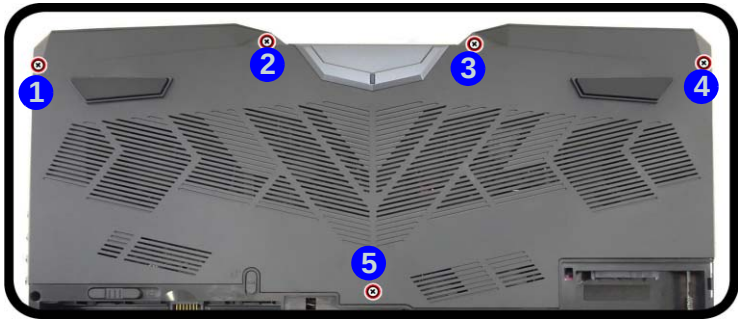

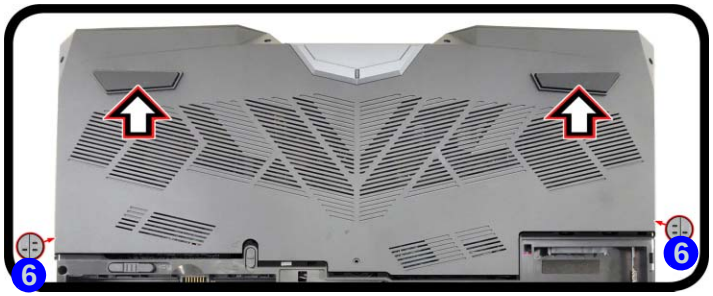

- 5 Screws

4. Lift the component bay cover 6 off the computer case. The modules will be visible at point 7 (*Figure 7c*).
5. Gently pull the two release latches (8 & 9) on the sides of the memory socket(s) in the direction indicated below (*Figure 7d*).
6. The RAM module 10 will pop-up, and you can remove it (*Figure 7e*).
7. Pull the latches to release the second module if necessary.
8. Insert a new module holding it at about a 30° angle and fit the connectors firmly into the memory slot.
9. The module's pin alignment will allow it to only fit one way. Make sure the module is seated as far into the slot as it will go. DO NOT FORCE the module; it should fit without much pressure.
10. Press the module in and down towards the mainboard until the slot levers click into place to secure the module.
11. Replace the bay cover and screws.
12. Restart the computer to allow the BIOS to register the new memory configuration as it starts up.

Figure 7
RAM Module Removal (cont'd.)

c. Lift the component bay cover off the computer case. The modules will be visible at point 7.
d. Gently pull the two release latches on the sides of the memory socket(s) in the direction indicated below.
e. The RAM module will pop-up, and you can remove it.

c.

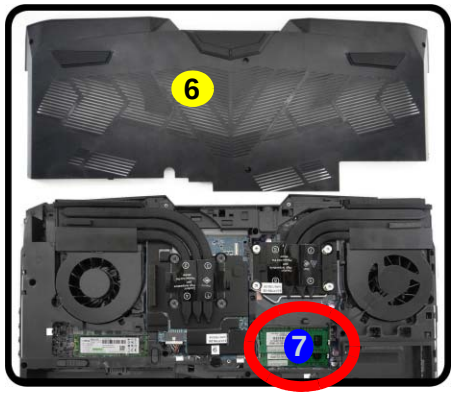

e.

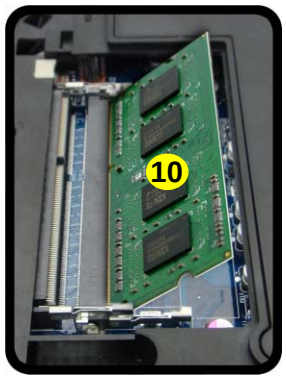

d.

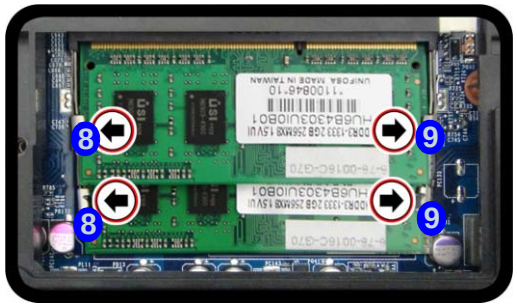

Contact Warning

Be careful not to touch the metal pins on the module's connecting edge. Even the cleanest hands have oils which can attract particles, and degrade the module's performance.

6. Component Bay Cover
10. RAM Module

- 4 Screws

Figure 8
Processor Removal Procedure

a. Remove the screws in the correct order.
b. Carefully remove the heat sink unit.

Removing and Installing the Processor

Processor Removal Procedure

1. Turn **off** the computer, remove the battery (***page 2 - 5***), and component bay cover (***page 2 - 10***).
2. Remove screws 1 - 4 from the heat sink unit in the order indicated on the label (i.e screw 4 first through to screw 1 last ***Figure 8a***).
3. Carefully (it may be hot) remove the heat sink unit 5 (***Figure 8b***).

a.

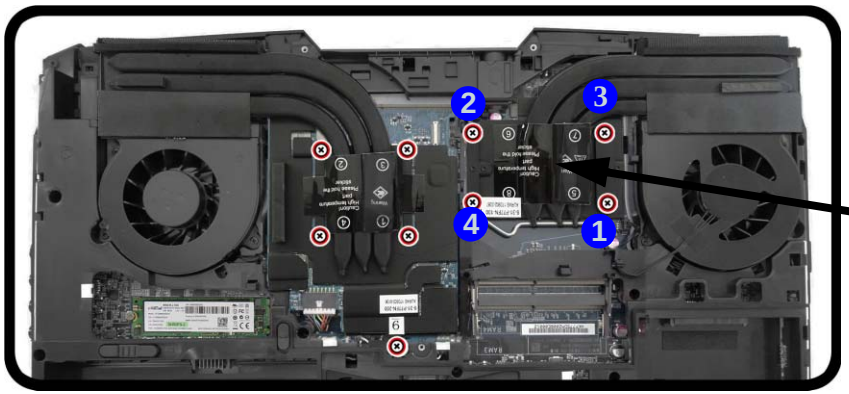

Note:
Loosen the screws in the reverse order 4-3-2-1 as indicated.

b.

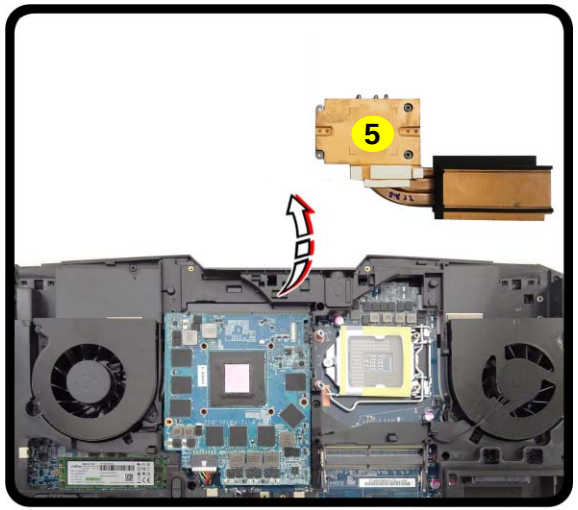

5. Heat Sink Unit

- 4 Screws

4. Press down and hold the latch 11 (with the latch held down you will be able to release it).
5. Move the latch 11 and bracket 12 fully in the direction indicated to unlock the CPU(*Figure 9c*).
6. Carefully (it may be hot) lift the CPU A up out of the socket (*Figure 9d*).
7. See *page 2 - 14* for information on inserting a new CPU.
8. When re-inserting the CPU, pay careful attention to the pin alignment, it will fit only one way (DO NOT FORCE IT!).

Figure 9
Processor Removal (cont'd)

c. Move the latch and bracket fully in the direction indicated to unlock the CPU.
d. Lift the CPU out of the socket.

c.

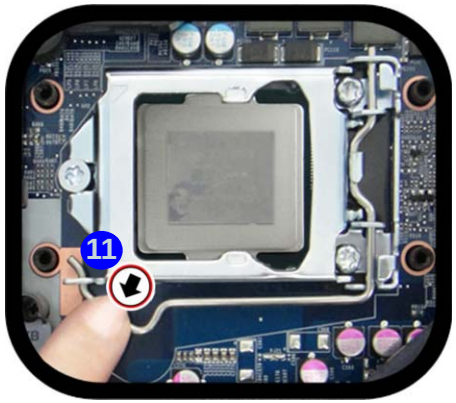

Unlock

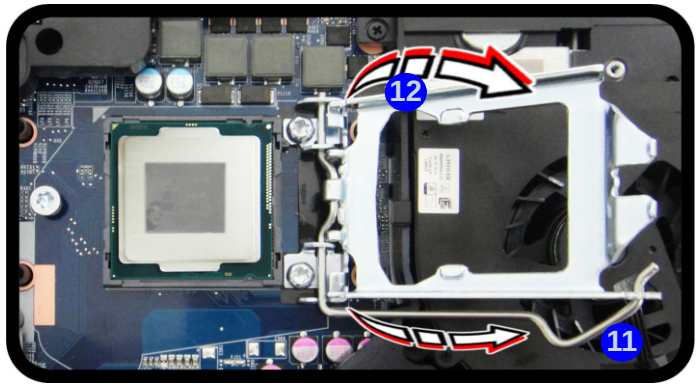

d.

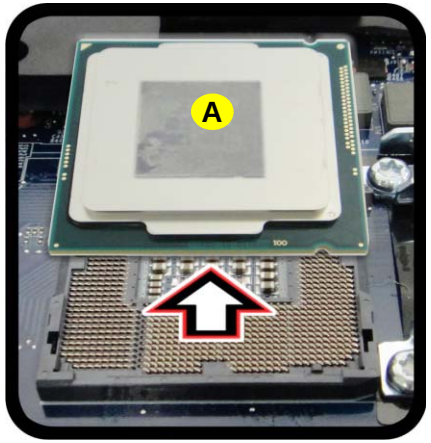

Caution

The heat sink, and CPU area in general, contains parts which are subject to high temperatures. Allow the area time to cool before removing these parts.

A. CPU

Figure 10
Processor Installation

a. Insert the CPU.
b. Move the latch and bracket fully in the direction indicated to lock the CPU. Apply thermal grease.
c. Remove the sticker from the heat sink unit and insert the heat sink.
d. Tighten the screws.

Processor Installation Procedure

1. Insert the CPU A; pay careful attention to the pin alignment (***Figure 10a***), it will fit only one way (DO NOT FORCE IT!).
2. Move the bracket B and latch C fully in the direction indicated to lock the CPU.
3. Apply the whole tube of thermal grease D to the top of the CPU as shown (***Figure 10b***).
4. **Remove the sticker** E (***Figure 10c***) from the heat sink unit (if it is a new unit).
5. Insert the heat sink unit F as indicated in ***Figure 10c***.
6. Tighten the CPU heat sink screws in the order 1 - 4 (the order as indicated on the label and ***Figure 10d***).
7. Replace the CPU fan, component bay cover and tighten the screws (***page 2 - 12***).

a.

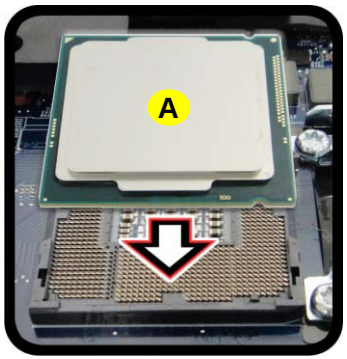

b.

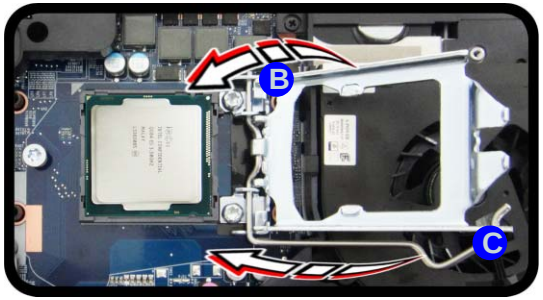

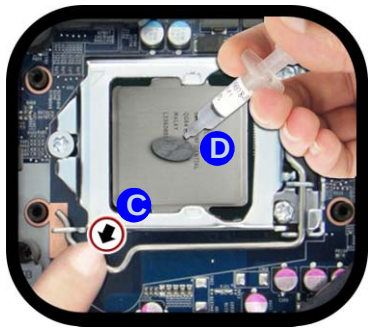

c.

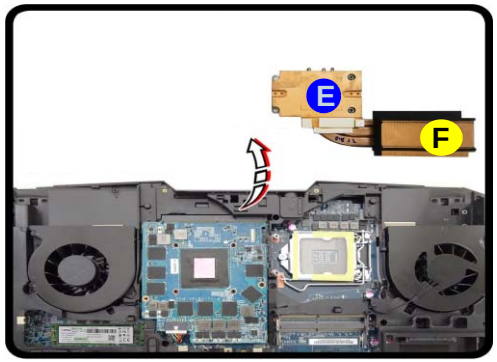

Note:
Tighten the screws in the order 1-2-3-4 as indicated.

d.

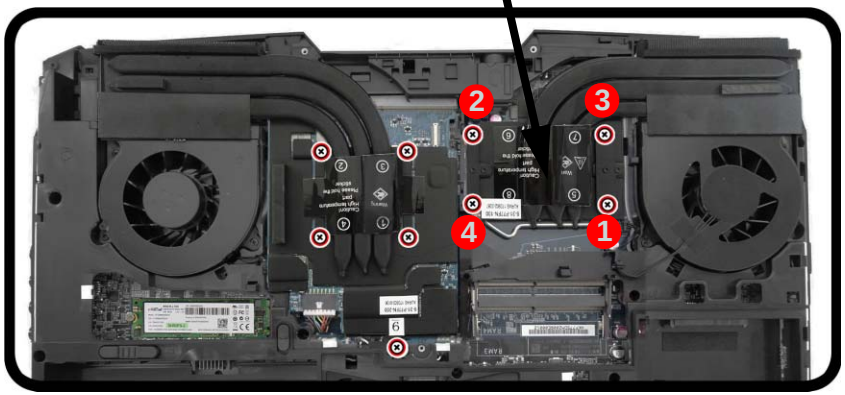

A. CPU
F. Heat Sink

- 4 Screws

Removing the System Memory (RAM) from Under the Keyboard

The computer has **four** memory sockets for 260 pin Small Outline Dual In-line (SO-DIMM) **DDR 4** type memory modules. The total memory size is automatically detected by the POST routine once you turn on your computer.

Two primary memory sockets are located under component bay cover (the bottom case cover), and two secondary memory sockets are located under the keyboard. If you are installing only two RAM modules then they should be installed in the primary memory sockets under the component bay cover.

Memory Upgrade Process

1. Turn **off** the computer, and turn it over, remove the battery (*page 2 - 5*) .
2. Remove screws 1 - 5 and the component bay cover 6 (*Figure 11a*) and CPU heatsink (*page 2 - 12*).
3. Remove screws 7 - 8 from the bottom of the computer (*Figure 11b*).
4. Open it up with the LCD on a flat surface before pressing at point 9 to release the keyboard module (use an eject stick 10 to do this with a diameter no bigger than 2.5mm) while releasing the keyboard in the direction of the arrow 11 as shown (*Figure 11c*).

Figure 11
Keyboard Removal

a. Remove the screws and component bay cover.
b. Remove the screws.
c. Eject the keyboard using a special eject stick to push the keyboard out while releasing the keyboard as shown.

a.

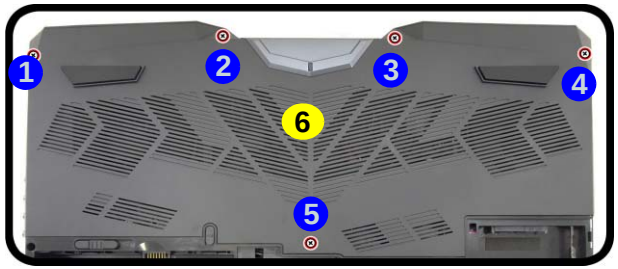

b.

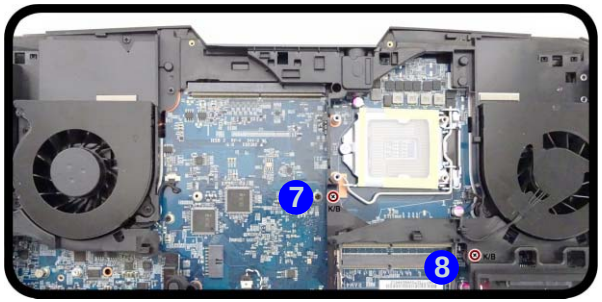

c.

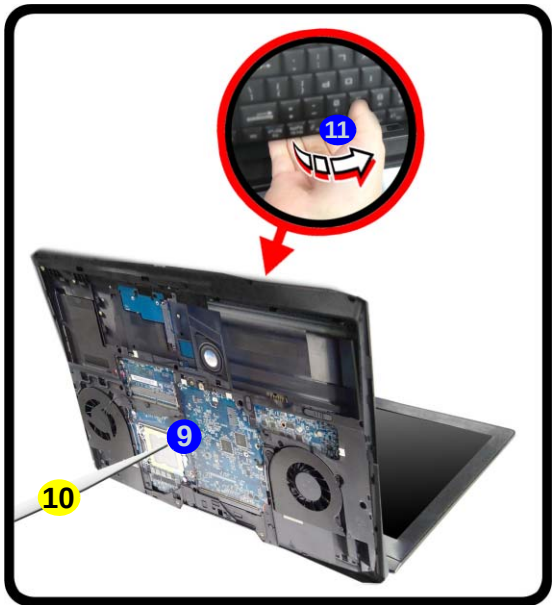

6. Top Cover Module
10. Eject Stick

- 7 Screws

Figure 12
RAM Module Removal

d. Lift the keyboard up, and disconnect the keyboard ribbon cable from the locking collar socket.
e. Remove the keyboard and the memory sockets will be visible.
f. Pull the two release latches on the sides of the memory socket(s) in the direction indicated.

5. Carefully lift the keyboard 12 up, being careful not to bend the keyboard ribbon cables 13 - 15.
6. Disconnect the keyboard ribbon cables 13 - 15 from the locking collar socket 16 by using a small flat-head screw-driver to pry the locking collar pins 17 away from the base (***Figure 12d***).
7. Remove the keyboard and the memory sockets 18 & 19 will be visible.
8. Gently pull the two release latches (20 & 21) on the sides of the memory socket(s) in the direction indicated below.
9. The RAM module 22 will pop-up, and you can remove it.
10. Pull the latches to release the second module if necessary.
11. Insert a new module holding it at about a 30° angle and fit the connectors firmly into the memory slot.
12. The module's pin alignment will allow it to only fit one way. Make sure the module is seated as far into the slot as it will go. DO NOT FORCE the module; it should fit without much pressure.
13. Press the module in and down towards the mainboard until the slot levers click into place to secure the module.
14. Replace the bay cover and screws.
15. Restart the computer to allow the BIOS to register the new memory configuration as it starts up.

d.

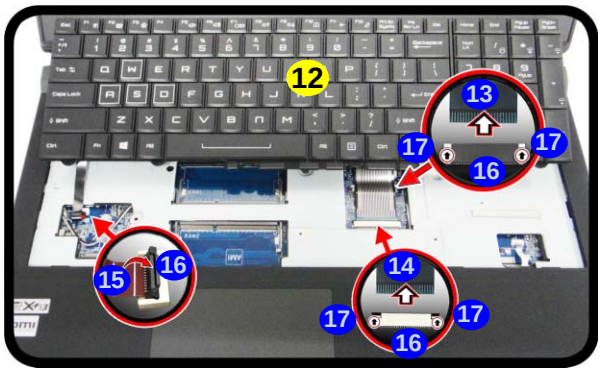

f.

e.

12. Keyboard
22. RAM Modules

Contact Warning

Be careful not to touch the metal pins on the module's connecting edge. Even the cleanest hands have oils which can attract particles, and degrade the module's performance.

Removing the Wireless LAN Module

1. Turn **off** the computer, remove the battery (***page 2 - 5***), CPU (***page 2 - 12***) and the keyboard (***page 2 - 15***).
2. The Wireless LAN module will be visible at point 1 under the keyboard (***Figure 13a***).
3. Carefully disconnect cables 2 - 3, then remove screw 4 from the module socket (***Figure 13b***).
4. The Wireless LAN module 5 will pop-up (***Figure 13c***).
5. Lift the Wireless LAN module (***Figure 13d***) up and off the computer.

Figure 13
Wireless LAN Module Removal

a. The Wireless LAN module will be visible at point 1 under the keyboard
b. Disconnect the cables and remove the screw.
c. The WLAN module will pop up.
d. Lift the WLAN module out.

a.

b.

c.

d.

5. WLAN Module

- 1 Screw

Wireless LAN, Combo Module Cables

Note that the cables for connecting to the antennae on WLAN, WLAN & Bluetooth Combo, 3G and LTE modules are not labelled. The cables/covers (each cable will have either a black or transparent cable cover) are color coded for identification as outlined in the table below.

Module Type	Antenna Type	Cable Color	Cable Cover Type
WLAN/WLAN & Bluetooth Combo	WM 1	Black	Transparent
	WM 2	Black	White
WiGig	WG 1	Blue	Black

Cable 1 is usually connected to antenna 1 (Main) on the module, and cable 2 to antenna 2 (Aux).

Removing the WiGig Module

1. Turn **off** the computer, remove the battery (***page 2 - 5***), CPU (***page 2 - 12***) and the keyboard (***page 2 - 15***).
2. The module will be visible at point 1 under the keyboard (***Figure 13a***).
3. Carefully disconnect cables 2 - 4, then remove screw 5 from the module socket (***Figure 13b***).
4. The module 6 will pop-up (***Figure 13c***).
5. Lift the module (***Figure 13d***) up and off the computer.

a.

b.

c.

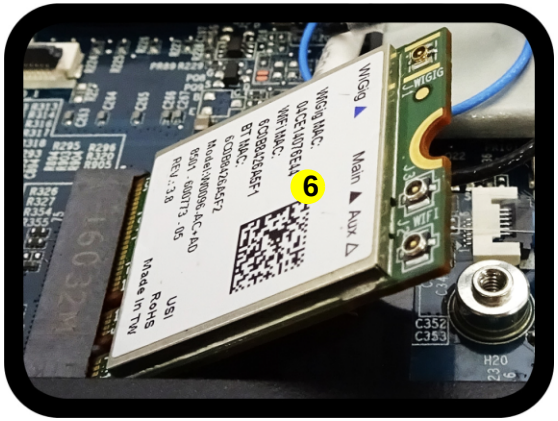

d.

Figure 14
WiGig Module Removal

a. The module will be visible at point 1 under the keyboard
b. Disconnect the cables and remove the screw.
c. The module will pop up.
d. Lift the module out.

6. WiGig Module

- 1 Screw

Figure 15
M.2 SSD Module Removal

a. Locate the module.
b. Remove the screw.
c. The module will pop-up.
d. Lift the module up off the socket.

Removing the M.2 SSD Module

1. Turn **off** the computer, remove the battery (***page 2 - 5***), and component bay cover (***page 2 - 10***).
2. Locate the module; it is visible at point 1 (***Figure 15a***).
3. Carefully remove the screw 2 from the module (***Figure 15b***).
4. The M.2 SATA module 3 will pop-up (***Figure 15c***).
5. Lift the M.2 SATA module 3 up and off the computer (***Figure 15d***).
6. Reverse the process to install a new SSD (make sure that the hexagonal screw 4 is in the correct location).

a.

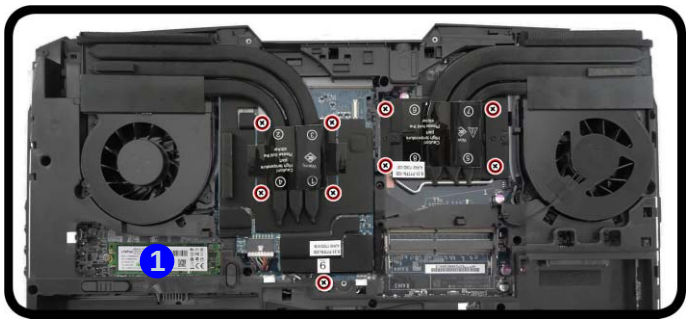

b.

c.

d.

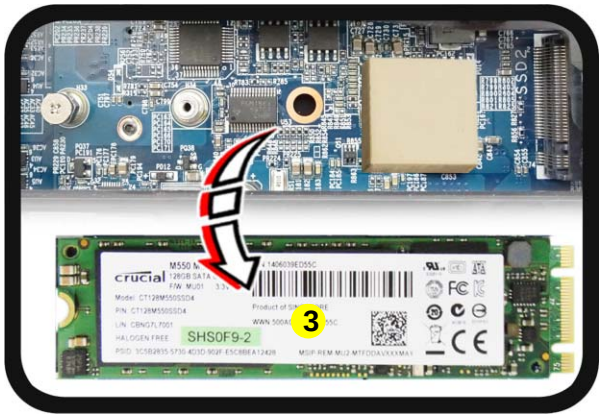

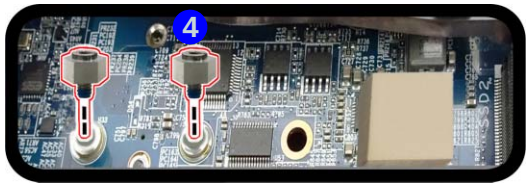

3. SSD Module

- 1 Screw

M.2 SSD Installation Procedure

1. Place the thermal pad (1) on the computer as shown (***Figure 16a***).
2. Insert the module (2) in the computer. Make sure that the hexagonal screw (3) is in the correct location (***Figure 16b***).
3. Tighten the screw (4) to secure it in place (***Figure 16c***).

Figure 16
M.2 SSD Module Installation

a. Place the thermal pad.
b. Insert the module.
c. Tighten the screw.

a.

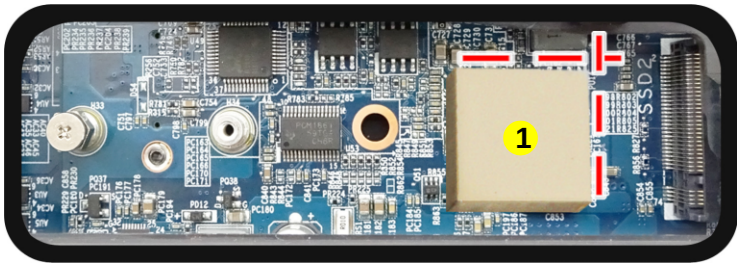

b.

c.

Thermal Pad

Make sure you place the thermal pad's adhesive side down onto the computer surface as illustrated.

The usage of the thermal pad will depend upon the thickness of the module being used.

- If you are using the thinner module, then apply the whole thermal pad provided on the computer.
- If you are using the thicker module, separate the pad into its two parts. Use the larger part and place the adhesive side onto the computer (discard the smaller part that you have separated).

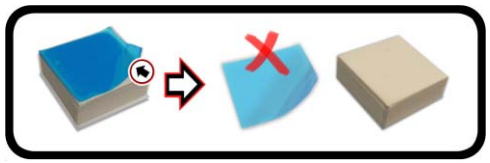

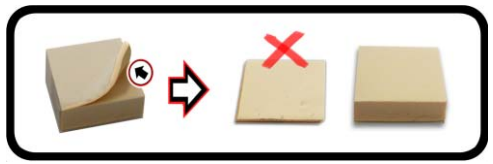

1. Thermal Pad
2. M.2 SATA Module

- 1 Screw

Figure 17
Video Card Removal Procedure

a. Remove the screws in the correct order.
b. Carefully remove the heat sink units.
c. Remove the video card screws. The video card will pop up.
d. Remove the video card.

Removing and Installing the Video Card

Video Card Removal Procedure

1. Turn **off** the computer, turn it over and remove the battery (***page 2 - 5***) and component cover (***page 2 - 10***).
2. Remove screws 1 - 5 from the heat sink unit in the order indicated on the label (i.e screw 4 first through to screw 1 last) (***Figure 17a***).
3. Carefully (**it may be hot**) remove the heat sink unit 6 (***Figure 17b***).
4. Disconnect cable 7 and remove screws 8 & 9 from the video card. The video card 10 will pop up (***Figure 17c***).
5. Remove the video card 10 (***Figure 17d***).

a.

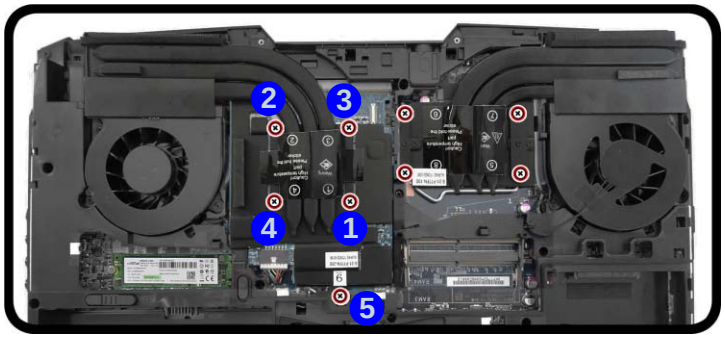

c.

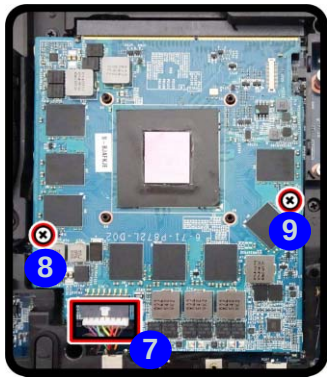

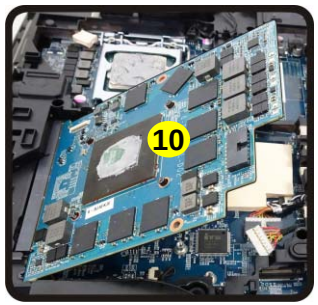

b.

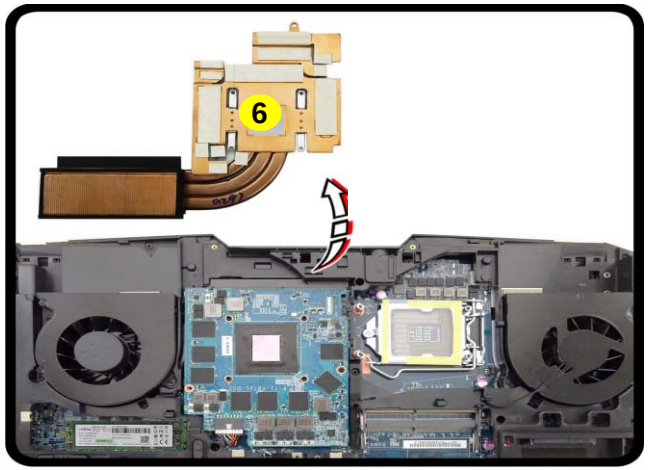

d.

Caution

The heat sink, and video card area in general, contains parts which are subject to high temperatures. Allow the area time to cool before removing these parts.

6. Heat Sink Units
10. Video Card

- 5 Screws

Heat Sink Screw Removal and Insertion

Remove the screws from the heat sink in the order indicated here: **9-8-7-6-5-4-3-2-1**.

When tightening the screws, make sure that they are tightened in the order: **1-2-3-4-5-6-7-8-9**.

Installing a New Video Card

1. Place the thermal pad 15 on the computer as shown (*Figure 18e*).
2. Prepare to fit the video card 14 into the slot by holding it at about a 30° angle (*Figure 18f*).
3. The card needs to be fully into the slot, and the video card and socket have a guide-key and pin which align to allow the card to fit securely (*Figure 18g*).
4. Fit the connectors firmly into the socket, straight and evenly.

e.

f.

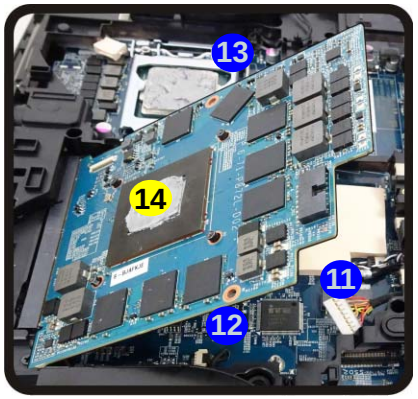

h.

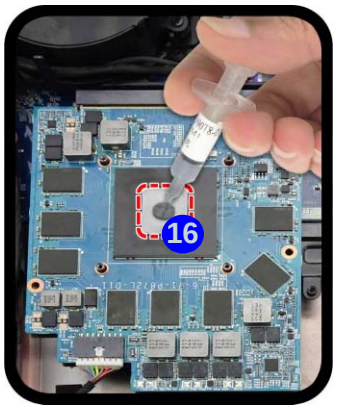

g.

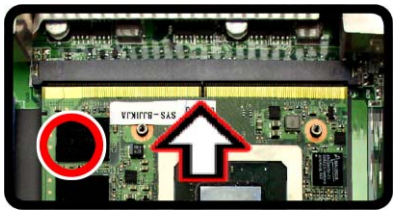

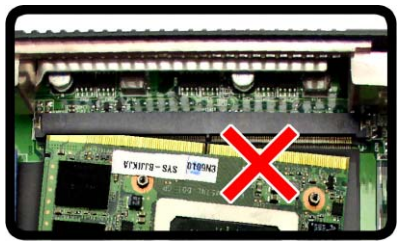

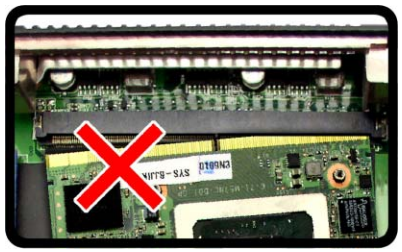

5. DO NOT attempt to push one end of the card in ahead of the other.
6. The card's pin alignment will allow it to only fit one way. **Make sure the module is seated as far into the socket as it will go**. DO NOT FORCE the card; it should fit without much pressure.
7. Connect the cable 11 and secure the card with screws 12 & 13 (*Figure 17 on page 2 - 22*).
8. Apply the whole tube of the thermal grease 16 to the center of the main VGA chip as shown (*Figure 18h*).
9. Place the heat sink back on the card, and secure the screws in the order indicated in *Figure 17 on page 2 - 22*.
10. Reinsert the component bay cover, and secure with the screws as indicated in *Figure 11 on page 2 - 15*.

Figure 18
Installing a New Video Card

e. Insert the video card at a 30 degree angle.
f. Fit the connectors straight and even, and secure the card with the screws.

Caution

The heat sink, and video card area in general, contains parts which are subject to high temperatures. Allow the area time to cool before removing these parts.

14. Video Card
15. Thermal Pad

- 2 Screws

Appendix A: Part Lists

This appendix breaks down the ***P775TM (-G) / P775TM1 (-G)*** series notebook's construction into a series of illustrations. The component part numbers are indicated in the tables opposite the drawings.

Note: This section indicates the *manufacturer's* part numbers. Your organization may use a different system, so be sure to cross-check any relevant documentation.

Note: Some assemblies may have parts in common (especially screws). However, the part lists DO NOT indicate the total number of duplicated parts used.

Note: Be sure to check any update notices. The parts shown in these illustrations are appropriate for the system at the time of publication. Over the product life, some parts may be improved or re-configured, resulting in *new* part numbers.

Part List Illustration Location

The following table indicates where to find the appropriate part list illustration.

Table A- 1
Part List Illustration Location

Parts	
Top	*page A - 3*
Bottom	*page A - 4*
LCD (LG-AU)	*page A - 5*
LCD (AU)	*page A - 6*
MB	*page A - 7*
HDD	*page A - 8*
VGA (G1/G3)	*page A - 9*
VGA (G2)	*page A - 10*

Top

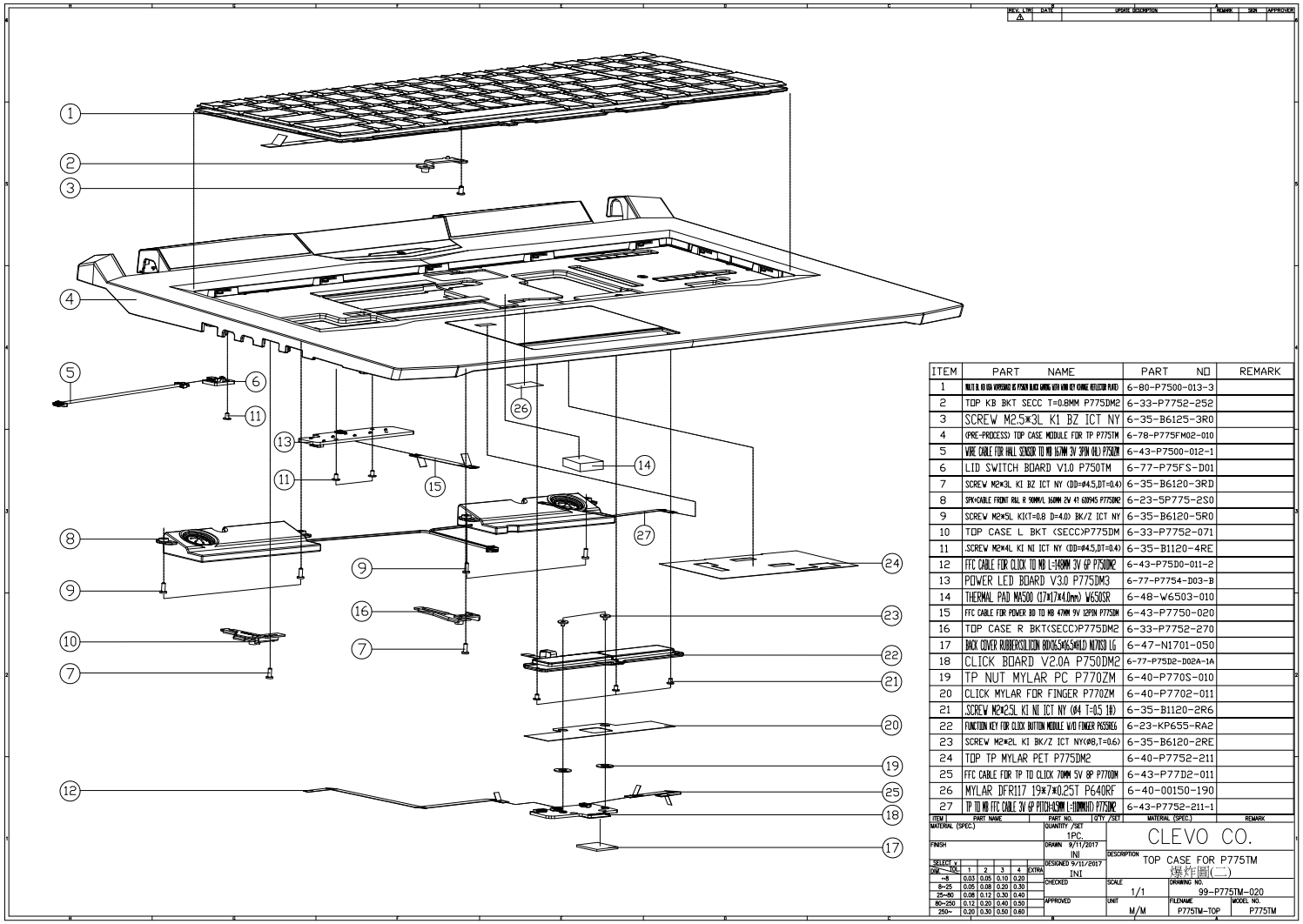

ITEM	PART NAME	PART NO	REMARK
1	MULTI B. KB SUS W/RUBBER(0.8) P750M BLACK GRAINS WITH WIN ICT (GRAINE REFLECTOR PLATE)	6-80-P7500-013-3	
2	TOP KB BKT SECC T=0.8MM P775DM2	6-33-P7752-252	
3	SCREW M2.5*3L K1 BZ ICT NY	6-35-B6125-3R0	
4	(PRE-PROCESS) TOP CASE MODULE FOR TP P775TM	6-78-P775FM02-010	
5	WIRE CABLE FOR HALL SENSOR TO MB 160MM 3V 3PIN 0.8LP P750DM	6-43-P7500-012-1	
6	LID SWITCH BOARD V1.0 P750TM	6-77-P75FS-D01	
7	SCREW M2*3L K1 BZ ICT NY (DD=#4.5,DT=0.4)	6-35-B6120-3RD	
8	SPK+CABLE FRONT RAL R 90MM/L 160MM 2V 4Ω 60W45 P775DM2	6-23-5P775-2S0	
9	SCREW M2*5L K1CT=0.8 D=4.0) BK/Z ICT NY	6-35-B6120-5R0	
10	TOP CASE L BKT (SECC)P775DM	6-33-P7752-071	
11	SCREW M2*4L K1 NI ICT NY (DD=#4.5,DT=0.4)	6-35-B1120-4RE	
12	FFC CABLE FOR CLICK TO MB L=160MM 3V 6P P750DM2	6-43-P75D0-011-2	
13	POWER LED BOARD V3.0 P775DM3	6-77-P7754-D03-B	
14	THERMAL PAD MA500 (17*17*4.0mm) W6503R	6-48-W6503-010	
15	FFC CABLE FOR POWER BD TO MB 47MM 9V 12PIN P775DM	6-43-P7750-020	
16	TOP CASE R BKT(SECC)P775DM2	6-33-P7752-270	
17	BACK COVER RUBBER(SILICON 80X65.5X6.5MM)LD N1703 LG	6-47-N1701-050	
18	CLICK BOARD V2.0A P750DM2	6-77-P75D2-D02A-1A	
19	TP NUT MYLAR PC P770ZM	6-40-P770S-010	
20	CLICK MYLAR FOR FINGER P770ZM	6-40-P7702-011	
21	SCREW M2*2.5L K1 NI ICT NY (Ø4 T=0.5 1H)	6-35-B1120-2R6	
22	FUNCTION KEY FOR CLICK BUTTON MODULE W/O FINGER P655RE6	6-23-KP655-RA2	
23	SCREW M2*2L K1 BK/Z ICT NY(Ø8,T=0.6)	6-35-B6120-2RE	
24	TOP TP MYLAR PET P775DM2	6-40-P7752-211	
25	FFC CABLE FOR TP TO CLICK 70MM 5V 8P P770DM	6-43-P77D2-011	
26	MYLAR DFR117 19*7*0.25T P640RF	6-40-00150-190	
27	TP TO MB FFC CABLE 2V 6P PITCH=1.25MM L=110MM(UD) P775DM2	6-43-P7752-211-1	

ITEM	PART NAME	PART NO.	QTY./SET	MATERIAL (SPEC.)	REMARK

MATERIAL (SPEC.)
FINISH

QUANTITY /SET: 1PC.
DRAWN: 9/11/2017 INI
DESIGNED: 9/11/2017 INI
CHECKED
APPROVED

CLEVO CO.

DESCRIPTION: TOP CASE FOR P775TM (爆炸圖(二))
SCALE: 1/1
UNIT: M/M
DRAWING NO.: 99-P775TM-020
FILENAME: P775TM-TOP
MODEL NO.: P775TM

SELECT Y					
DIM	TOL	1	2	3	4	EXTRA
~8	0.03	0.05	0.10	0.20	
8~25	0.05	0.08	0.20	0.30	
25~80	0.08	0.12	0.30	0.40	
80~250	0.12	0.20	0.40	0.50	
250~	0.20	0.30	0.50	0.60	

Figure A - 1
Top

Bottom

Figure A - 2
Bottom

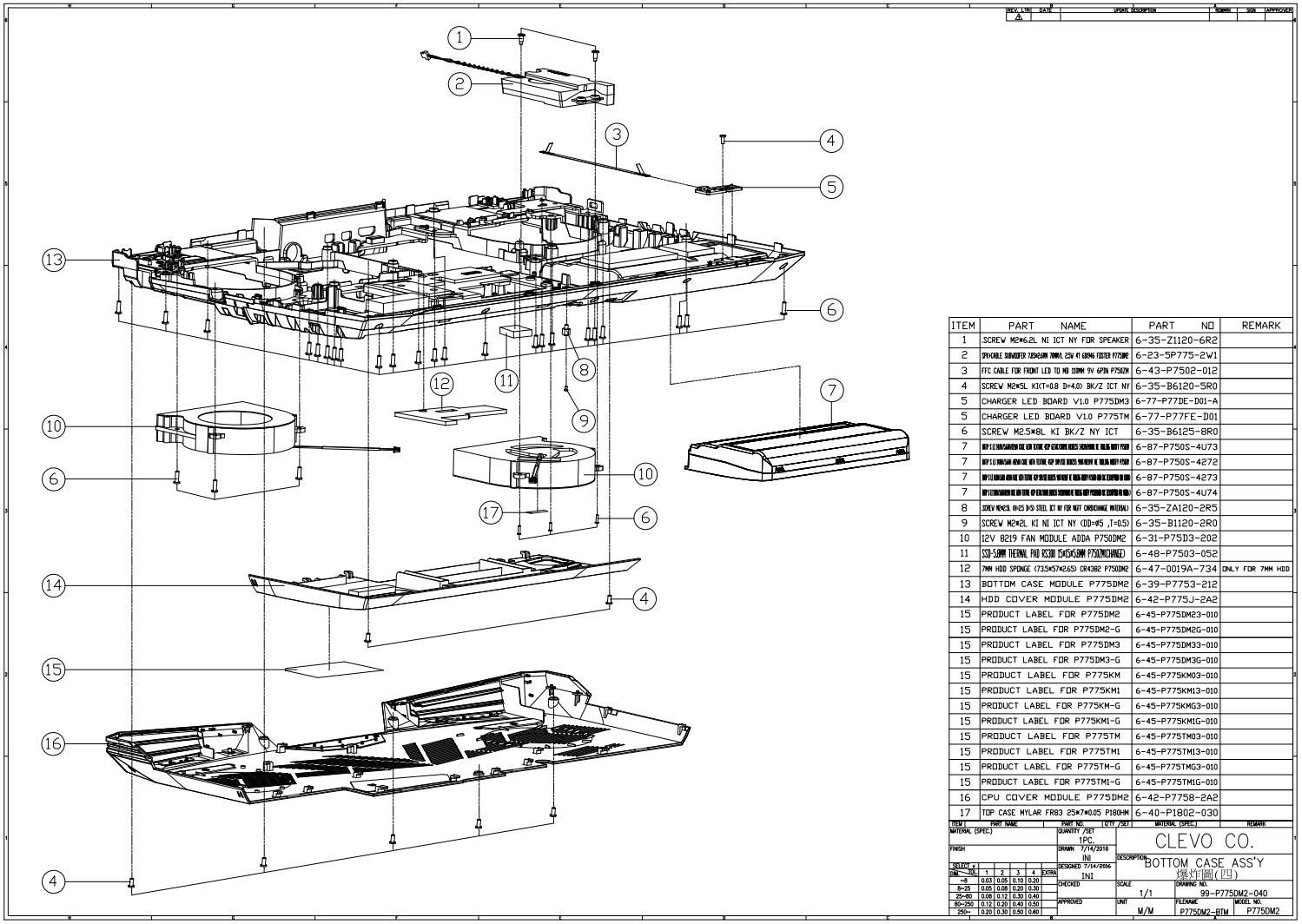

ITEM	PART NAME	PART NO	REMARK
1	SCREW M2*6.2L NI ICT NY FOR SPEAKER	6-35-Z1120-6R2	
2	SPK/CABLE SUBWOFER 7.6*5.6*8M 7PIN/L 25W 4Ω 68PHS FOSTER P775DM2	6-23-5P775-2W1	
3	FFC CABLE FOR FRONT LED TO MB 110MM 9V 6PIN P7562M	6-43-P7502-012	
4	SCREW M2*5L KI(T=0.8 D=4.0) BK/Z ICT NY	6-35-B6120-5R0	
5	CHARGER LED BOARD V1.0 P775DM3	6-77-P77DE-D01-A	
5	CHARGER LED BOARD V1.0 P775TM	6-77-P77FE-D01	
6	SCREW M2.5*8L KI BK/Z NY ICT	6-35-B6125-8R0	
7	[illegible]	6-87-P750S-4U73	
7	[illegible]	6-87-P750S-4272	
7	[illegible]	6-87-P750S-4273	
7	[illegible]	6-87-P750S-4U74	
8	SCREW M2*2L (D=2.5 D=3) STEEL ICT NY FOR NUT (NO&CHANGE MATERIAL)	6-35-ZA120-2R5	
9	SCREW M2*2L KI NI ICT NY (DD=#5 ,T=0.5)	6-35-B1120-2R0	
10	12V 8219 FAN MODULE ADDA P750DM2	6-31-P75D3-202	
11	SSD-5.0MM THERMAL PAD KS300 154*95*5.0MM P750(NO&CHANGE)	6-48-P7503-052	
12	7MM HDD SPONGE (73.5*57*2.65) CR4382 P750DM2	6-47-0019A-734	ONLY FOR 7MM HDD
13	BOTTOM CASE MODULE P775DM2	6-39-P7753-212	
14	HDD COVER MODULE P775DM2	6-42-P775J-2A2	
15	PRODUCT LABEL FOR P775DM2	6-45-P775DM23-010	
15	PRODUCT LABEL FOR P775DM2-G	6-45-P775DM2G-010	
15	PRODUCT LABEL FOR P775DM3	6-45-P775DM33-010	
15	PRODUCT LABEL FOR P775DM3-G	6-45-P775DM3G-010	
15	PRODUCT LABEL FOR P775KM	6-45-P775KM03-010	
15	PRODUCT LABEL FOR P775KM1	6-45-P775KM13-010	
15	PRODUCT LABEL FOR P775KM-G	6-45-P775KMG3-010	
15	PRODUCT LABEL FOR P775KM1-G	6-45-P775KM1G-010	
15	PRODUCT LABEL FOR P775TM	6-45-P775TM03-010	
15	PRODUCT LABEL FOR P775TM1	6-45-P775TM13-010	
15	PRODUCT LABEL FOR P775TM-G	6-45-P775TMG3-010	
15	PRODUCT LABEL FOR P775TM1-G	6-45-P775TM1G-010	
16	CPU COVER MODULE P775DM2	6-42-P7758-2A2	
17	TOP CASE MYLAR FR83 25*7*0.05 P180HM	6-40-P1802-030	

ITEM	PART NAME	PART NO.	QTY /SET	MATERIAL (SPEC.)	REMARK

MATERIAL (SPEC.) | QUANTITY /SET 1PC. | DRAWN 7/14/2016 INI | CLEVO CO.
FINISH | DESIGNED 7/14/2016 INI | DESCRIPTION BOTTOM CASE ASS'Y 機殼組圖(四)
CHECKED | SCALE 1/1 | DRAWING NO. 99-P775DM2-040
APPROVED | UNIT M/M | FILENAME P775DM2-BTM | MODEL NO. P775DM2

DIM	TOL	1	2	3	4	EXTRA
~8		0.03	0.05	0.10	0.20	
8~25		0.05	0.08	0.20	0.30	
25~80		0.08	0.12	0.30	0.40	
80~250		0.12	0.20	0.40	0.50	
250~		0.20	0.30	0.50	0.60	

LCD (LG-AU)

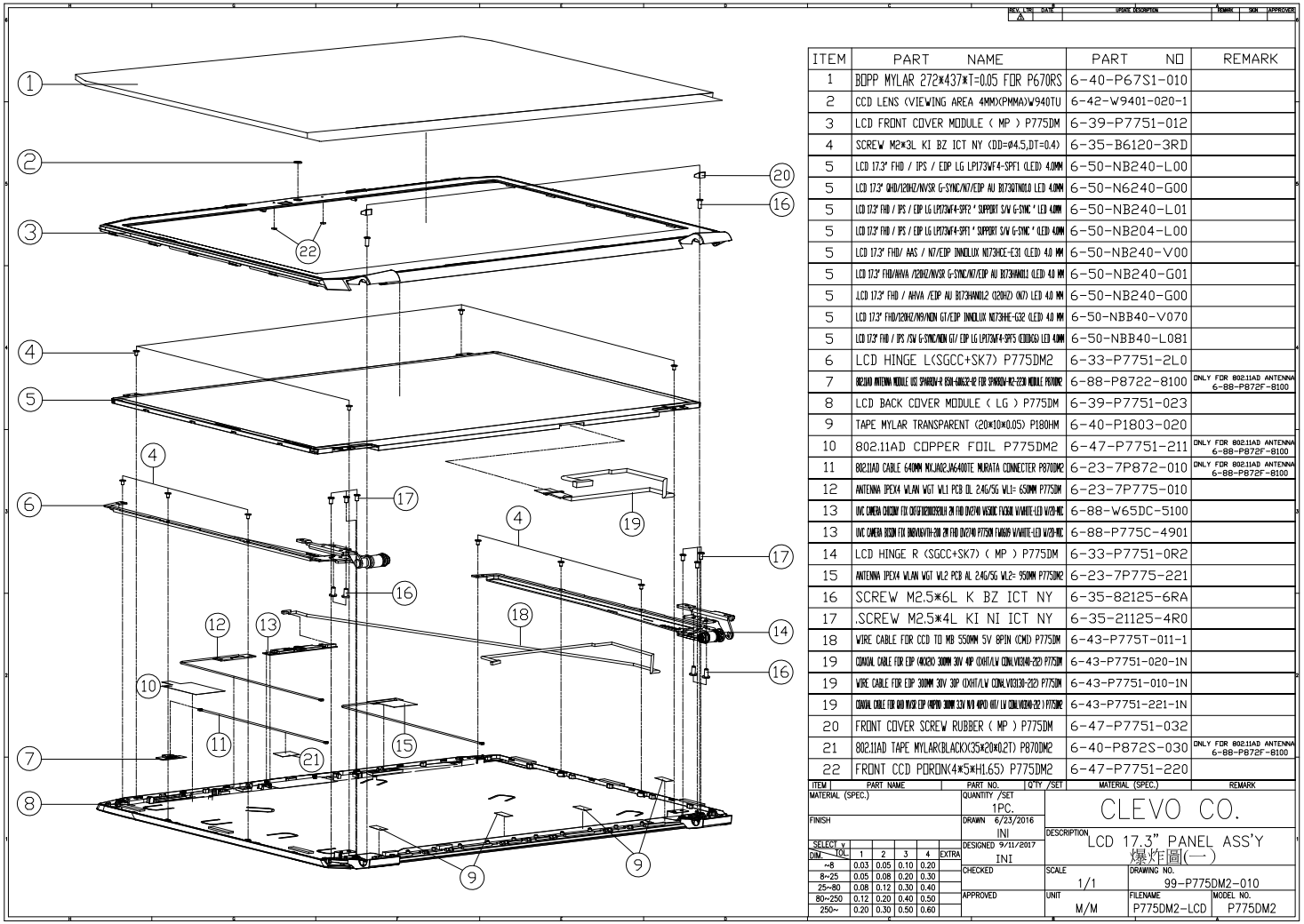

ITEM	PART NAME	PART NO	REMARK
1	BOPP MYLAR 272*437*T=0.05 FOR P670RS	6-40-P67S1-010	
2	CCD LENS (VIEWING AREA 4MM)(PMMA)W940TU	6-42-W9401-020-1	
3	LCD FRONT COVER MODULE (MP) P775DM	6-39-P7751-012	
4	SCREW M2*3L KI BZ ICT NY (DD=Ø4.5,DT=0.4)	6-35-B6120-3RD	
5	LCD 17.3" FHD / IPS / EDP LG LP173WF4-SPF1 (LED) 4.0MM	6-50-NB240-L00	
5	LCD 17.3" QHD/120HZ/NVSR G-SYNC/N7/EDP AU B173QTN01.0 LED 4.0MM	6-50-N6240-G00	
5	LCD 17.3" FHD / IPS / EDP LG LP173WF4-SPF2 " SUPPORT S/W G-SYNC " LED 4.0MM	6-50-NB240-L01	
5	LCD 17.3" FHD / IPS / EDP LG LP173WF4-SPF1 " SUPPORT S/W G-SYNC " (LED) 4.0MM	6-50-NB204-L00	
5	LCD 17.3" FHD/ AAS / N7/EDP INNOLUX N173HCE-E31 (LED) 4.0 MM	6-50-NB240-V00	
5	LCD 17.3" FHD/AHVA /120HZ/NVSR G-SYNC/N7/EDP AU B173HAN01.2 (LED) 4.0 MM	6-50-NB240-G01	
5	LCD 17.3" FHD / AHVA /EDP AU B173HAN01.2 (120HZ) (N7) LED 4.0 MM	6-50-NB240-G00	
5	LCD 17.3" FHD/120HZ/N9/NON G7/EDP INNOLUX N173HHE-G32 (LED) 4.0 MM	6-50-NBB40-V070	
5	LCD 17.3" FHD / IPS /SW G-SYNC/NON G7/ EDP LG LP173WF4-SPF5 (C10DG9) LED 4.0MM	6-50-NBB40-L081	
6	LCD HINGE L(SGCC+SK7) P775DM2	6-33-P7751-2L0	
7	802.11AD ANTENNA MODULE USI SPARROW-R BSH-6065Z-R2 FOR SPARROW-R2-2230 MODULE PCIE0R2	6-88-P8722-8100	ONLY FOR 802.11AD ANTENNA 6-88-P872F-B100
8	LCD BACK COVER MODULE (LG) P775DM	6-39-P7751-023	
9	TAPE MYLAR TRANSPARENT (20*10*0.05) P180HM	6-40-P1803-020	
10	802.11AD COPPER FOIL P775DM2	6-47-P7751-211	ONLY FOR 802.11AD ANTENNA 6-88-P872F-B100
11	802.11AD CABLE 640MM MX.MQ2.MG400TE MURATA CONNECTER P870DM2	6-23-7P872-010	ONLY FOR 802.11AD ANTENNA 6-88-P872F-B100
12	ANTENNA IPEX4 WLAN WGT WL1 PCB DL 2.4G/5G WL1= 650MM P775DM	6-23-7P775-010	
13	UVC CAMERA CHICONY FIX CH9141B2W02R0UH 2M FHD (1920) W5DDC FVC6W W/WHITE-LED W/2B-MIC	6-88-W65DC-5100	
13	UVC CAMERA DESON FIX DB8V1U5/FH-2M 2M FHD (1920) P775DM FVA6B9 W/WHITE-LED W/2B-MIC	6-88-P775C-4901	
14	LCD HINGE R (SGCC+SK7) (MP) P775DM	6-33-P7751-0R2	
15	ANTENNA IPEX4 WLAN WGT WL2 PCB AL 2.4G/5G WL2= 950MM P775DM2	6-23-7P775-221	
16	SCREW M2.5*6L K BZ ICT NY	6-35-82125-6RA	
17	.SCREW M2.5*4L KI NI ICT NY	6-35-21125-4R0	
18	WIRE CABLE FOR CCD TO MB 550MM 5V 8PIN (CMD) P775DM	6-43-P775T-011-1	
19	COAXIAL CABLE FOR EDP (40X20) 300MM 30V 40P (DX11T/LV CONL.V0240-22D) P775DM	6-43-P7751-020-1N	
19	WIRE CABLE FOR EDP 300MM 30V 30P (DX11T/LV CONL.V0230-22D) P775DM	6-43-P7751-010-1N	
19	COAXIAL CABLE FOR QHD NVSR EDP (40PIN) 300MM 3.3V N/A 40PIN (11T/ LV CONL.V0240-22) P775DM2	6-43-P7751-221-1N	
20	FRONT COVER SCREW RUBBER (MP) P775DM	6-47-P7751-032	
21	802.11AD TAPE MYLAR(BLACK)(35*20*0.2T) P870DM2	6-40-P872S-030	ONLY FOR 802.11AD ANTENNA 6-88-P872F-B100
22	FRONT CCD PORON(4*5*H1.65) P775DM2	6-47-P7751-220	

ITEM	PART NAME	PART NO.	Q'TY /SET	MATERIAL (SPEC.)	REMARK

MATERIAL (SPEC.)	QUANTITY /SET 1PC.	CLEVO CO.	
FINISH	DRAWN 6/23/2016 INI	DESCRIPTION LCD 17.3" PANEL ASS'Y 爆炸圖(一)	
	DESIGNED 9/11/2017 INI		
	CHECKED	SCALE 1/1	DRAWING NO. 99-P775DM2-010
	APPROVED	UNIT M/M	FILENAME P775DM2-LCD / MODEL NO. P775DM2

SELECT ▽ DIM \ TOL	1	2	3	4	EXTRA
~8	0.03	0.05	0.10	0.20	
8~25	0.05	0.08	0.20	0.30	
25~80	0.08	0.12	0.30	0.40	
80~250	0.12	0.20	0.40	0.50	
250~	0.20	0.30	0.50	0.60	

Figure A - 3
LCD (LG-AU)

LCD (AU)

Figure A - 4
LCD (AU)

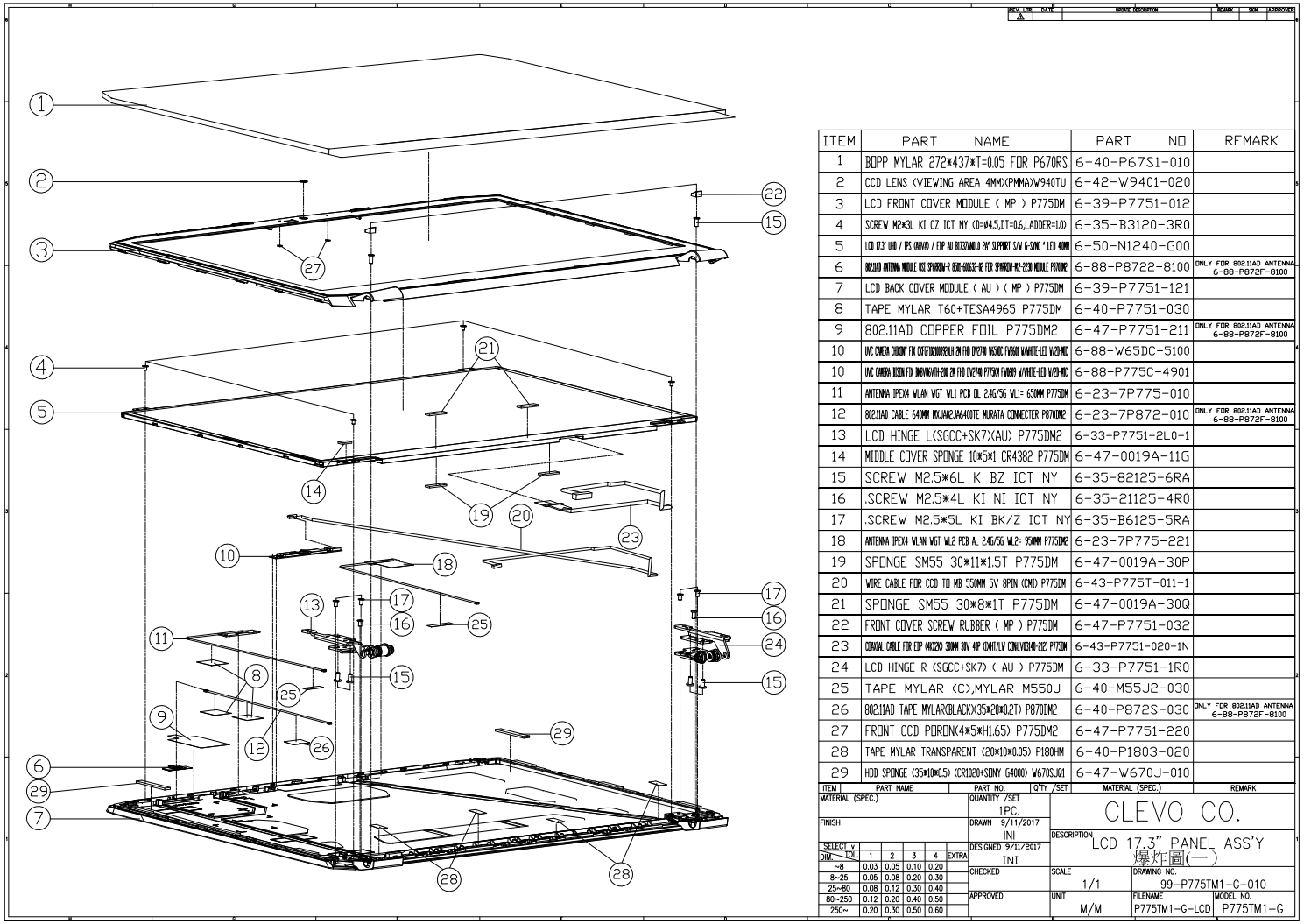

ITEM	PART NAME	PART NO	REMARK
1	BOPP MYLAR 272*437*T=0.05 FOR P670RS	6-40-P67S1-010	
2	CCD LENS (VIEWING AREA 4MM)(PMMA)W940TU	6-42-W9401-020	
3	LCD FRONT COVER MODULE (MP) P775DM	6-39-P7751-012	
4	SCREW M2*3L KI CZ ICT NY (D=Ø4.5,DT=0.6,LADDER=1.0)	6-35-B3120-3R0	
5	LCD 17.3" UHD / IPS (NAVA) / EDP AU B173QAN01.0 2W SUPPORT S/W G-SYNC * LED 40PIN	6-50-N1240-G00	
6	802.11AD ANTENNA MODULE (QS) SPW8QDM-P (SUE-60N32-R) FOR SPW8QDM-M2-2220 MODULE P870DM2	6-88-P8722-8100	ONLY FOR 802.11AD ANTENNA 6-88-P872F-8100
7	LCD BACK COVER MODULE (AU) (MP) P775DM	6-39-P7751-121	
8	TAPE MYLAR T60+TESA4965 P775DM	6-40-P7751-030	
9	802.11AD COPPER FOIL P775DM2	6-47-P7751-211	ONLY FOR 802.11AD ANTENNA 6-88-P872F-8100
10	UVC CAMERA (HICON) FIX (OV5693)(W25Q80) 2M FHD (V2.74) W530UC FW600 W/WHITE-LED W/2P-MIC	6-88-W65DC-5100	
10	UVC CAMERA (ISSI) FIX (MB86A61)(TH-2M) 2M FHD (V2.74) P775DM FW600 W/WHITE-LED W/2P-MIC	6-88-P775C-4901	
11	ANTENNA IPEX4 WLAN WGT WL1 PCB OL 2.4G/5G WL1= 650MM P775DM	6-23-7P775-010	
12	802.11AD CABLE 640MM MXJA62JA6400TE MURATA CONNECTER P870DM2	6-23-7P872-010	ONLY FOR 802.11AD ANTENNA 6-88-P872F-8100
13	LCD HINGE L(SGCC+SK7)(AU) P775DM2	6-33-P7751-2L0-1	
14	MIDDLE COVER SPONGE 10*5*1 CR4382 P775DM	6-47-0019A-11G	
15	SCREW M2.5*6L K BZ ICT NY	6-35-82125-6RA	
16	.SCREW M2.5*4L KI NI ICT NY	6-35-21125-4R0	
17	.SCREW M2.5*5L KI BK/Z ICT NY	6-35-B6125-5RA	
18	ANTENNA IPEX4 WLAN WGT WL2 PCB AL 2.4G/5G WL2= 950MM P775DM2	6-23-7P775-221	
19	SPONGE SM55 30*11*1.5T P775DM	6-47-0019A-30P	
20	WIRE CABLE FOR CCD TO MB 550MM 5V 8PIN (CMD) P775DM	6-43-P775T-011-1	
21	SPONGE SM55 30*8*1T P775DM	6-47-0019A-30Q	
22	FRONT COVER SCREW RUBBER (MP) P775DM	6-47-P7751-032	
23	COAXIAL CABLE FOR EDP (40X2K) 300MM 30V 40P (DOUT/LV CONV.V2.44-2ED) P775DM	6-43-P7751-020-1N	
24	LCD HINGE R (SGCC+SK7) (AU) P775DM	6-33-P7751-1R0	
25	TAPE MYLAR (C),MYLAR M550J	6-40-M55J2-030	
26	802.11AD TAPE MYLAR(BLACK)(35*20*0.2T) P870DM2	6-40-P872S-030	ONLY FOR 802.11AD ANTENNA 6-88-P872F-8100
27	FRONT CCD PORON(4*5*H1.65) P775DM2	6-47-P7751-220	
28	TAPE MYLAR TRANSPARENT (20*10*0.05) P180HM	6-40-P1803-020	
29	HDD SPONGE (35*10*0.5) (CR1020+SONY G4000) W670SJQ1	6-47-W670J-010	

ITEM	PART NAME	PART NO.	QTY /SET	MATERIAL (SPEC.)	REMARK

MATERIAL (SPEC.)	QUANTITY /SET 1PC.	CLEVO CO.	
FINISH	DRAWN 9/11/2017 INI	DESCRIPTION LCD 17.3" PANEL ASS'Y 爆炸圖(一)	
SELECT V	DESIGNED 9/11/2017 INI		
CHECKED		SCALE 1/1	DRAWING NO. 99-P775TM1-G-010
APPROVED		UNIT M/M	FILENAME P775TM1-G-LCD / MODEL NO. P775TM1-G

DIM. \ TOL.	1	2	3	4	EXTRA
~8	0.03	0.05	0.10	0.20	
8~25	0.05	0.08	0.20	0.30	
25~80	0.08	0.12	0.30	0.40	
80~250	0.12	0.20	0.40	0.50	
250~	0.20	0.30	0.50	0.60	

MB

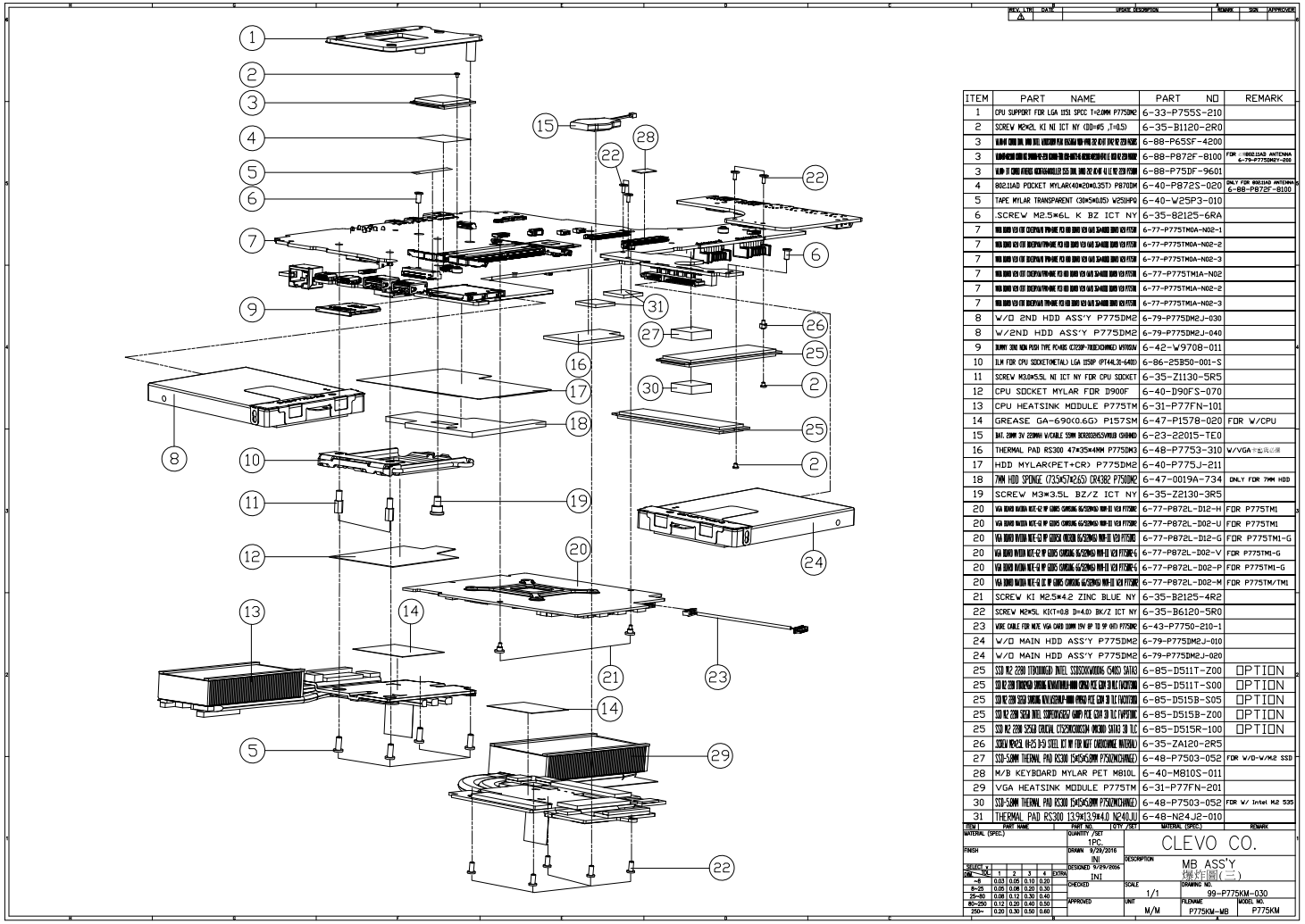

ITEM	PART NAME	PART NO	REMARK
1	CPU SUPPORT FOR LGA 1151 SPCC T=2.0MM P775DM2	6-33-P755S-210	
2	SCREW M2*2L KI NI ICT NY (OD=#5 ,T=0.5)	6-35-B1120-2R0	
3	[illegible]	6-88-P65SF-4200	
3	[illegible]	6-88-P872F-8100	FOR [illegible]802.11AD ANTENNA 6-79-P775DM2Y-200
3	[illegible]	6-88-P75DF-9601	
4	802.11AD POCKET MYLAR(40*20*0.3ST) P870DM	6-40-P872S-020	ONLY FOR 802.11AD ANTENNA 6-88-P872F-8100
5	TAPE MYLAR TRANSPARENT (30*5*0.05) W25UHPG	6-40-W25P3-010	
6	.SCREW M2.5*6L K BZ ICT NY	6-35-B2125-6RA	
7	[illegible]	6-77-P775TM0A-N02-1	
7	[illegible]	6-77-P775TM0A-N02-2	
7	[illegible]	6-77-P775TM0A-N02-3	
7	[illegible]	6-77-P775TM1A-N02	
7	[illegible]	6-77-P775TM1A-N02-2	
7	[illegible]	6-77-P775TM1A-N02-3	
8	W/O 2ND HDD ASS'Y P775DM2	6-79-P775DM2J-030	
8	W/2ND HDD ASS'Y P775DM2	6-79-P775DM2J-040	
9	DUMMY 30N NON PUSH TYPE PCI-KBS (2725P-7010)(CHANGE) VSYNGIN	6-42-W9708-011	
10	ILM FOR CPU SOCKET(METAL) LGA 1150P (PT44.2E-6410)	6-86-25B50-001-S	
11	SCREW M3.0*5.5L NI ICT NY FOR CPU SOCKET	6-35-Z1130-5R5	
12	CPU SOCKET MYLAR FOR D900F	6-40-D90FS-070	
13	CPU HEATSINK MODULE P775TM	6-31-P77FN-101	
14	GREASE GA-690(0.6G) P157SM	6-47-P1578-020	FOR W/CPU
15	[illegible]	6-23-22015-TE0	
16	THERMAL PAD RS300 47*35*4MM P775DM3	6-48-P7753-310	W/VGA [illegible]
17	HDD MYLAR(PET+CR) P775DM2	6-40-P775J-211	
18	7MM HDD SPONGE (73.5*57*2.65) CR4382 P750DM2	6-47-0019A-734	ONLY FOR 7MM HDD
19	SCREW M3*3.5L BZ/Z ICT NY	6-35-Z2130-3R5	
20	[illegible]	6-77-P872L-D12-H	FOR P775TM1
20	[illegible]	6-77-P872L-D02-U	FOR P775TM1
20	[illegible]	6-77-P872L-D12-G	FOR P775TM1-G
20	[illegible]	6-77-P872L-D02-V	FOR P775TM1-G
20	[illegible]	6-77-P872L-D02-P	FOR P775TM1-G
20	[illegible]	6-77-P872L-D02-M	FOR P775TM/TM1
21	SCREW KI M2.5*4.2 ZINC BLUE NY	6-35-B2125-4R2	
22	SCREW M2*5L KI(T=0.8 D=4.0) BK/Z ICT NY	6-35-B6120-5R0	
23	WIRE CABLE FOR NOTE VGA CARD 10MM 15V (P 10 5P 0.0T) P775DM2	6-43-P7750-210-1	
24	W/O MAIN HDD ASS'Y P775DM2	6-79-P775DM2J-010	
24	W/O MAIN HDD ASS'Y P775DM2	6-79-P775DM2J-020	
25	SSD M.2 2280 1TB(DONGLE) INTEL SSDSCKKW010G6 (S4KD) SATA3	6-85-D511T-Z00	OPTION
25	SSD M.2 2280 F128(DONGLE) SAMSUNG MZNLN128HAHQ-000H1 (S4KD) PCIE GEN 3X BLC (ACCUTECH)	6-85-D511T-S00	OPTION
25	SSD M.2 2280 S256 SAMSUNG MZVLW256HAHP-000H1 (S4KD) PCIE GEN 3X BLC (ACCUTECH)	6-85-D515B-S05	OPTION
25	SSD M.2 2280 S256 INTEL SSDPEKKW256G7 (S4KD) PCIE GEN 3X BLC (FUNTOSTAC)	6-85-D515B-Z00	OPTION
25	SSD M.2 2280 S256 CRUCIAL CT256M500SSD1 (M2KD) SATA3 3X BLC	6-85-D515R-100	OPTION
26	SCREW M*0.5L H=2.5 B-S3 STEEL ICT NY FOR NOTE (ARCHCHANGE MATERIAL)	6-35-ZA120-2R5	
27	SSD-5.0MM THERMAL PAD RS300 15*15*5.0MM P750(NCCHANGE)	6-48-P7503-052	FOR W/O-V/M.2 SSD
28	M/B KEYBOARD MYLAR PET M810L	6-40-M810S-011	
29	VGA HEATSINK MODULE P775TM	6-31-P77FN-201	
30	SSD-5.0MM THERMAL PAD RS300 15*15*5.0MM P750(NCCHANGE)	6-48-P7503-052	FOR W/ Intel M.2 535
31	THERMAL PAD RS300 13.9*13.9*4.0 N240JU	6-48-N24J2-010	

ITEM	PART NAME	PART NO. (QTY /SET)	MATERIAL (SPEC.)	REMARK

MATERIAL (SPEC.) | QUANTITY /SET 1PC. | CLEVO CO.

FINISH | DRAWN 9/29/2016 INI | DESCRIPTION: MB ASS'Y 機件圖(二)

SELECT ▼ DIM ▶ TOL	1	2	3	5	EXTRA
~6	0.03	0.05	0.10	0.20	
6~25	0.05	0.08	0.20	0.30	
25~80	0.08	0.12	0.30	0.40	
80~250	0.12	0.20	0.40	0.50	
250~	0.20	0.30	0.50	0.60	

DESIGNED 9/29/2016 INI | CHECKED | APPROVED | SCALE 1/1 | UNIT M/M | DRAWING NO. 99-P775KM-030 | FILENAME P775KM-MB | MODEL NO. P775KM

Figure A - 5
MB

HDD

Figure A - 6
HDD

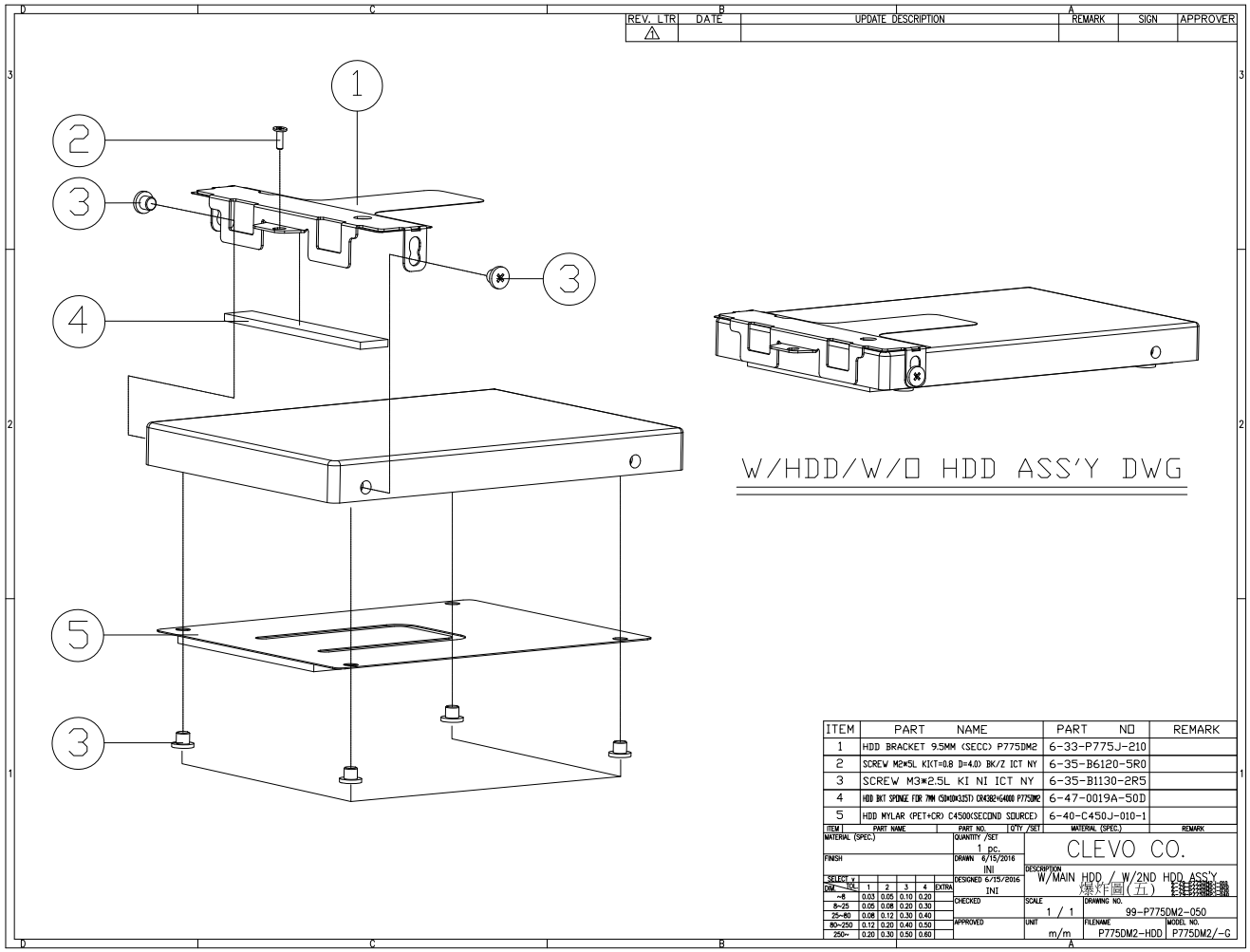

VGA (G1/G3)

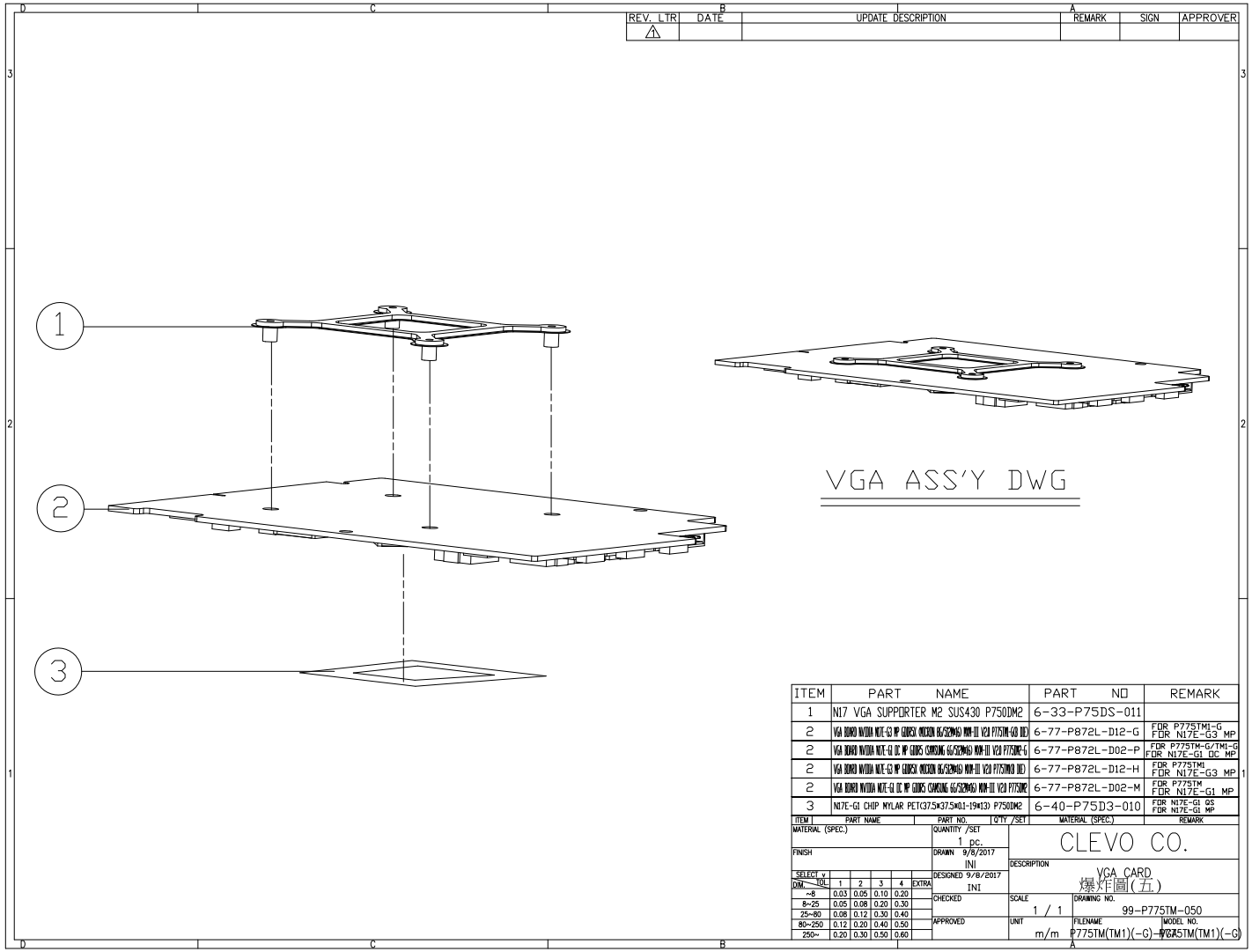

Figure A - 7
VGA (G1/G3)

VGA (G2)

Figure A - 8
VGA (G2)

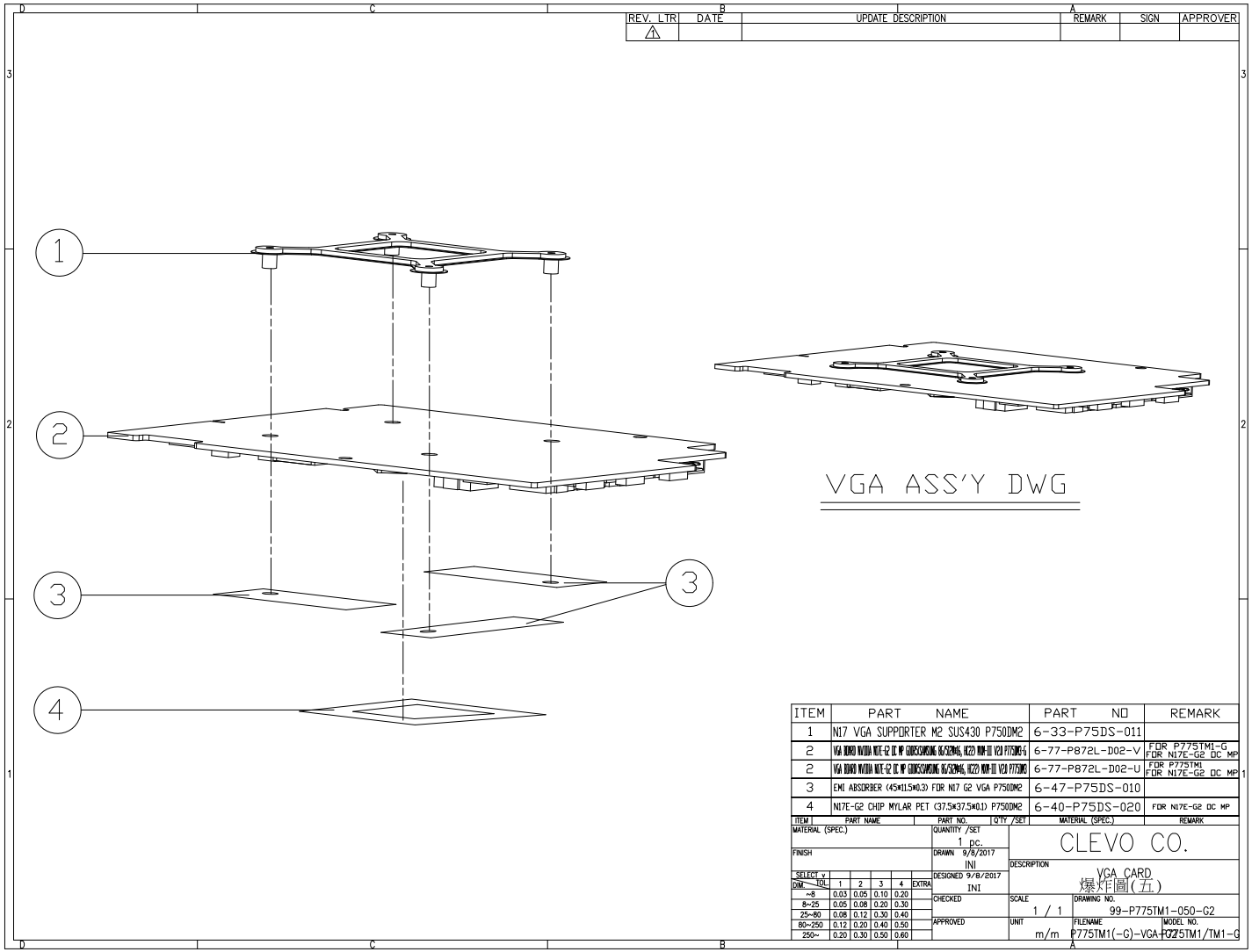

Appendix B: Schematic Diagrams

This appendix has circuit diagrams of the ***P775TM (-G) / P775TM1 (-G)*** notebook's PCB's. The following table indicates where to find the appropriate schematic diagram.

Diagram - Page	Diagram - Page	Diagram - Page
Block Diagram - Page B - 2	*M.2 3G+USB & WLAN+BT - Page B - 26*	*VCore - Page B - 50*
Processor 1/5 - Page B - 3	*M.2 PCIE4X SSD1 & SSD2 - Page B - 27*	*VCore Output Stage - Page B - 51*
Processor 2/5 - Page B - 4	*Realtek ALC898 - Page B - 28*	*VCCSA / VCCGT - Page B - 52*
Processor 3/5 - Page B - 5	*PCM1861 + TAS5766DCA - Page B - 29*	*Power Charger, DC-In - Page B - 53*
Processor 4/5 - Page B - 6	*Subwoofer - Page B - 30*	*P750DM HDD Board - Page B - 54*
Processor 5/5 - Page B - 7	*EC IT8587 - Page B - 31*	*P750DM Power LED Board - Page B - 55*
DDR4 CHA SO-DIMM_0 - Page B - 8	*Second EC IT8587 - Page B - 32*	*P750DM Click Board - Page B - 56*
DDR4 CHA SO-DIMM_1 - Page B - 9	*Backlight Keyboard - Page B - 33*	*P750DM Audio Board - Page B - 57*
DDR4 CHB SO-DIMM_0 - Page B - 10	*LID SW, Fan, LED Conn - Page B - 34*	*P750DM Audio ESS DAC - Page B - 58*
DDR4 CHB SO-DIMM_1 - Page B - 11	*Fan, TP, FP, Multi-Con - Page B - 35*	*P750DM Audio HP AMP - Page B - 59*
Panel, Inverter, CRT - Page B - 12	*LAN E2500 - Page B - 36*	*P750DM Audio Board - Page B - 60*
Display Port A - Page B - 13	*PS8338B + PS8330B - Page B - 37*	*P775DM Audio Board - Page B - 61*
Display Port B - Page B - 14	*TBT - Page B - 38*	*P775DM Audio ESS DAC - Page B - 62*
HDMI - Page B - 15	*Power - Page B - 39*	*P775DM Audio HP AMP - Page B - 63*
MXM PCI-E - Page B - 16	*TPS65982 - Page B - 40*	*P775DM Audio Board - Page B - 64*
Lynix Point 1/7 - Page B - 17	*TPS65982 - Page B - 41*	*P750DM BOT LED Board - Page B - 65*
Lynix Point 2/7 - Page B - 18	*Cardreader RTS5250 - Page B - 42*	*P750DM LID Switch Board - Page B - 66*
Lynix Point 3/7 - Page B - 19	*TPM SLB9655TT & NPCT420 - Page B - 43*	*P750DM Charge LED Board - Page B - 67*
Lynix Point 4/7 - Page B - 20	*VCCIO / 1P0A - Page B - 44*	*P775DM Charge LED Board - Page B - 68*
Lynix Point 5/7 - Page B - 21	*DDR 1.2V/0.6VS/VCCPLL_OC - Page B - 45*	*P775DM Power LED Board - Page B - 69*
Lynix Point 6/7 - Page B - 22	*VDD3, VDD5 - Page B - 46*	*Power On Sequence - Page B - 70*
Lynix Point 7/7 - Page B - 23	*5V/5VS, 3V/3.3VS, 3.3VA - Page B - 47*	
USB Charging - Page B - 24	*5VS_2/2.5V/NV3V3/3.3V_ON/5V_RUN - Page B - 48*	
CCD, USB Port3 - Page B - 25	*Fan CPU, VGA Power - Page B - 49*	

Table B - 1
Schematic Diagrams

Version Note

The schematic diagrams in this chapter are based upon version 6-7P-P77FB-002. If your mainboard (or other boards) are a later version, please check with the Service Center for updated diagrams (if required).

Block Diagram

Sheet 1 of 69
Block Diagram

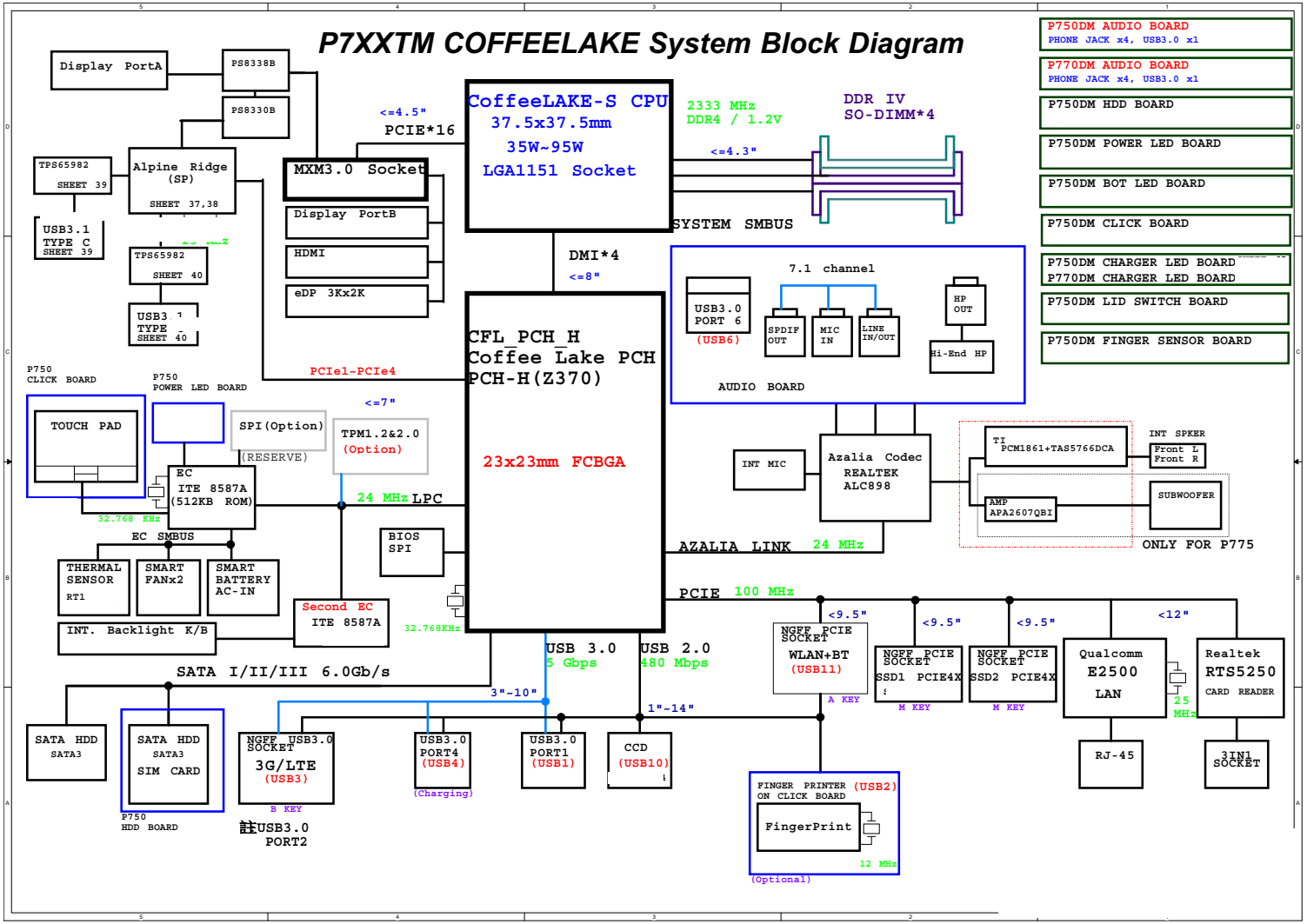

Processor 1/5

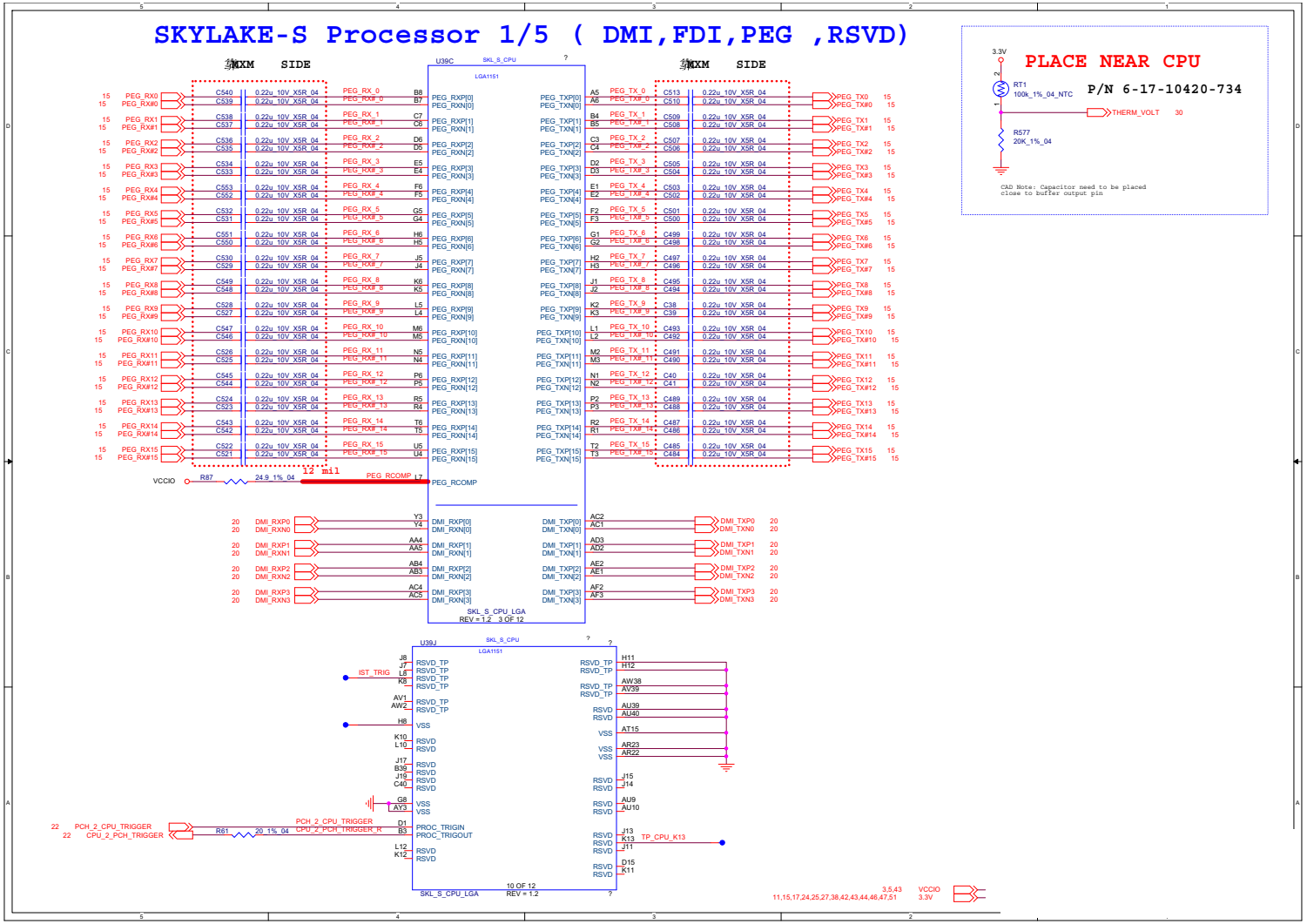

Sheet 2 of 69
Processor 1/5

Processor 2/5

Sheet 3 of 69
Processor 2/5

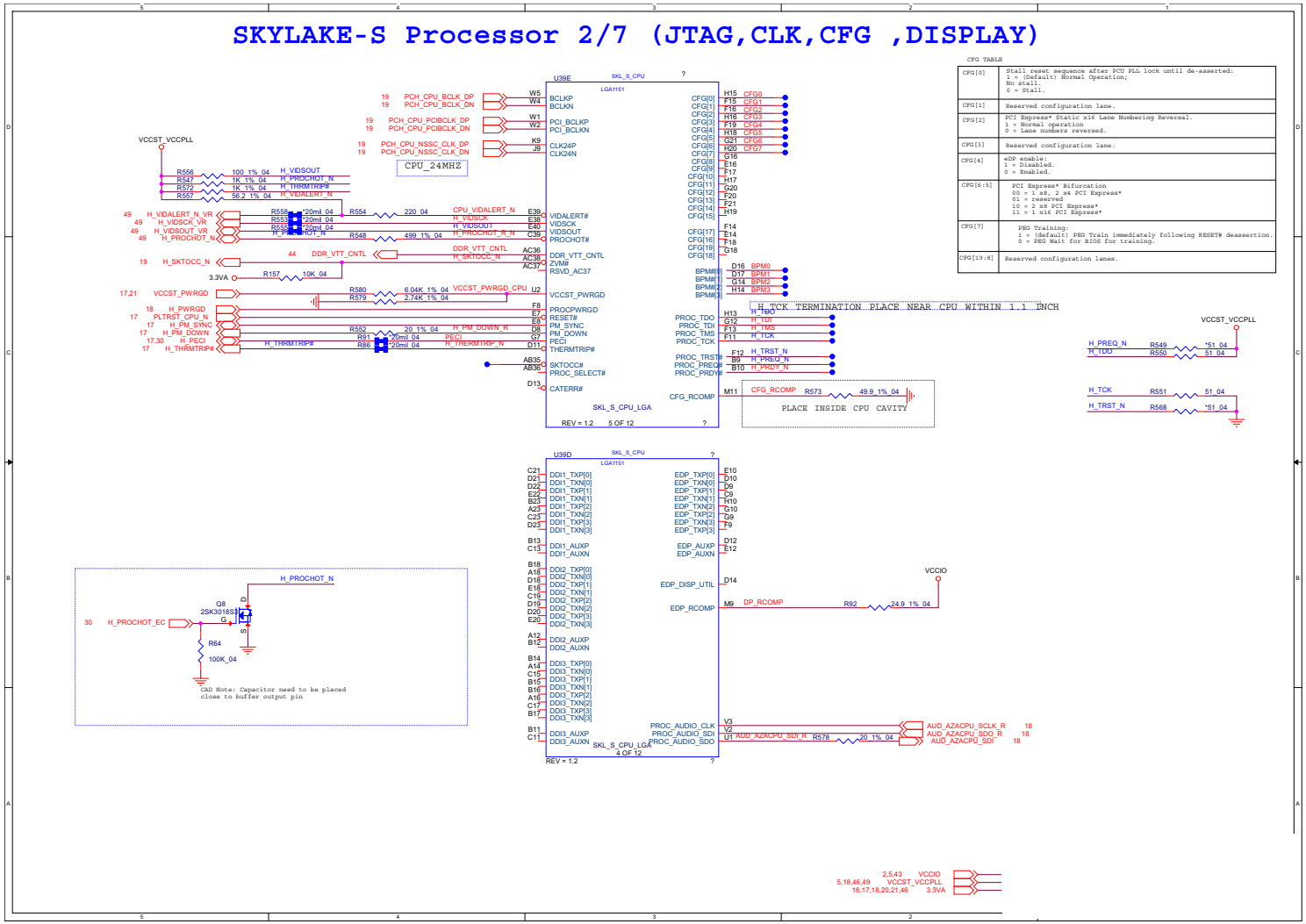

Processor 3/5

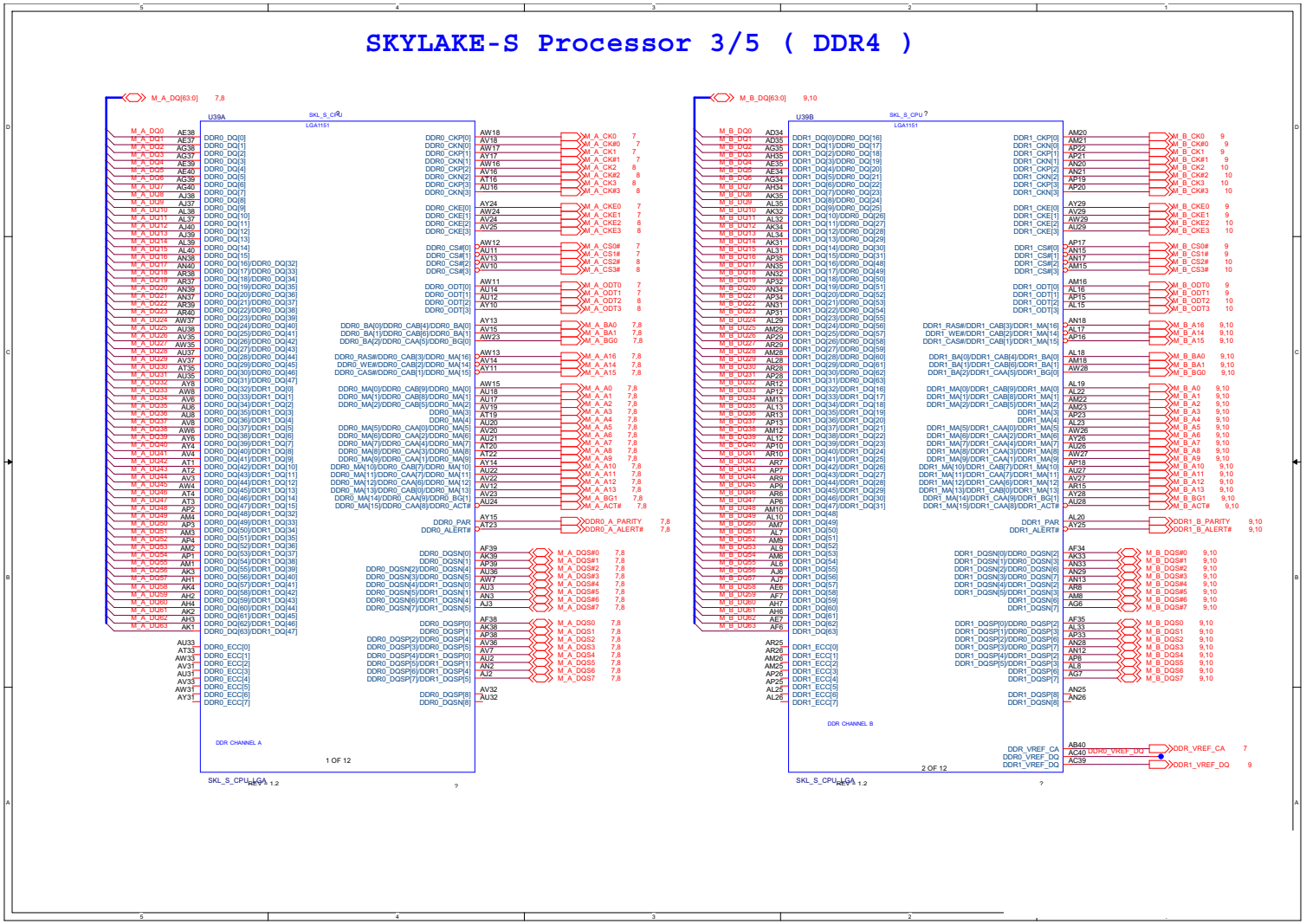

Sheet 4 of 69
Processor 3/5

Processor 4/5

Sheet 5 of 69
Processor 4/5

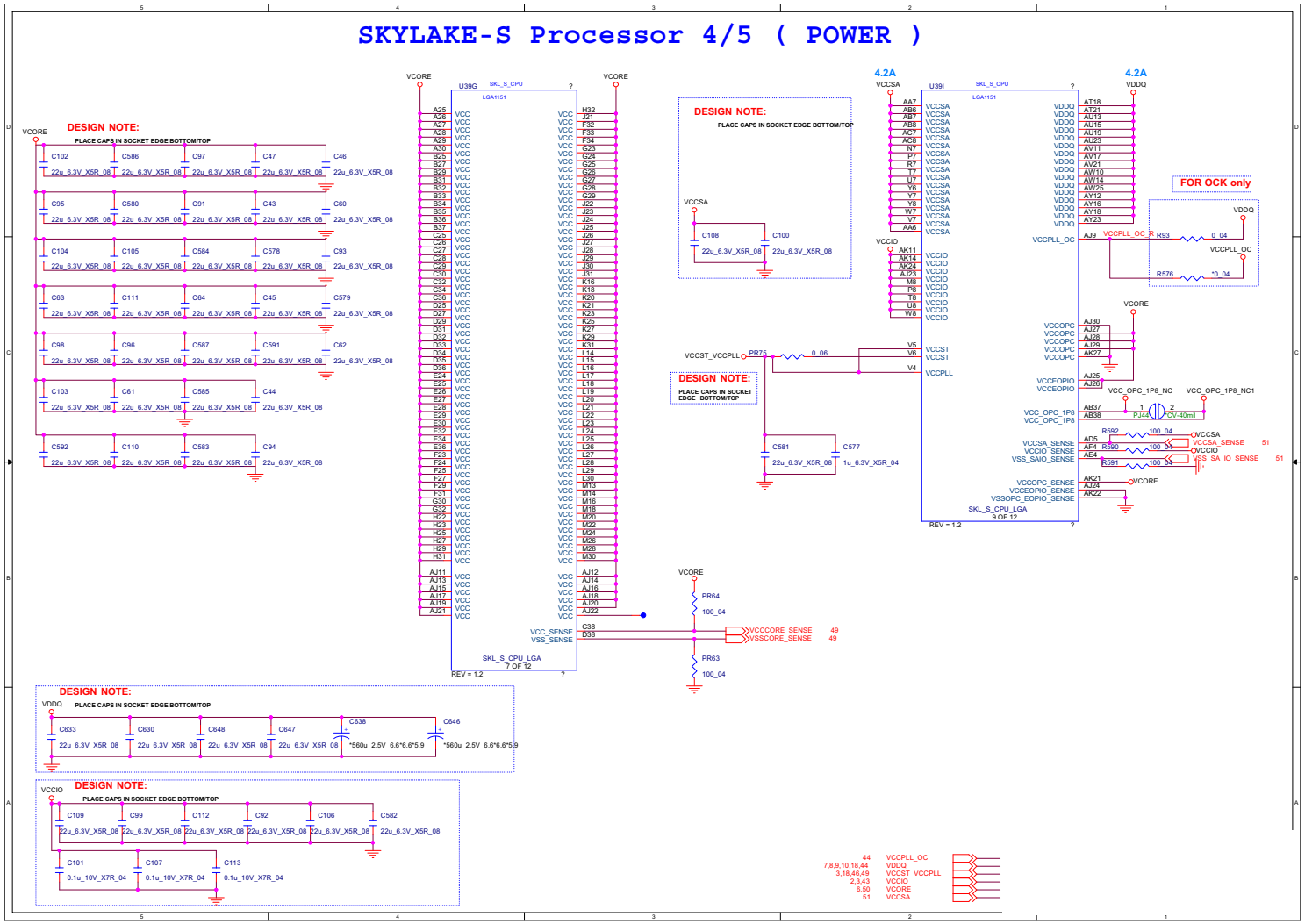

Processor 5/5

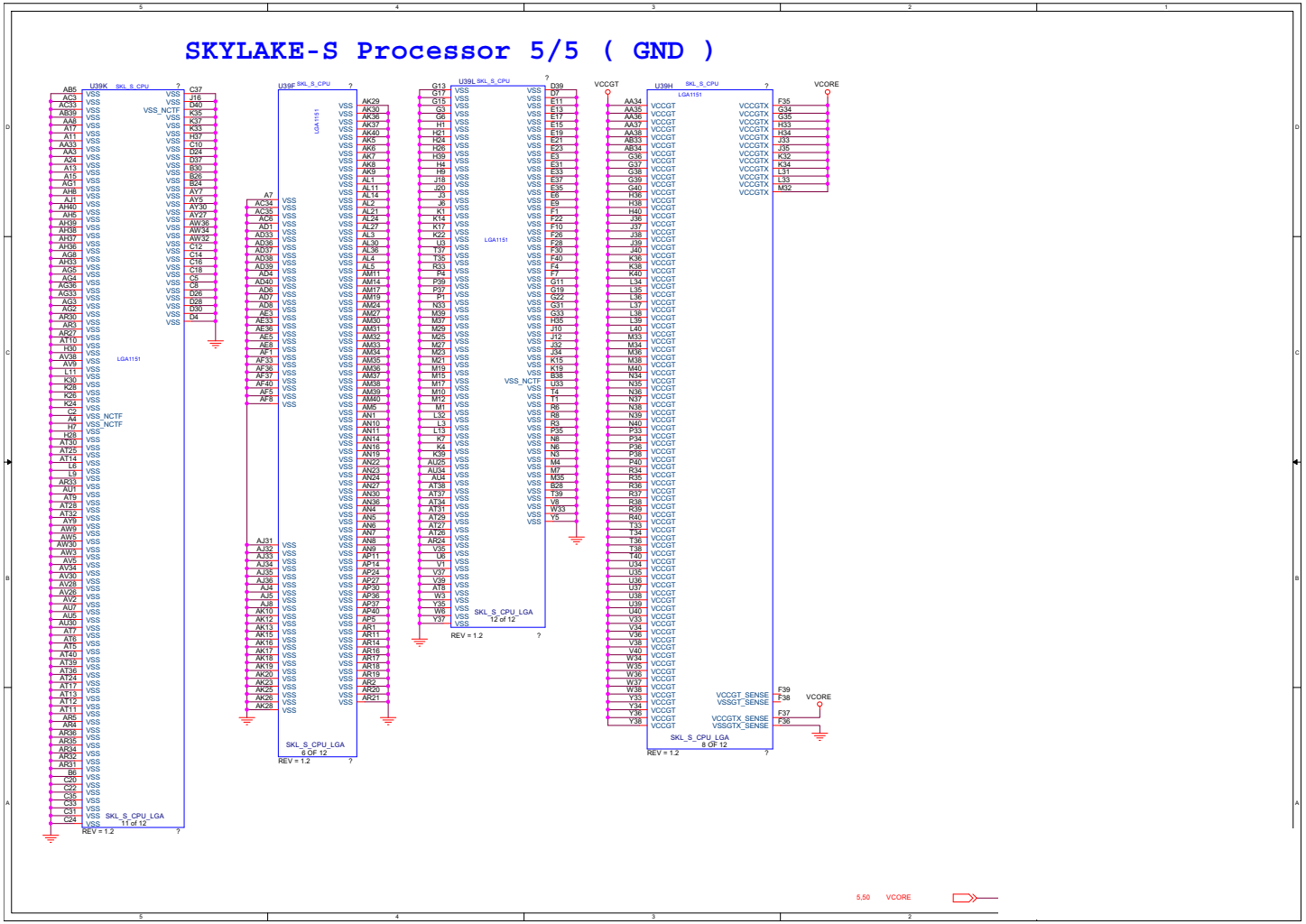

Sheet 6 of 69
Processor 5/5

B.Schematic Diagrams

DDR4 CHA SO-DIMM_0

Sheet 7 of 69
DDR4 CHA SO-DIMM _0

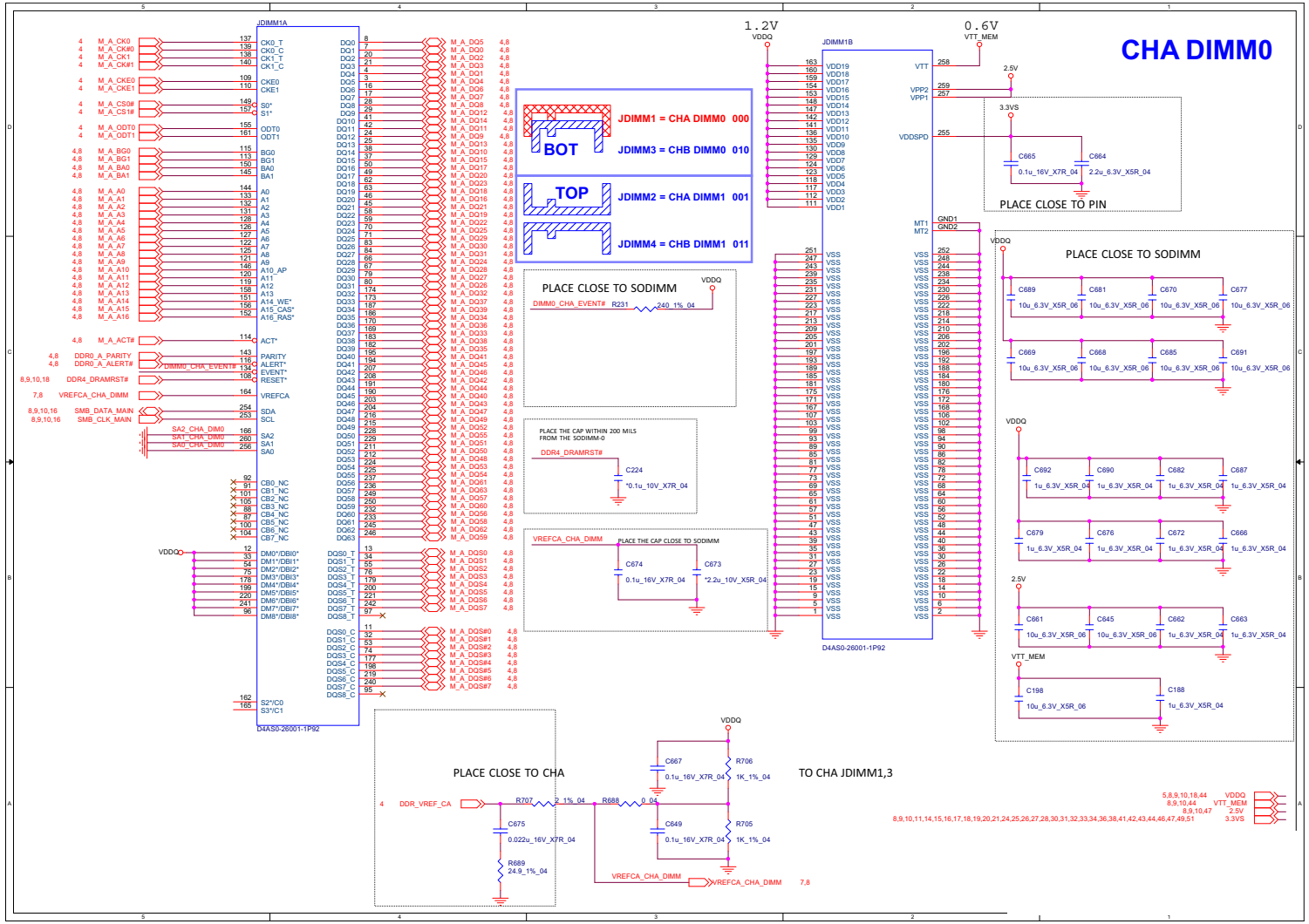

DDR4 CHA SO-DIMM_1

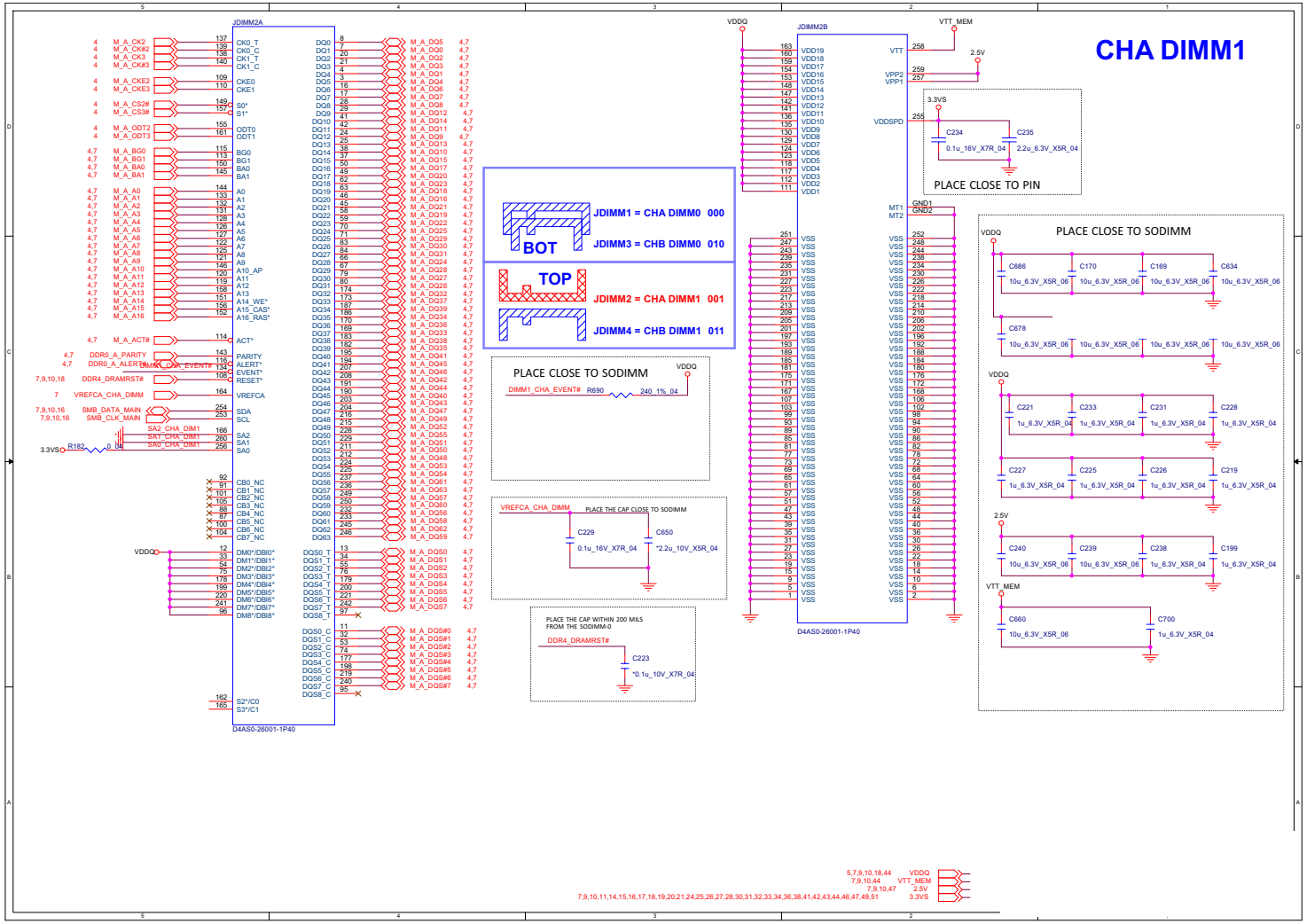

Sheet 8 of 69
DDR4 CHA SO-DIMM _1

DDR4 CHB SO-DIMM_0

Sheet 9 of 69
DDR4 CHB SO-DIMM _0

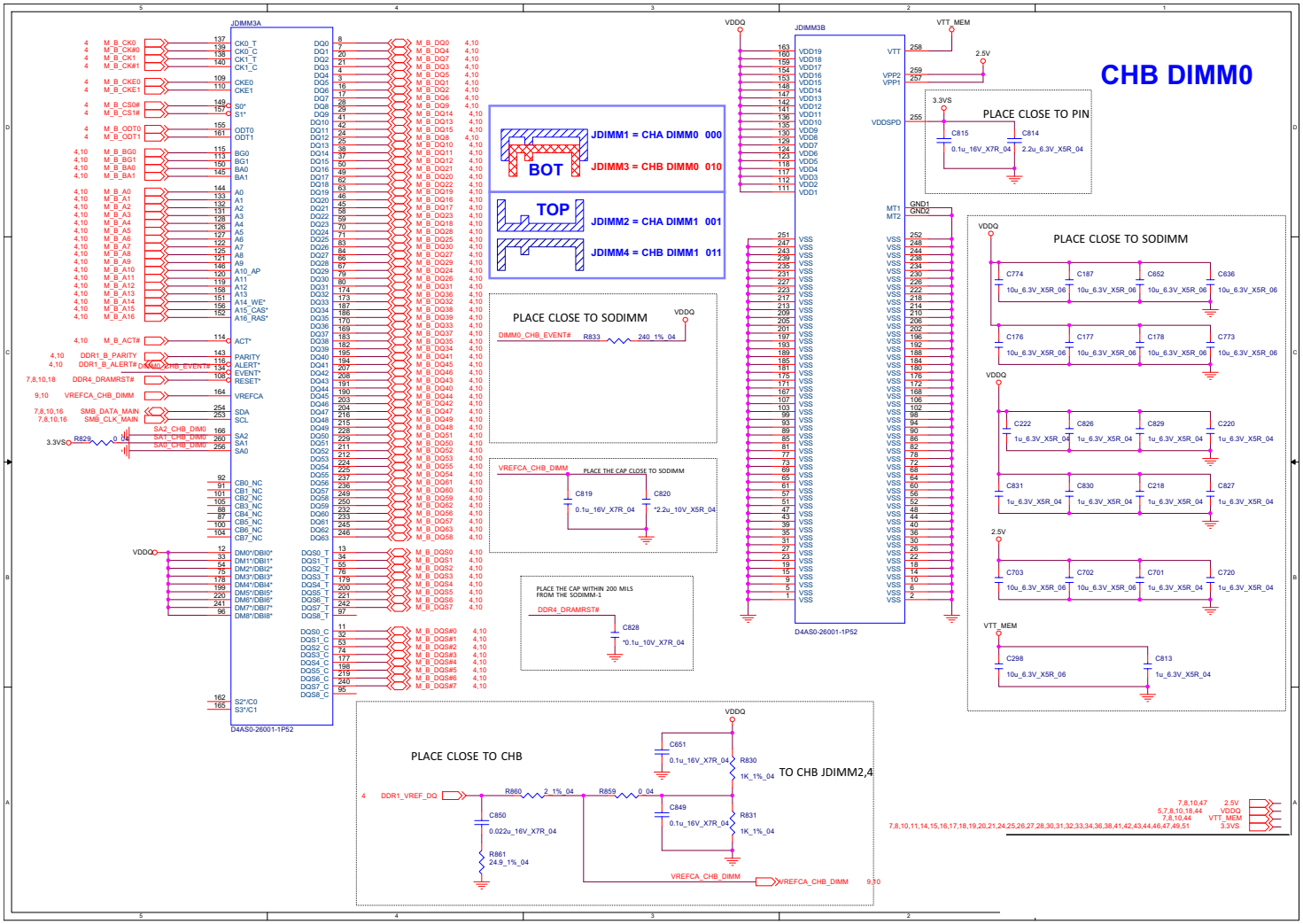

DDR4 CHB SO-DIMM_1

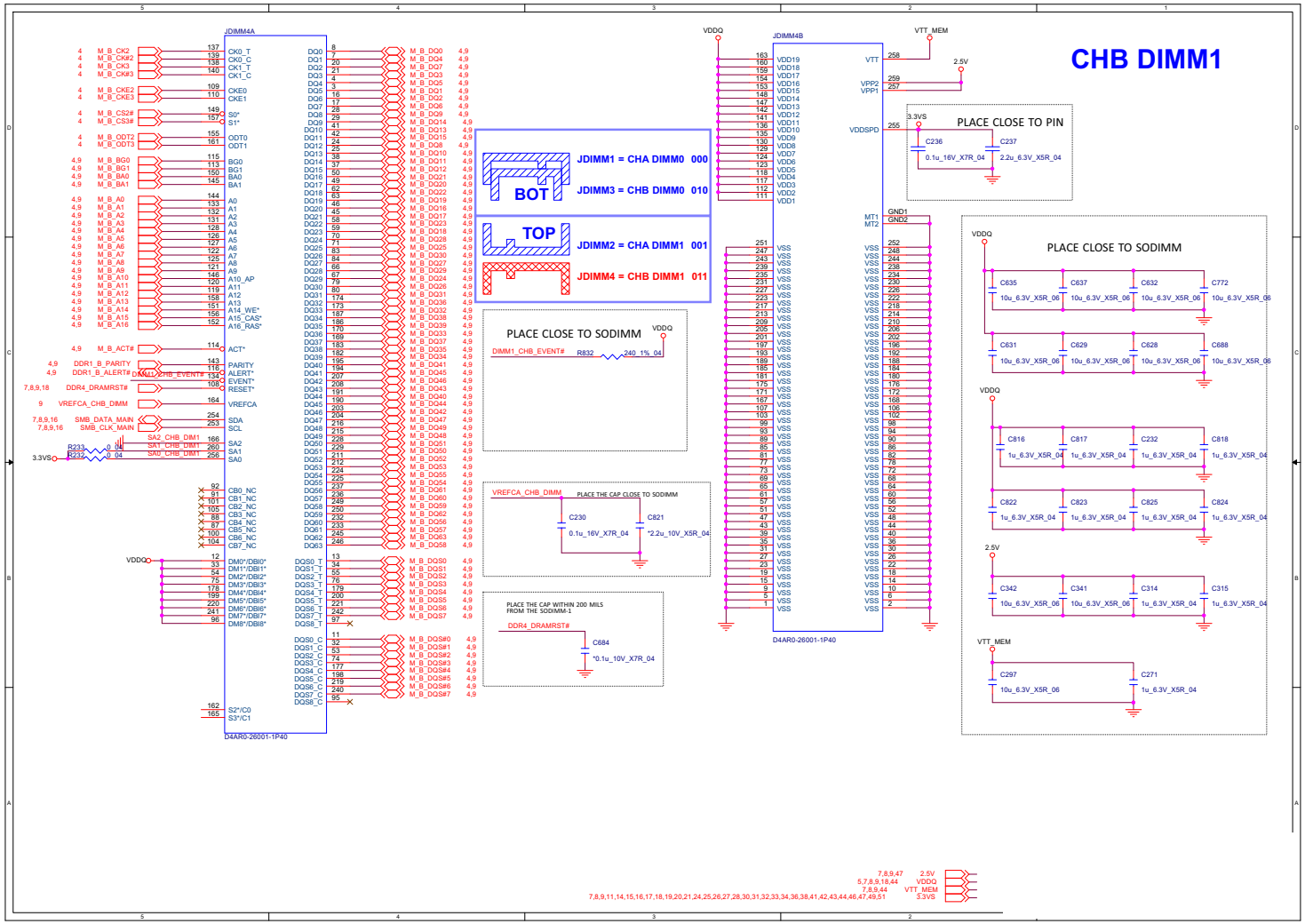

Sheet 10 of 69
DDR4 CHB SO-DIMM _1

B.Schematic Diagrams

Panel, Inverter, CRT

Sheet 11 of 69
Panel, Inverter, CRT

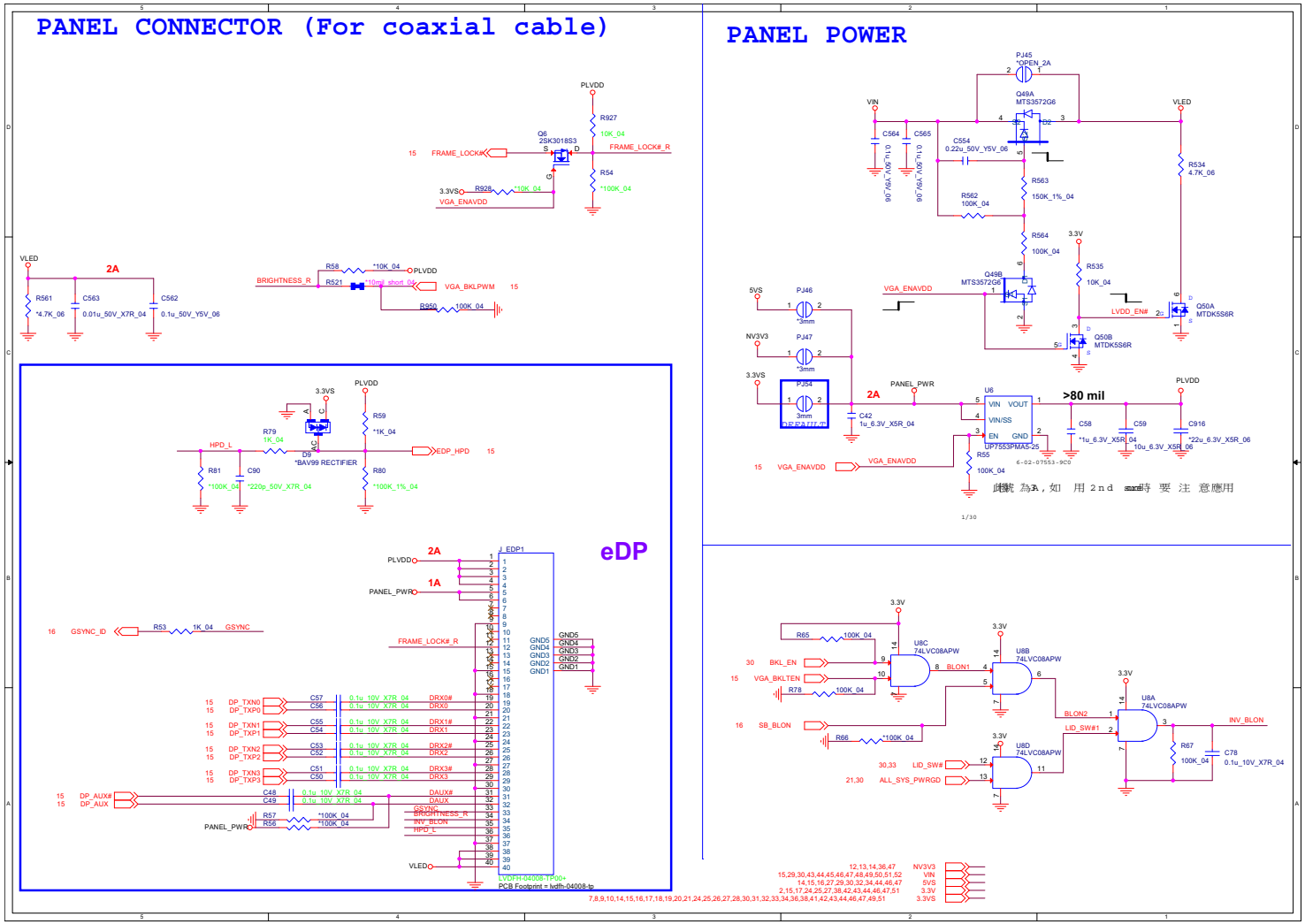

Display Port A

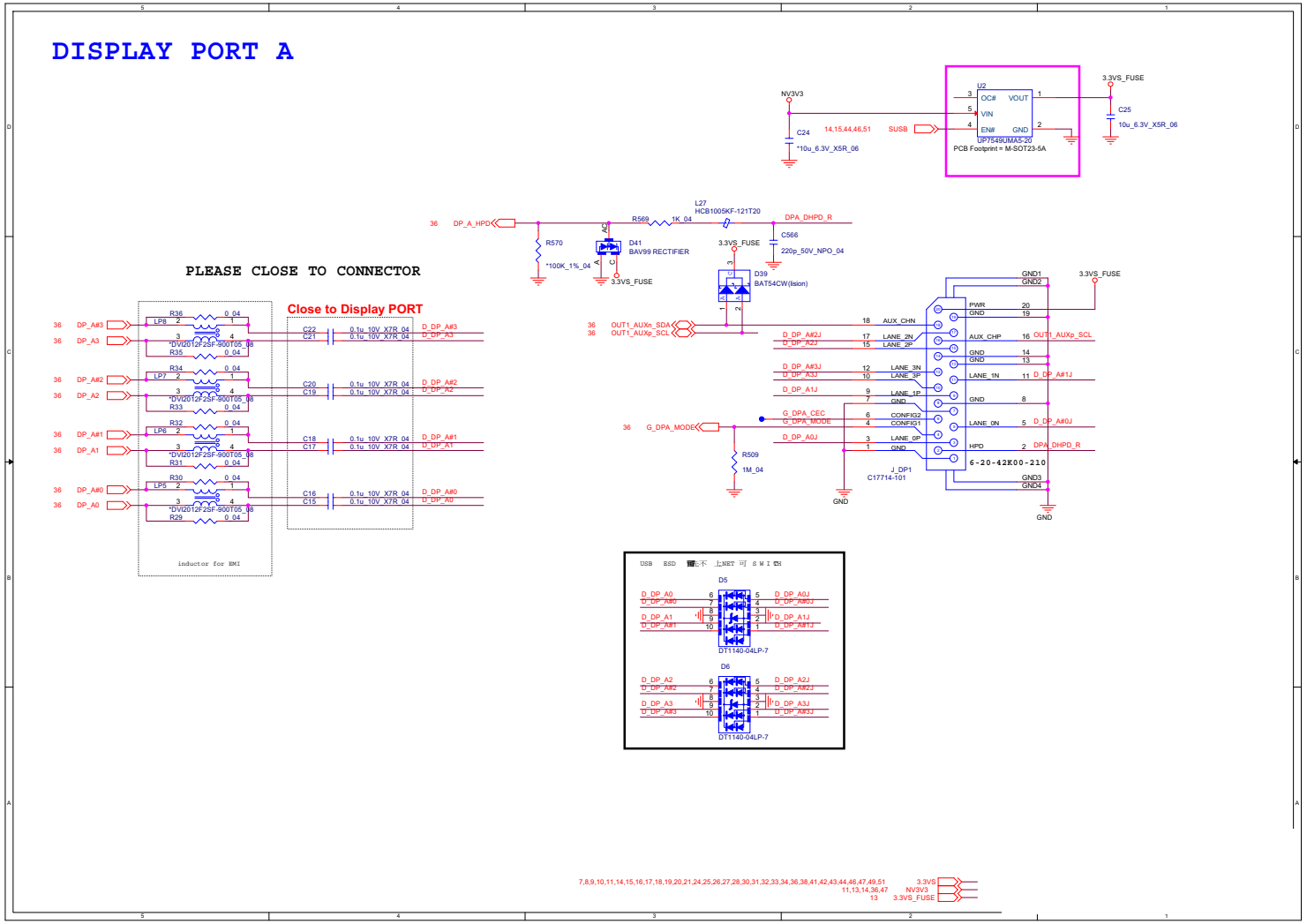

Sheet 12 of 69
Display Port A

Display Port B

Sheet 13 of 69
Display Port B

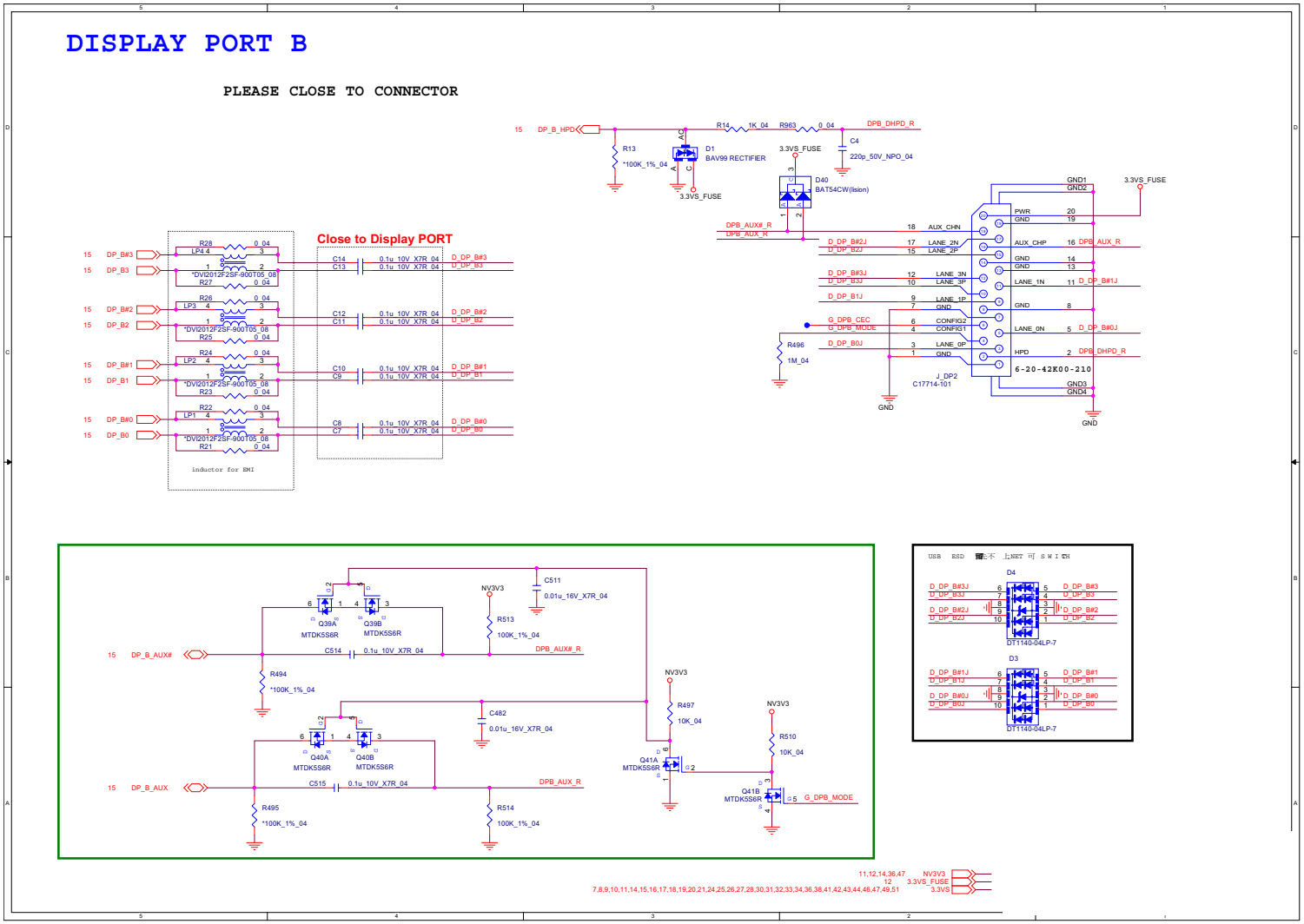

HDMI

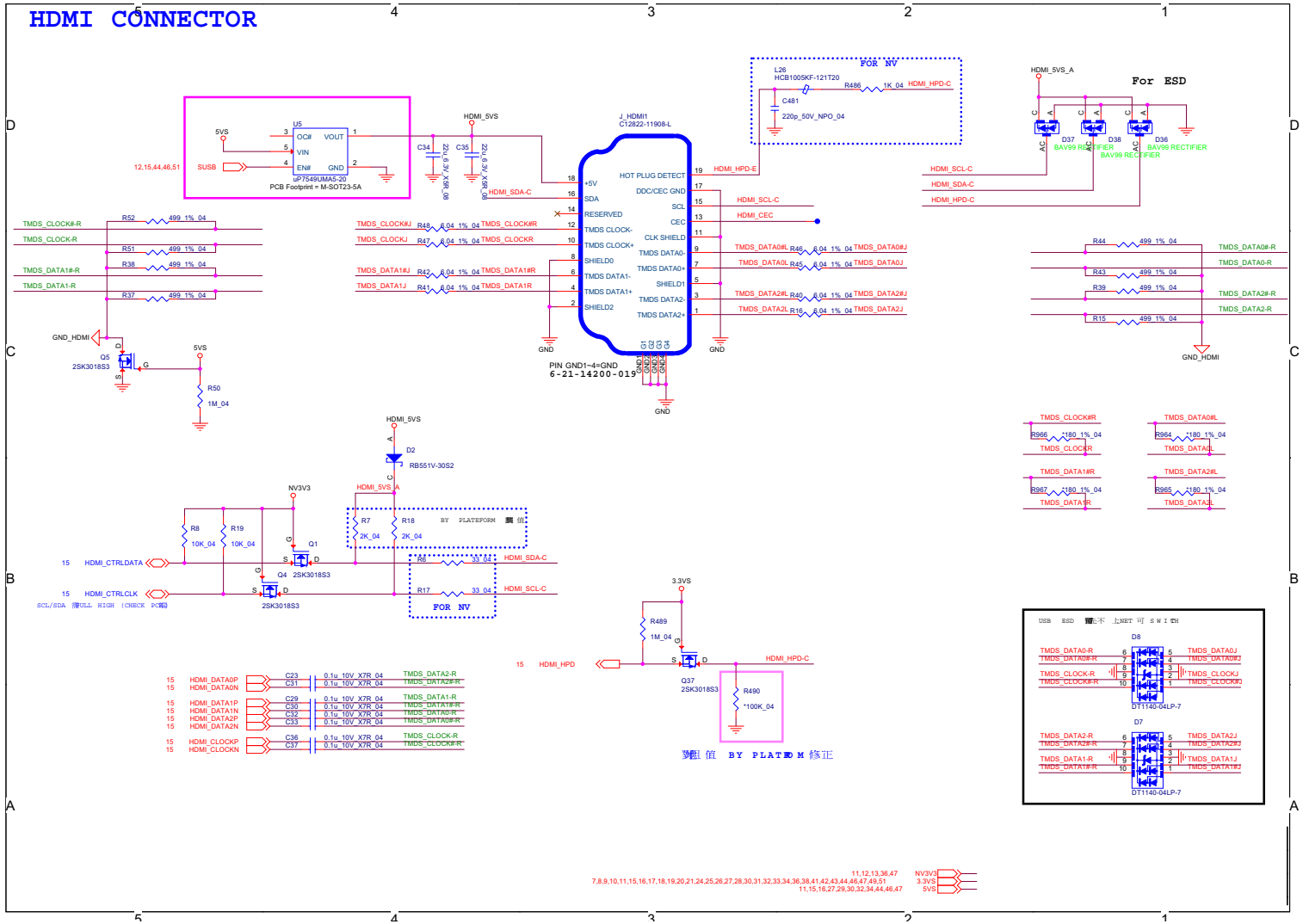

Sheet 14 of 69
HDMI

MXM PCI-E

Sheet 15 of 69
MXM PCI-e

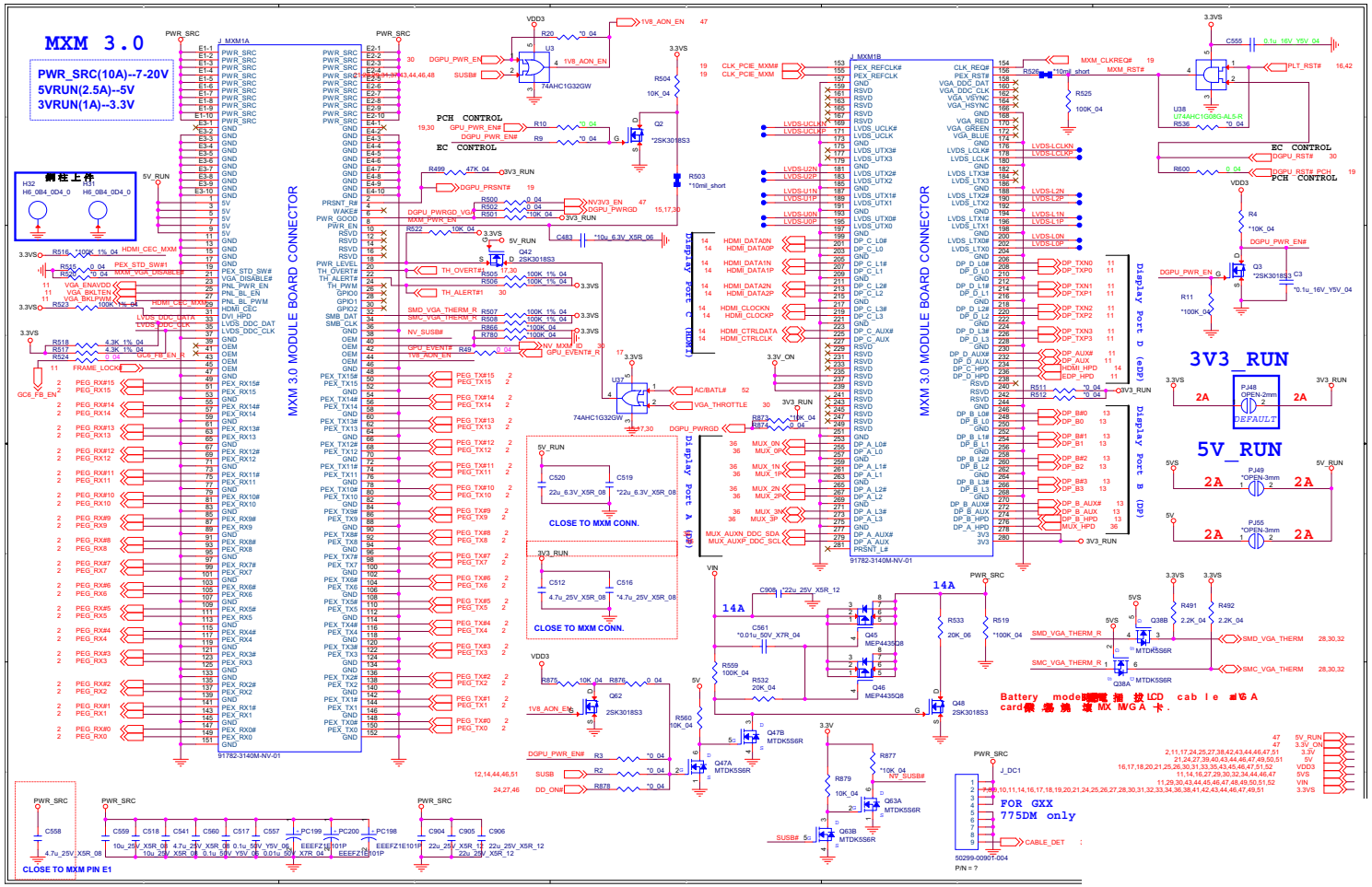

Lynix Point 1/7

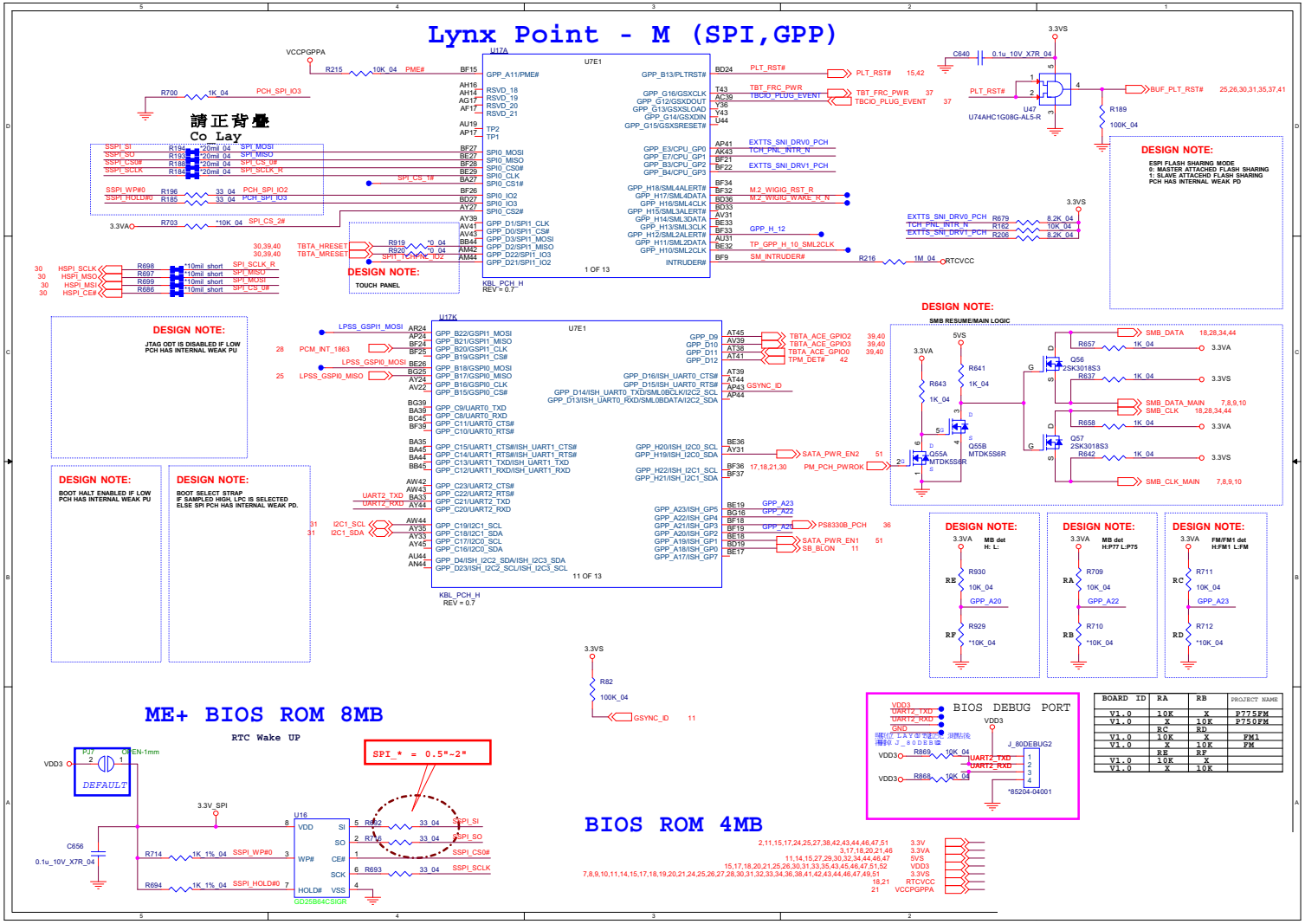

Sheet 16 of 69
Lynix Point 1/7

Lynix Point 2/7

Sheet 17 of 69
Lynix Point 2/7

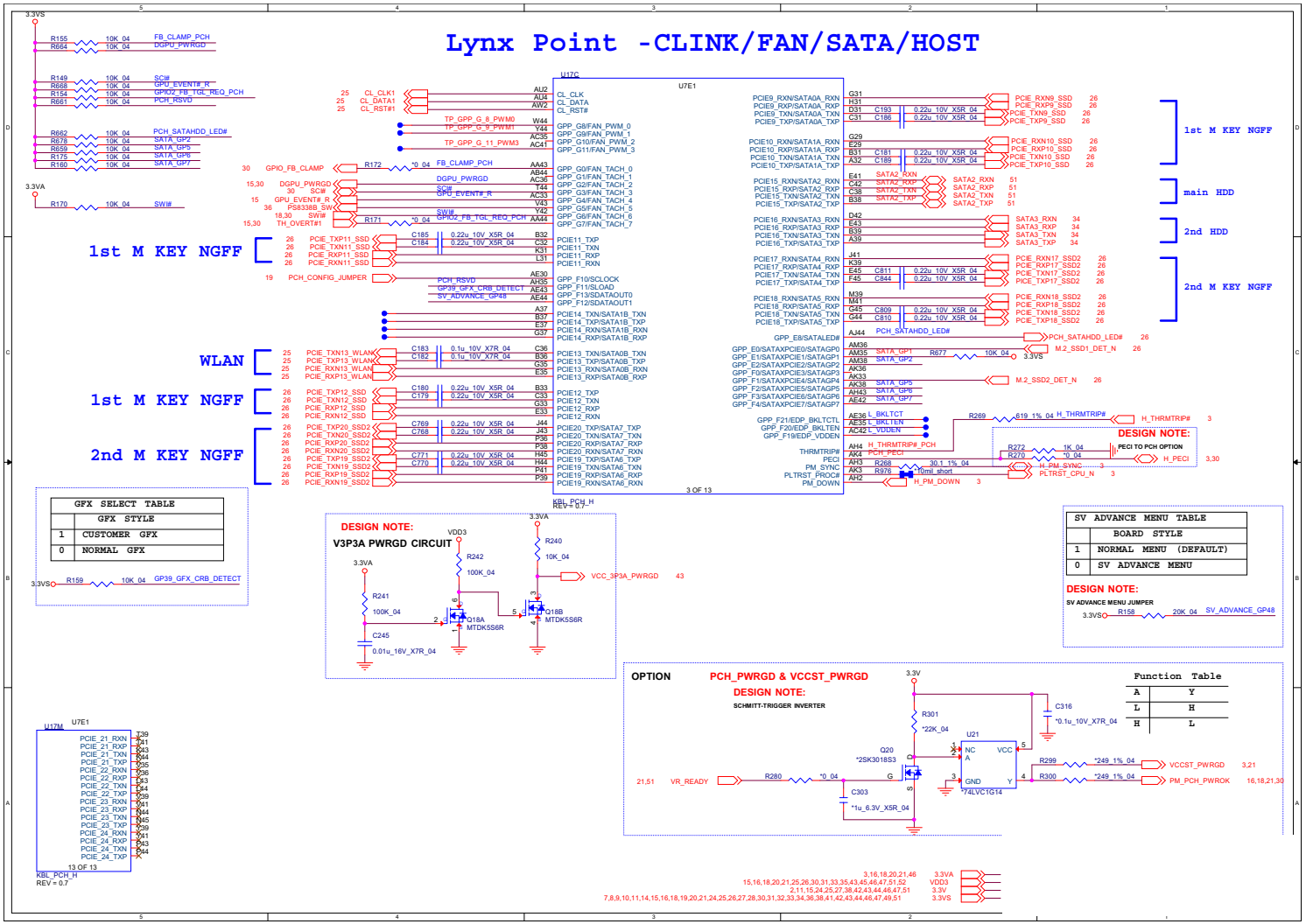

Lynix Point 3/7

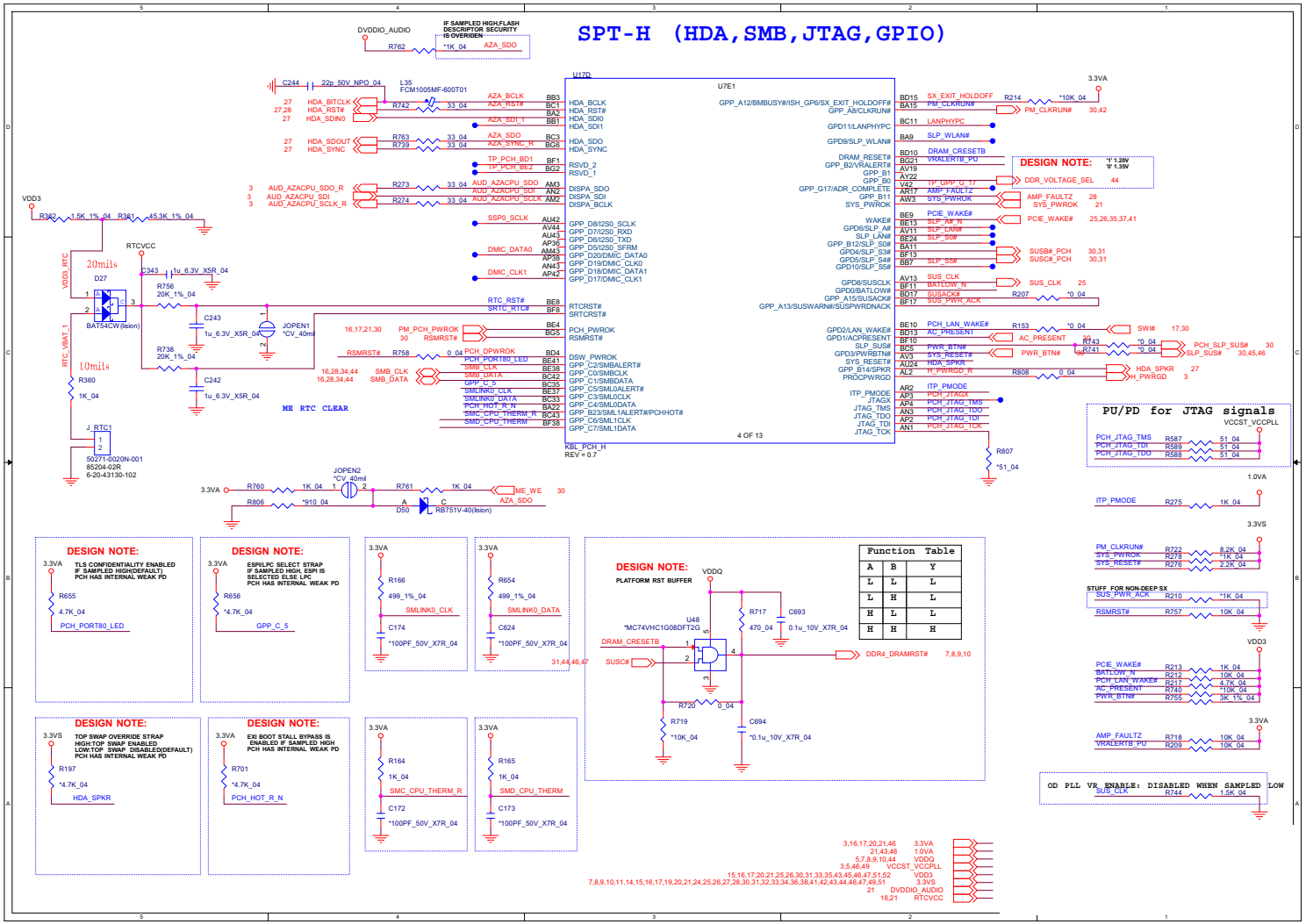

Sheet 18 of 69
Lynix Point 3/7

Lynix Point 4/7

Sheet 19 of 69
Lynix Point 4/7

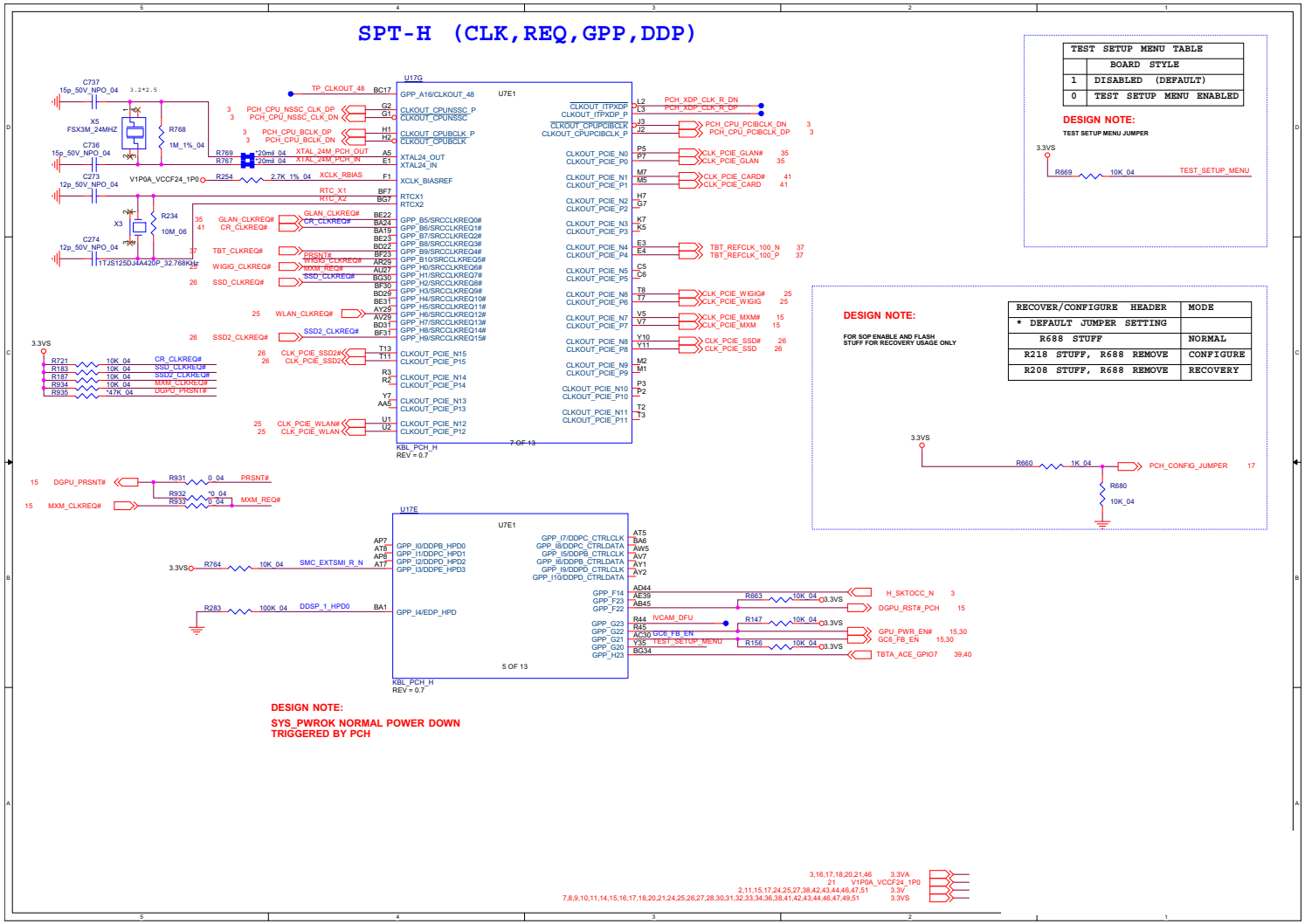

Lynix Point 5/7

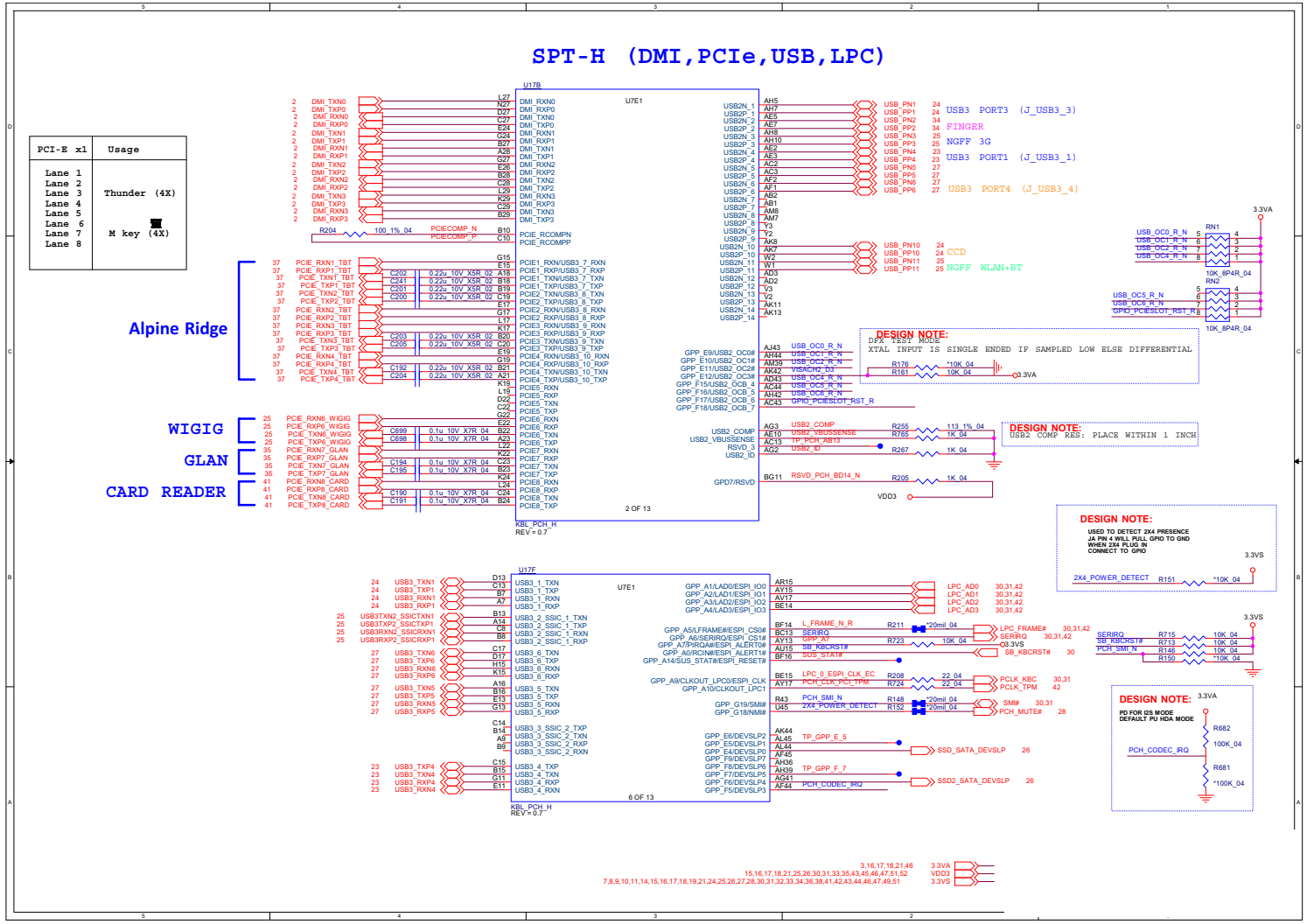

Sheet 20 of 69
Lynix Point 5/7

Lynix Point 6/7

Sheet 21 of 69
Lynix Point 6/7

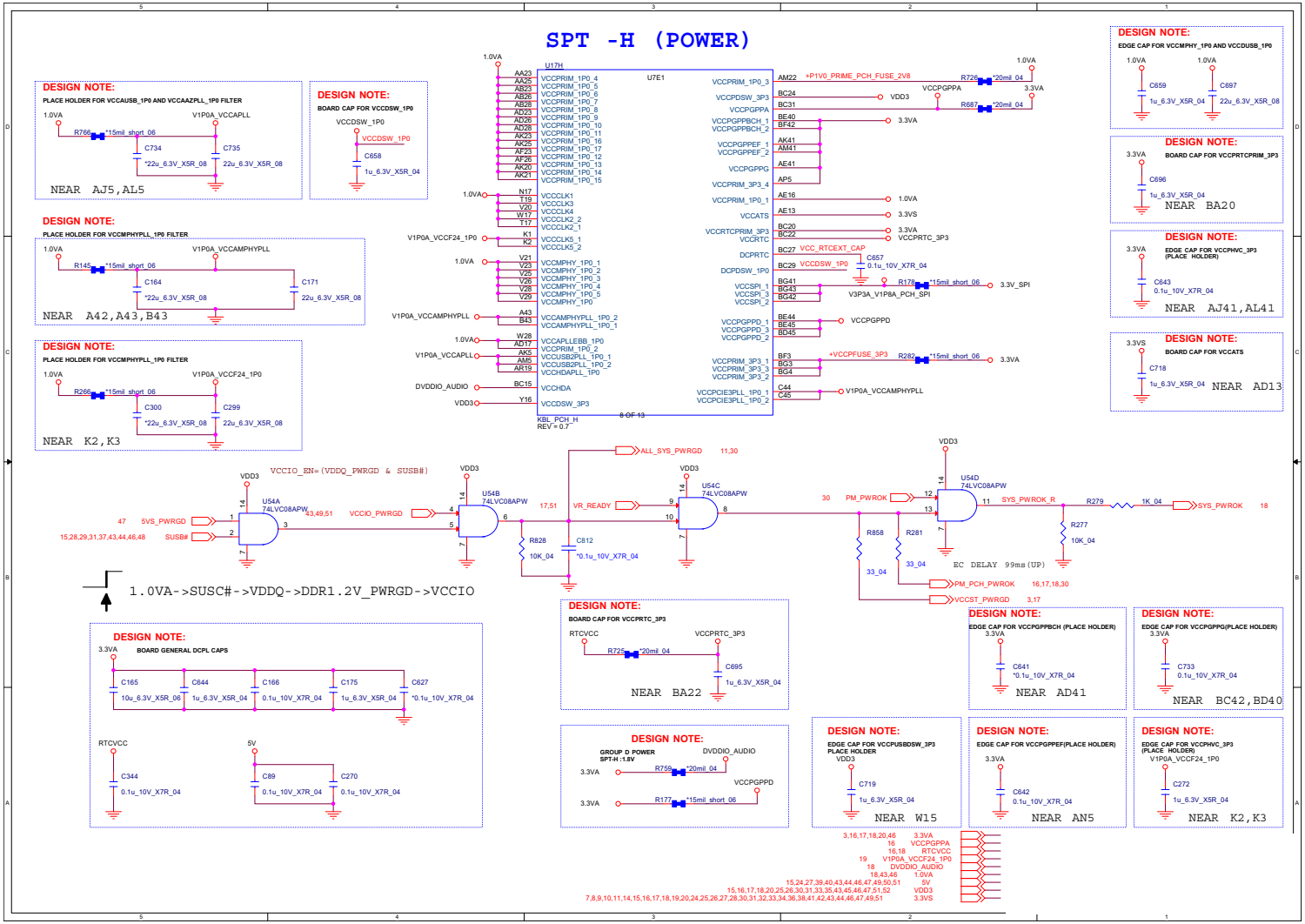

Lynix Point 7/7

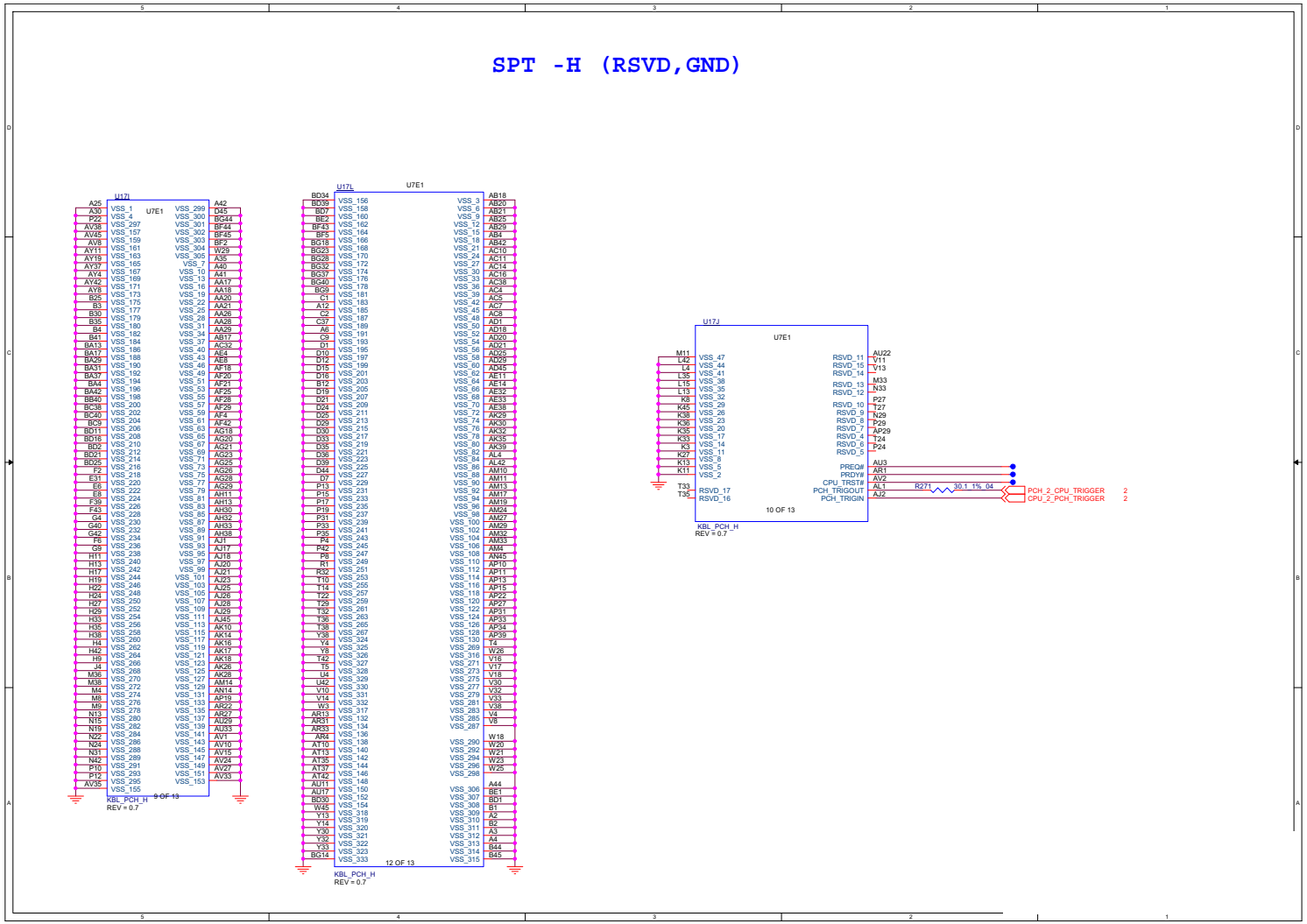

Sheet 22 of 69
Lynix Point 7/7

USB Charging

Sheet 23 of 69
USB Charging

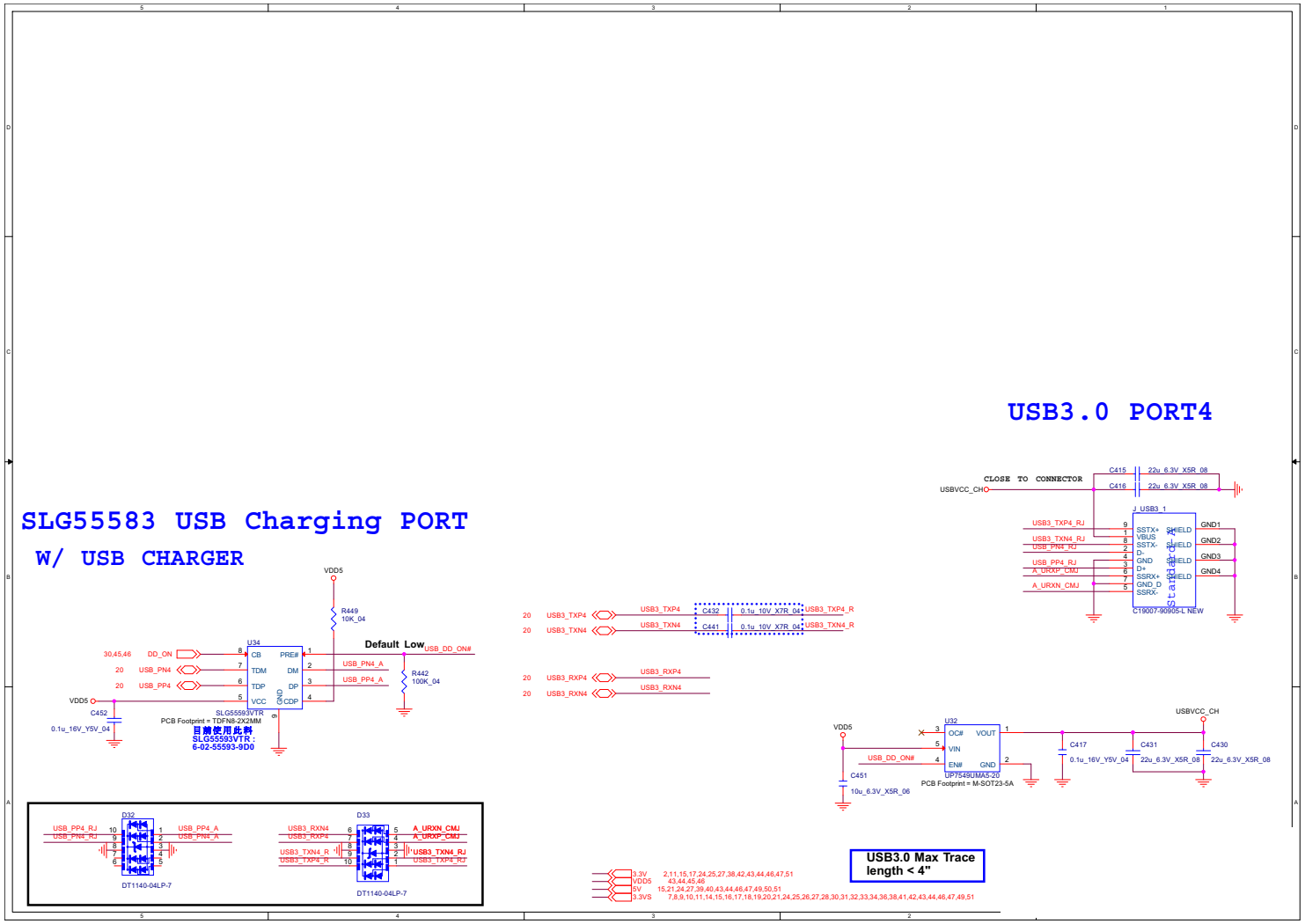

CCD, USB Port3

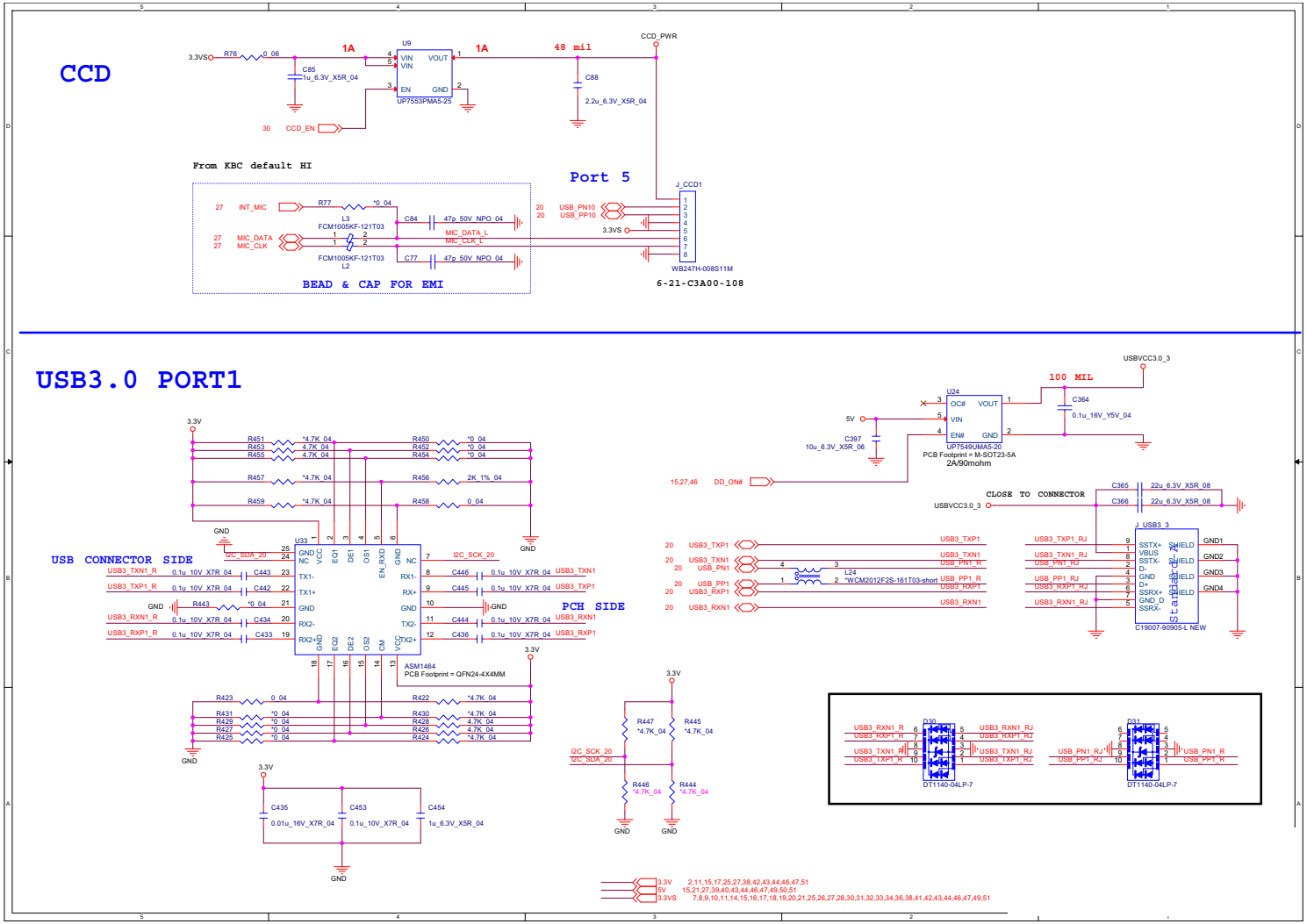

Sheet 24 of 69
CCD, USB Port3

M.2 3G+USB & WLAN+BT

Sheet 25 of 69
M.2 3G+USB & WLAN+BT

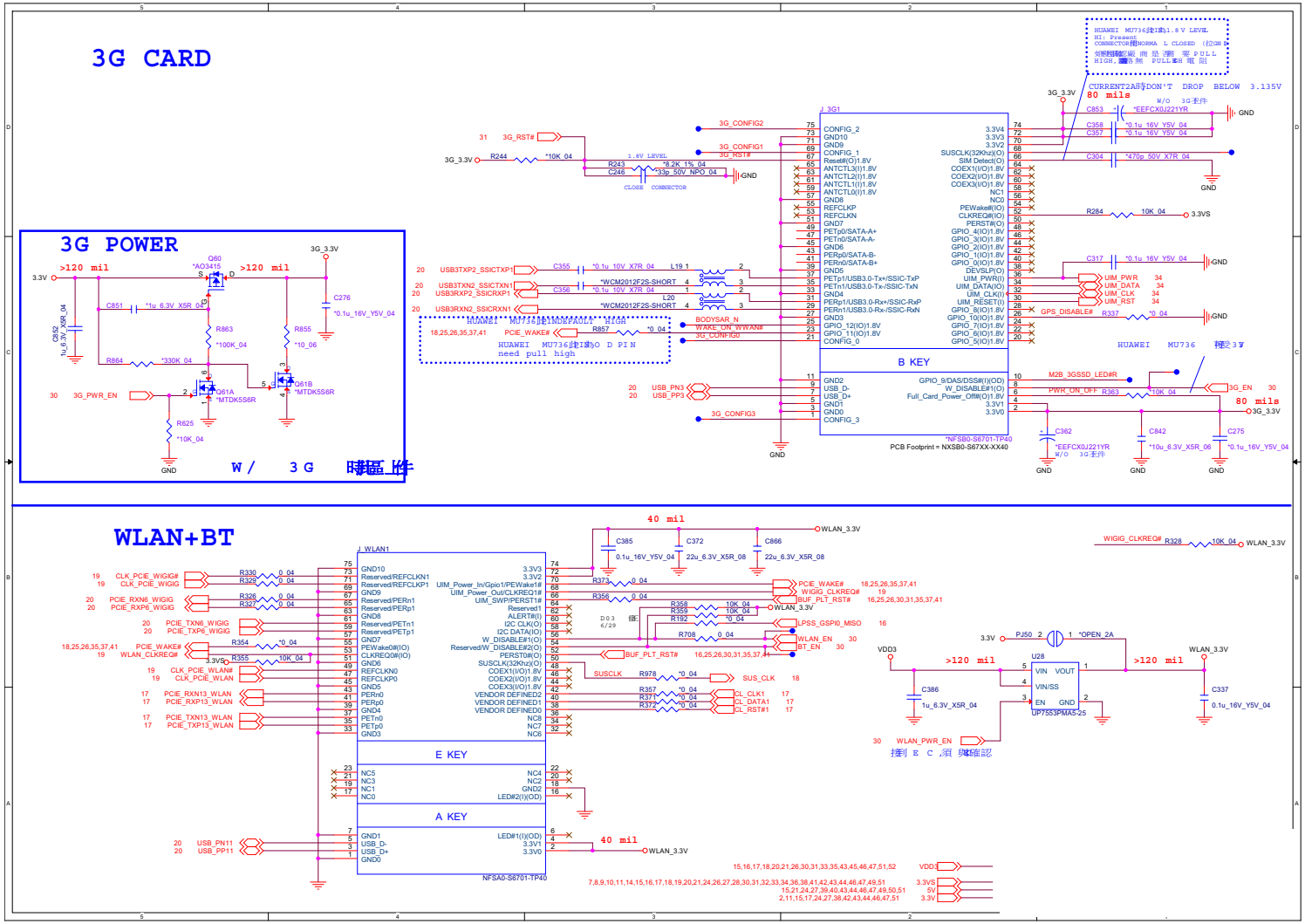

M.2 PCIE4X SSD1 & SSD2

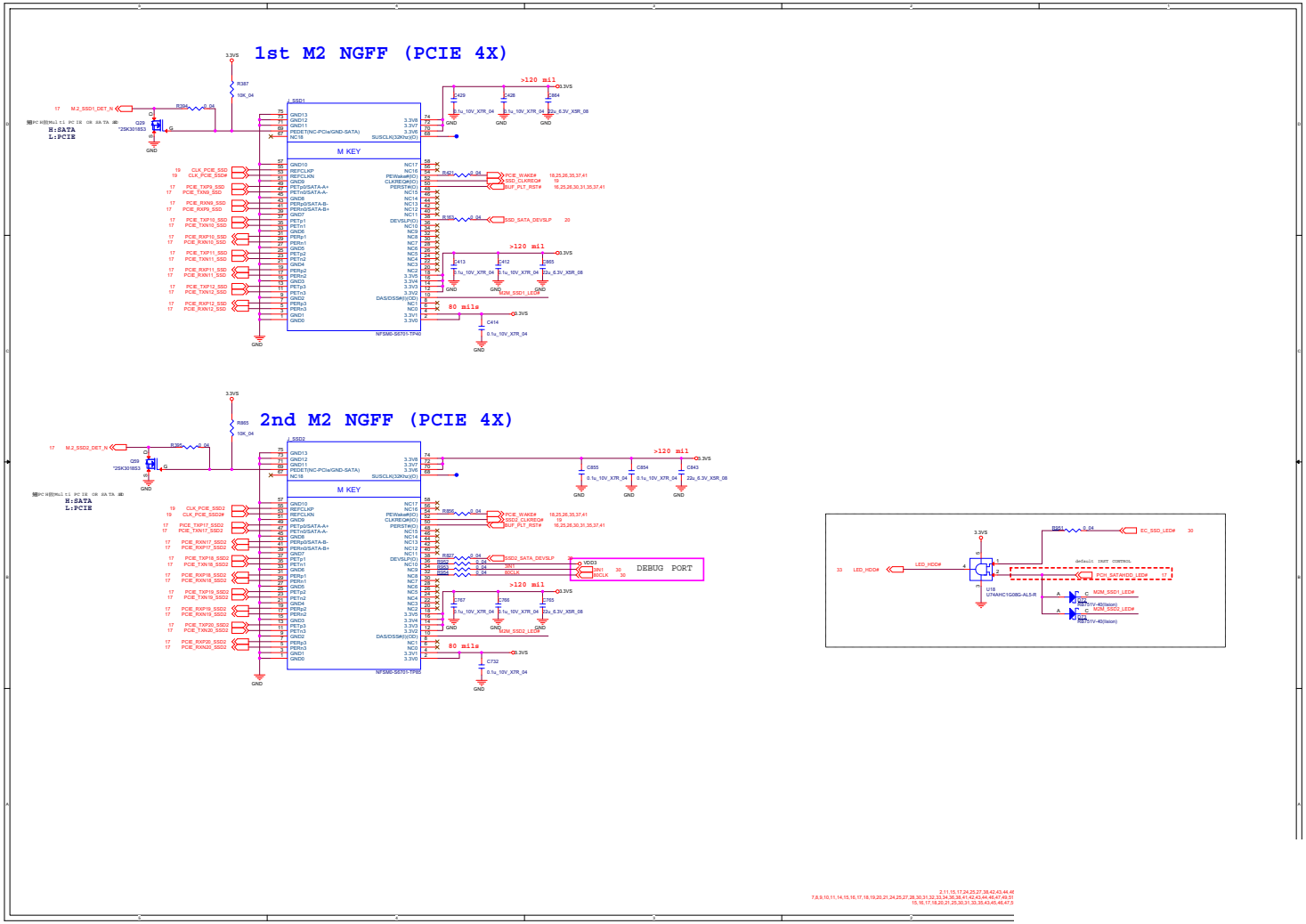

Sheet 26 of 69
M.2 PCIE4X SSD1 & SSD2

Realtek ALC898

Sheet 27 of 69
Realtek ALC898

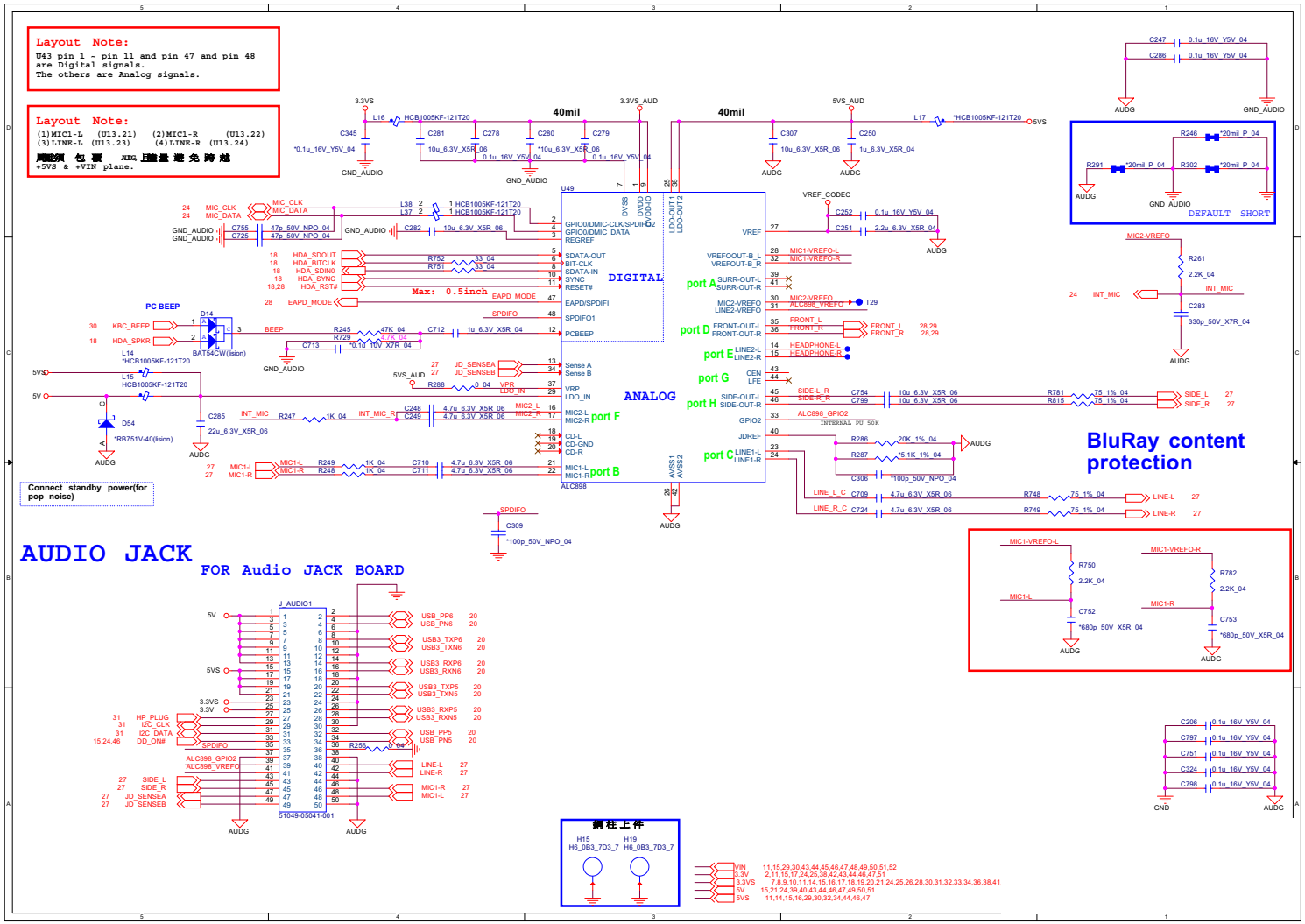

PCM1861 + TAS5766DCA

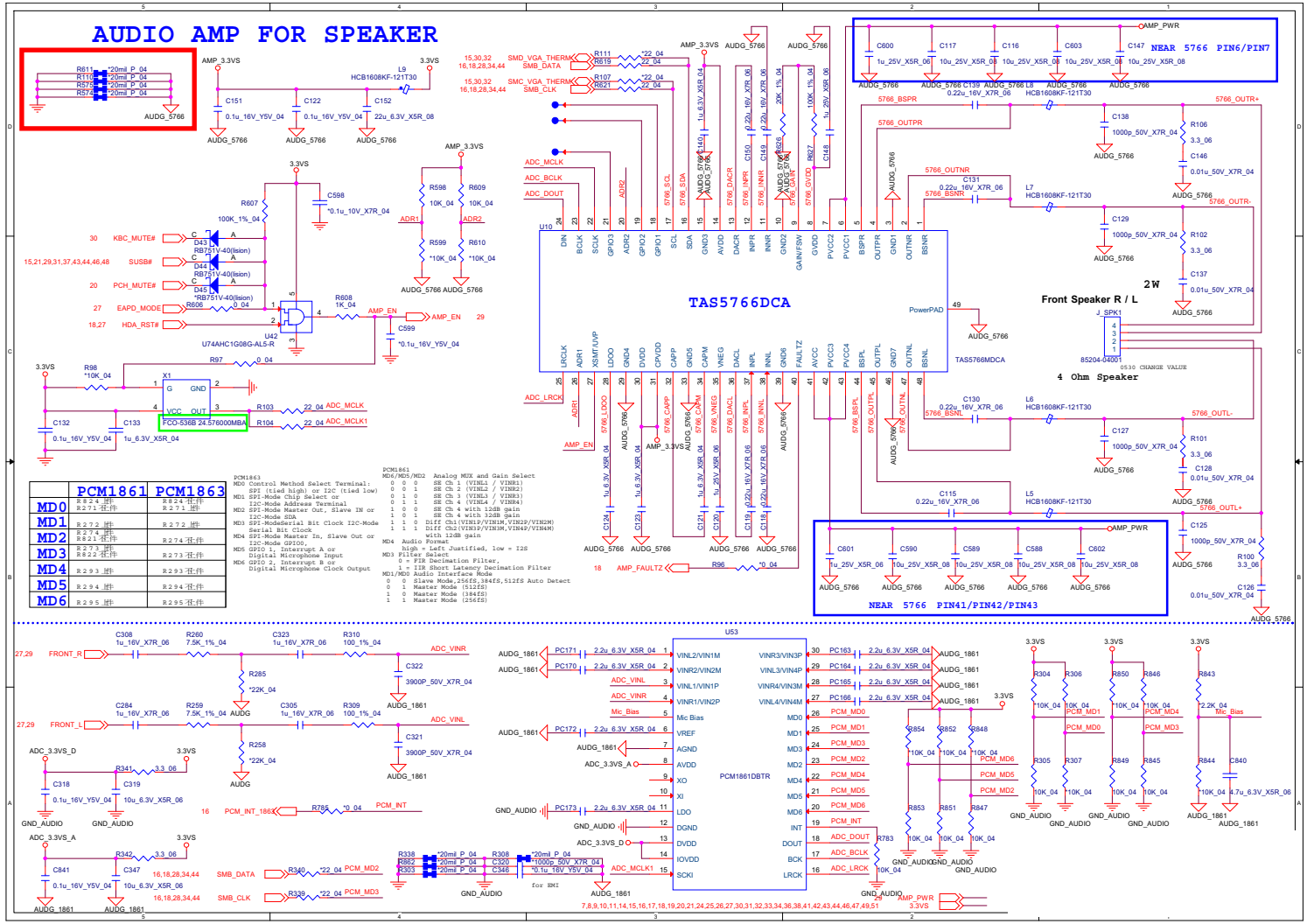

Sheet 28 of 69
PCM1861 +
TAS5766DCA

Subwoofer

Sheet 29 of 69
Subwoofer

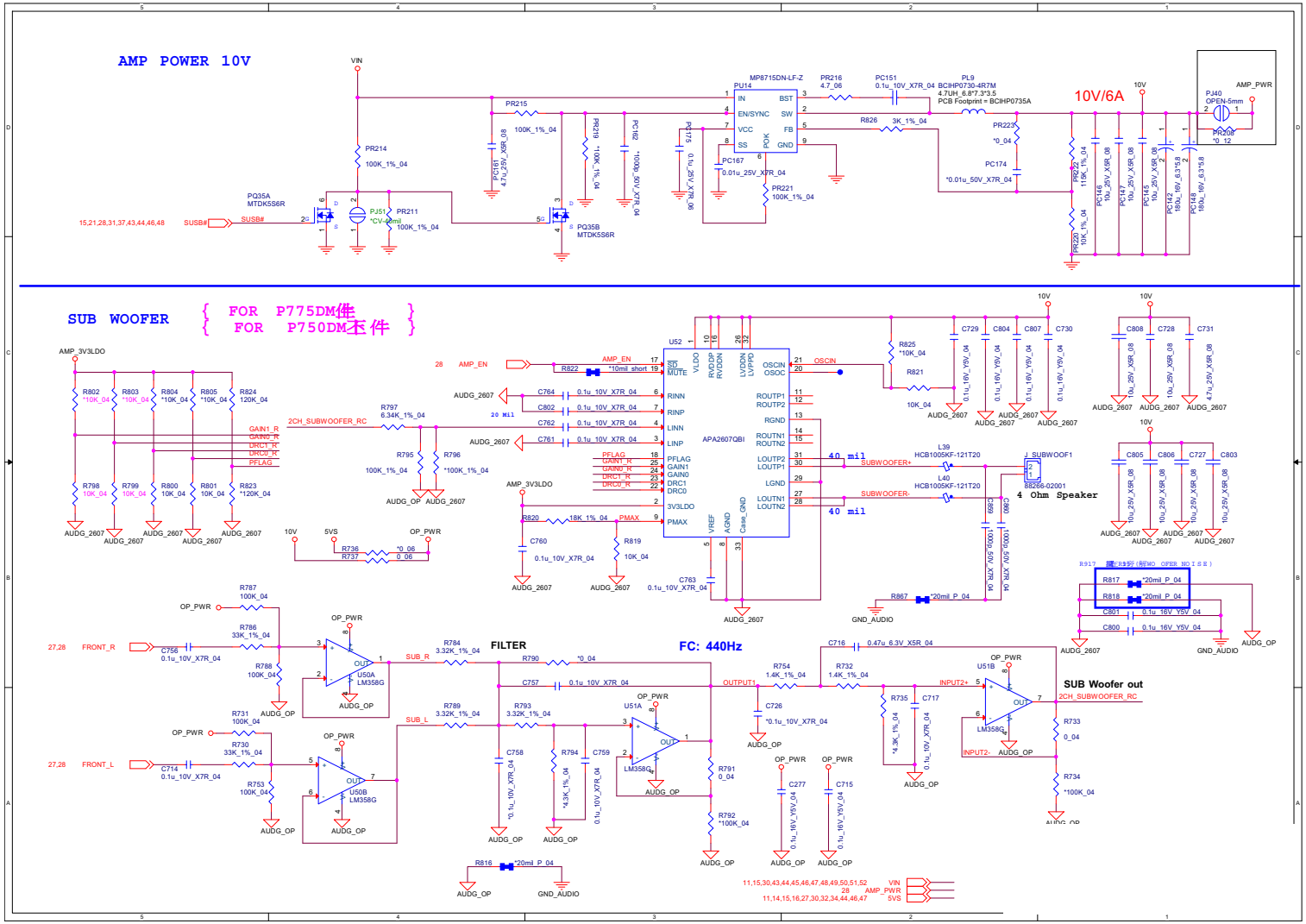

EC IT8587

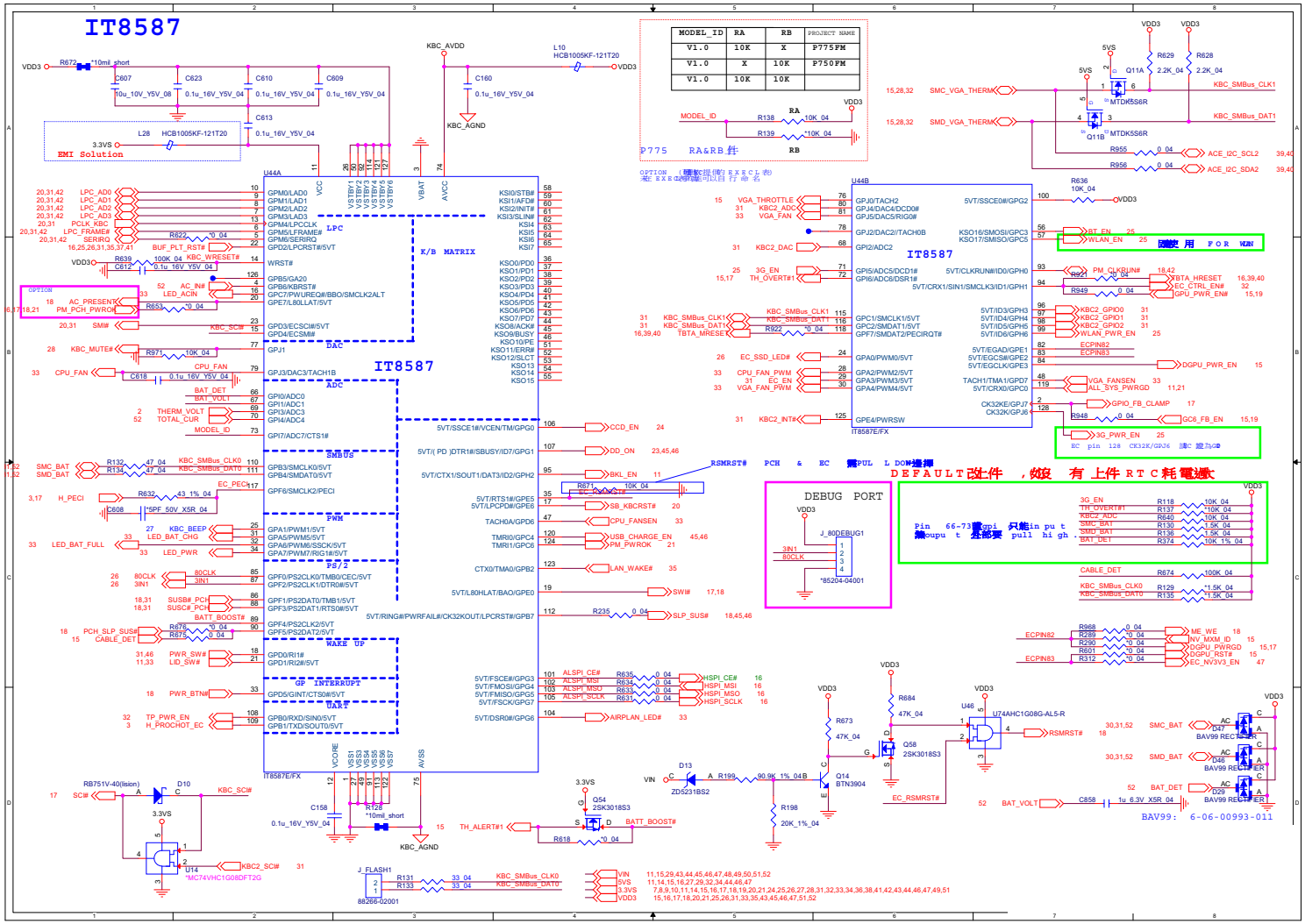

Sheet 30 of 69
EC IT8587

Second EC IT8587

Sheet 31 of 69
Second EC IT8587

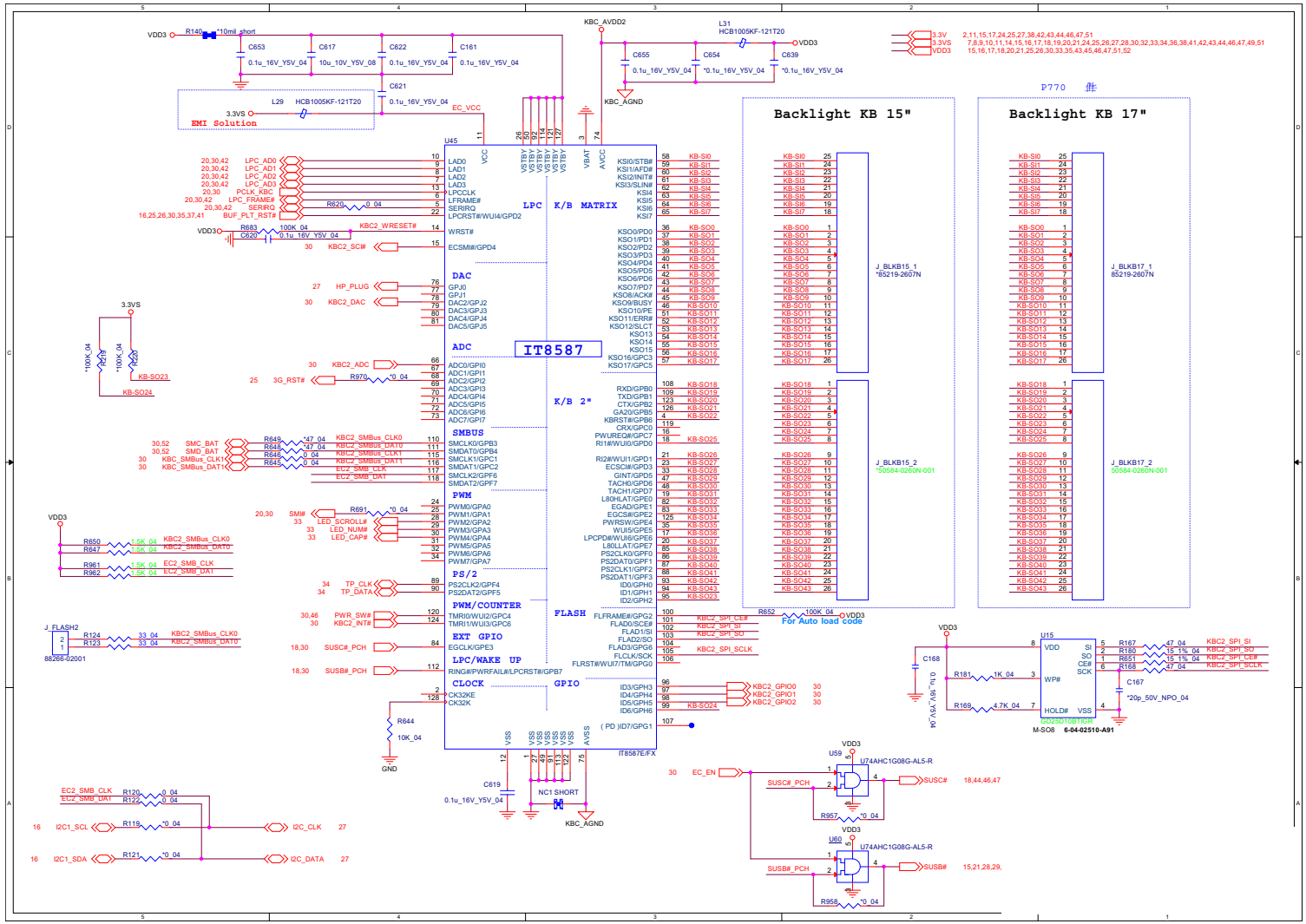

Backlight Keyboard

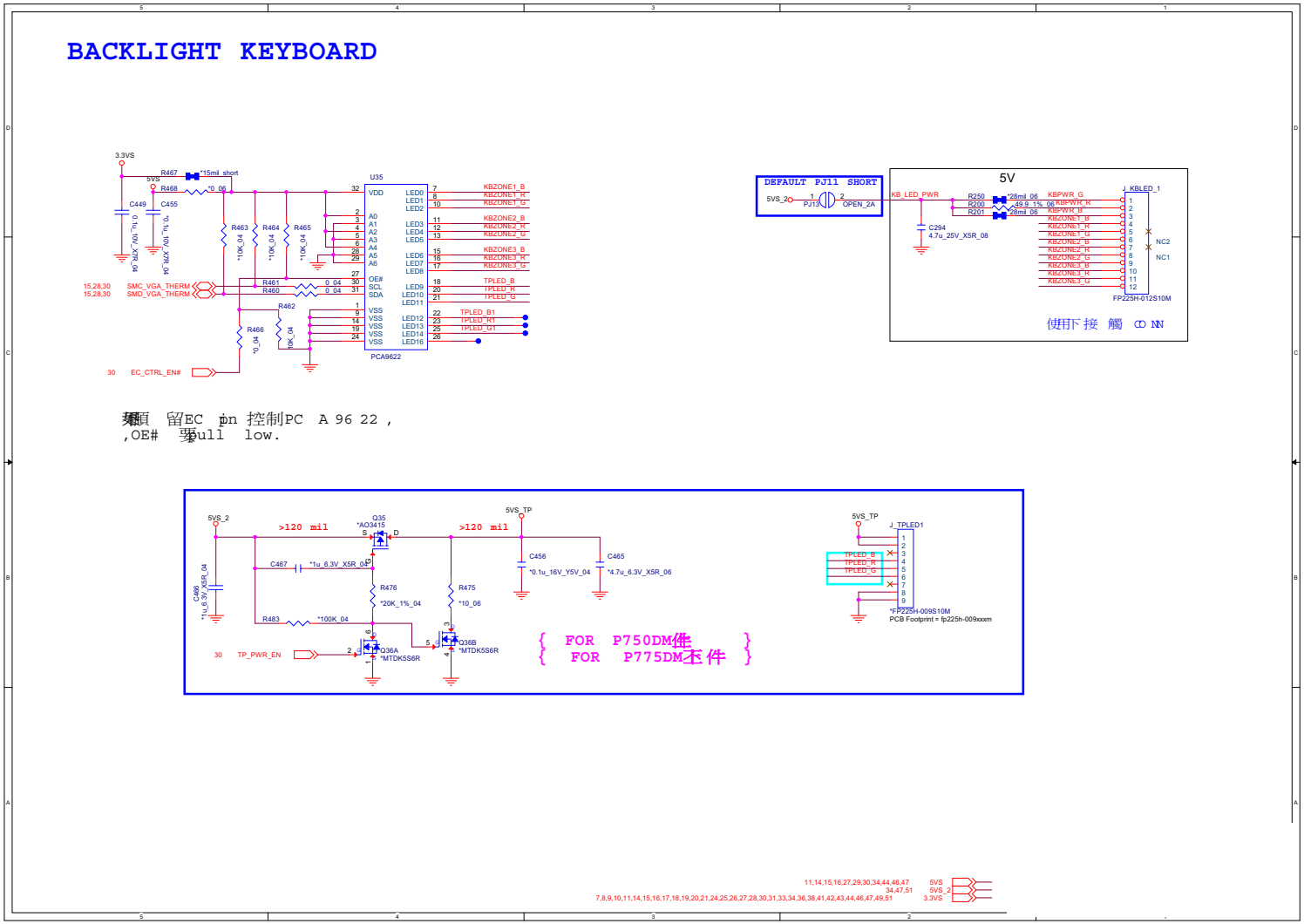

Sheet 32 of 69
Backlight
Keyboard

LID SW, Fan, LED Conn

Sheet 33 of 69
LID SW, Fan, LED Conn

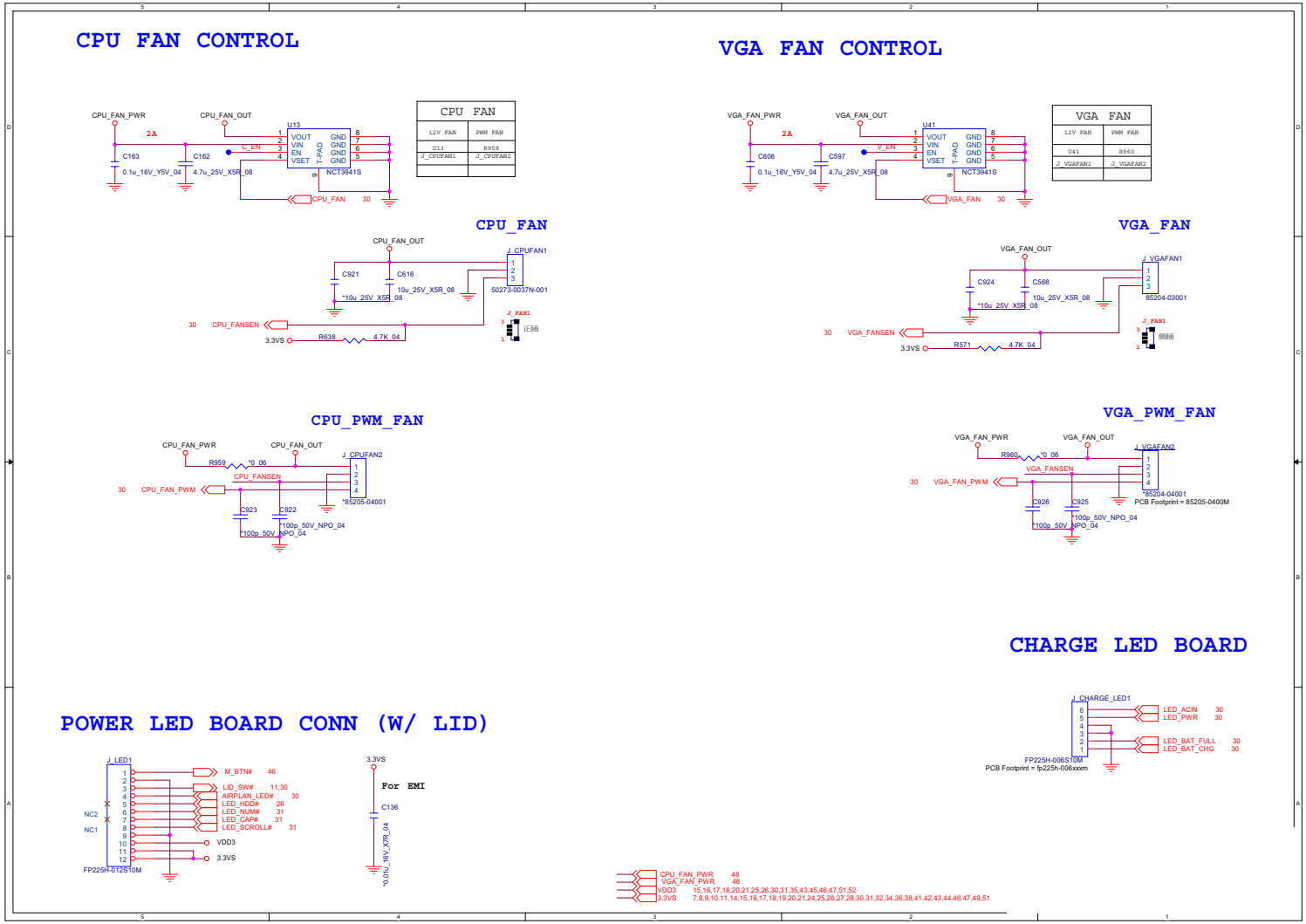

Fan, TP, FP, Multi-Con

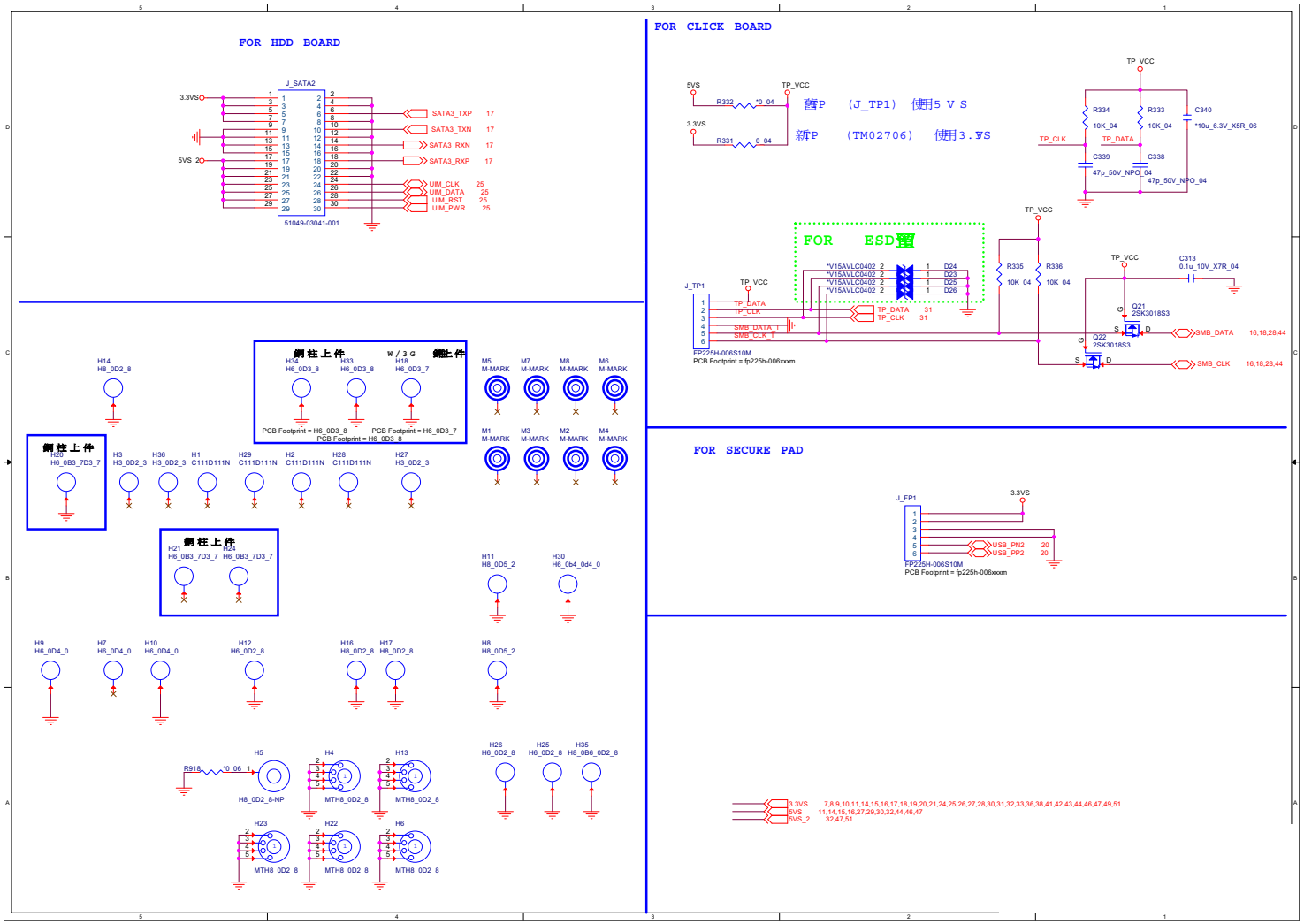

Sheet 34 of 69
Fan, TP, FP, Multi-Con

LAN E2500

Sheet 35 of 69
LAN E2500

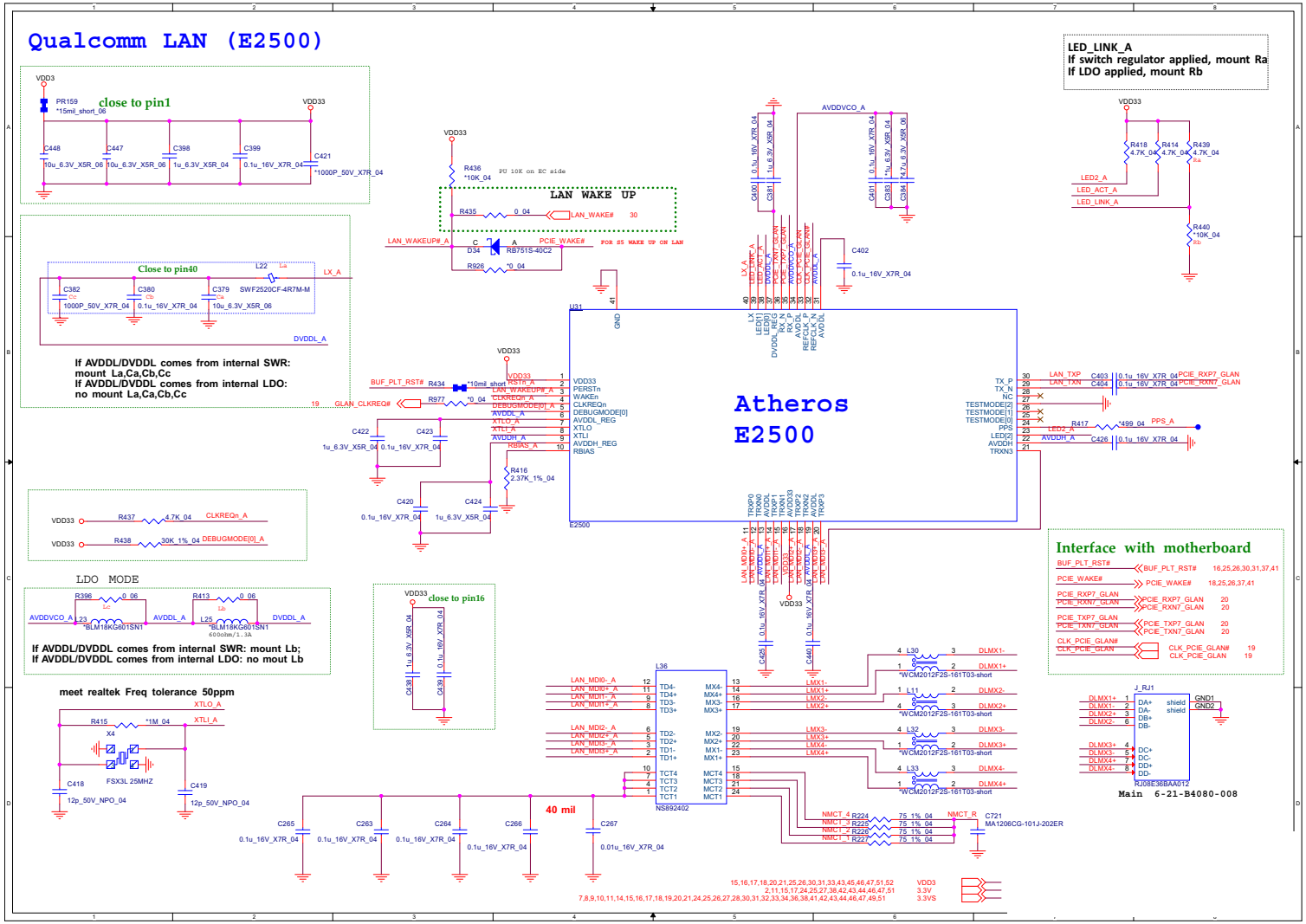

PS8338B + PS8330B

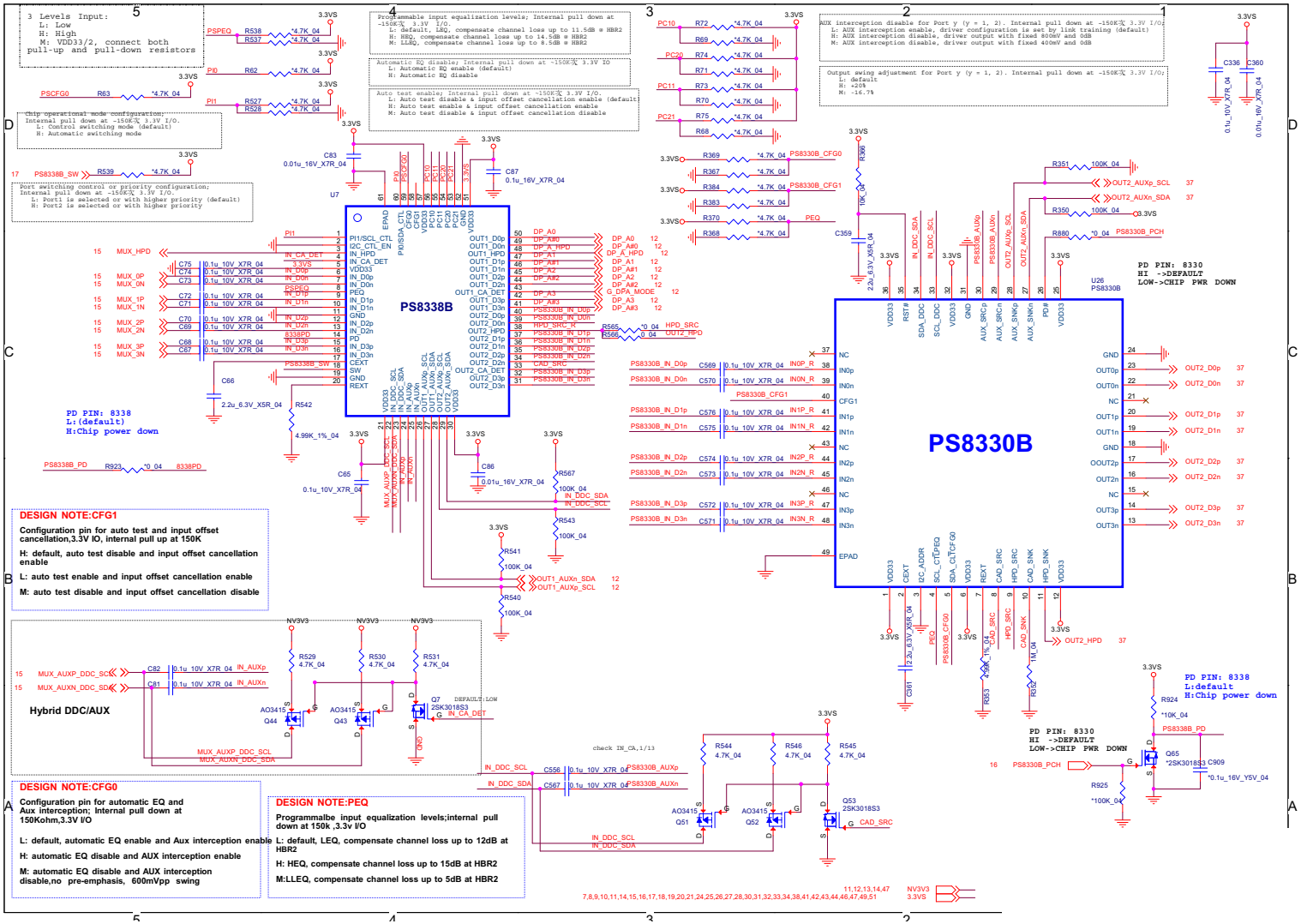

Sheet 36 of 69

TBT

Sheet 37 of 69
TBT

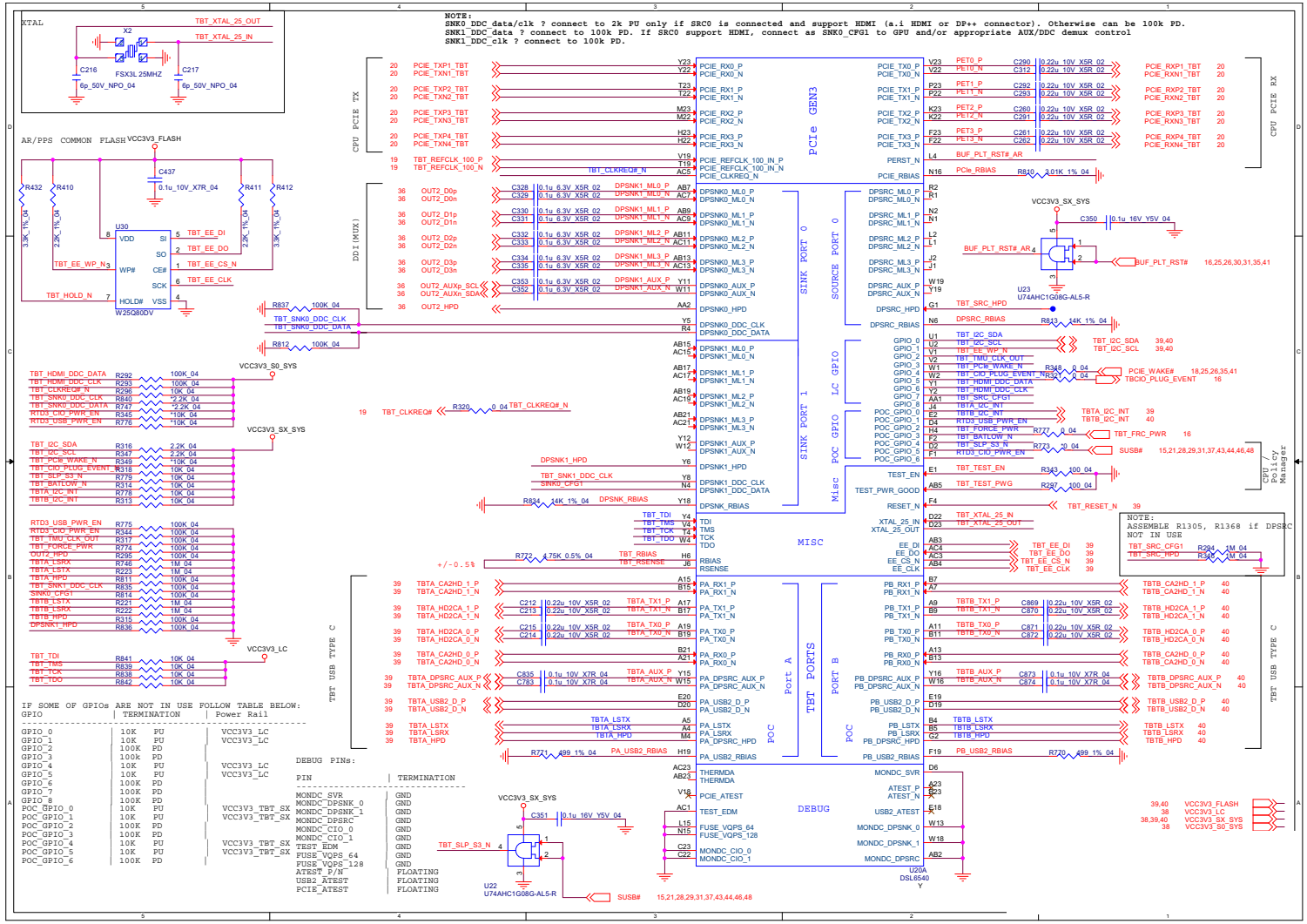

Power

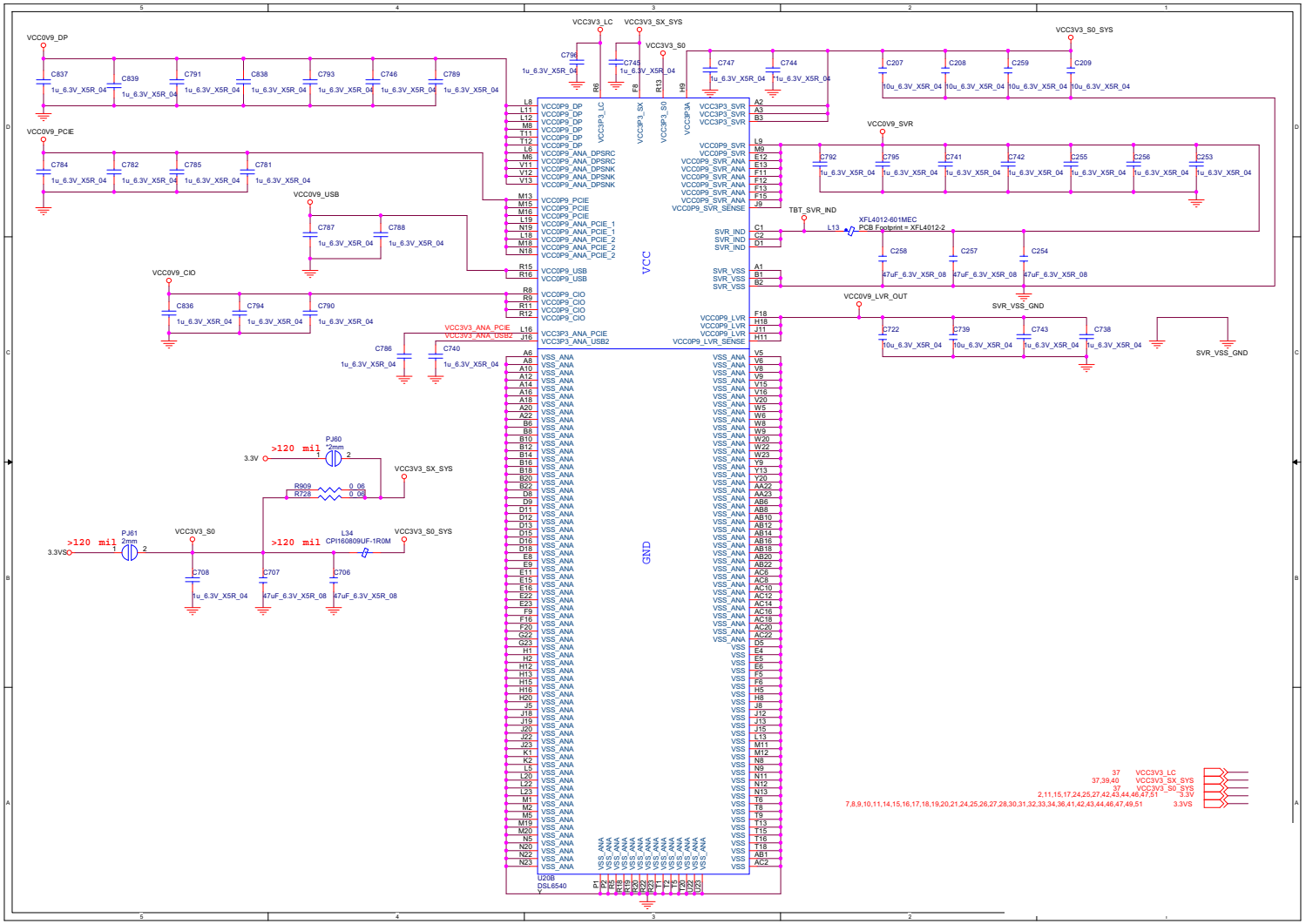

Sheet 38 of 69
Power

TPS65982

Sheet 39 of 69
TPS65982

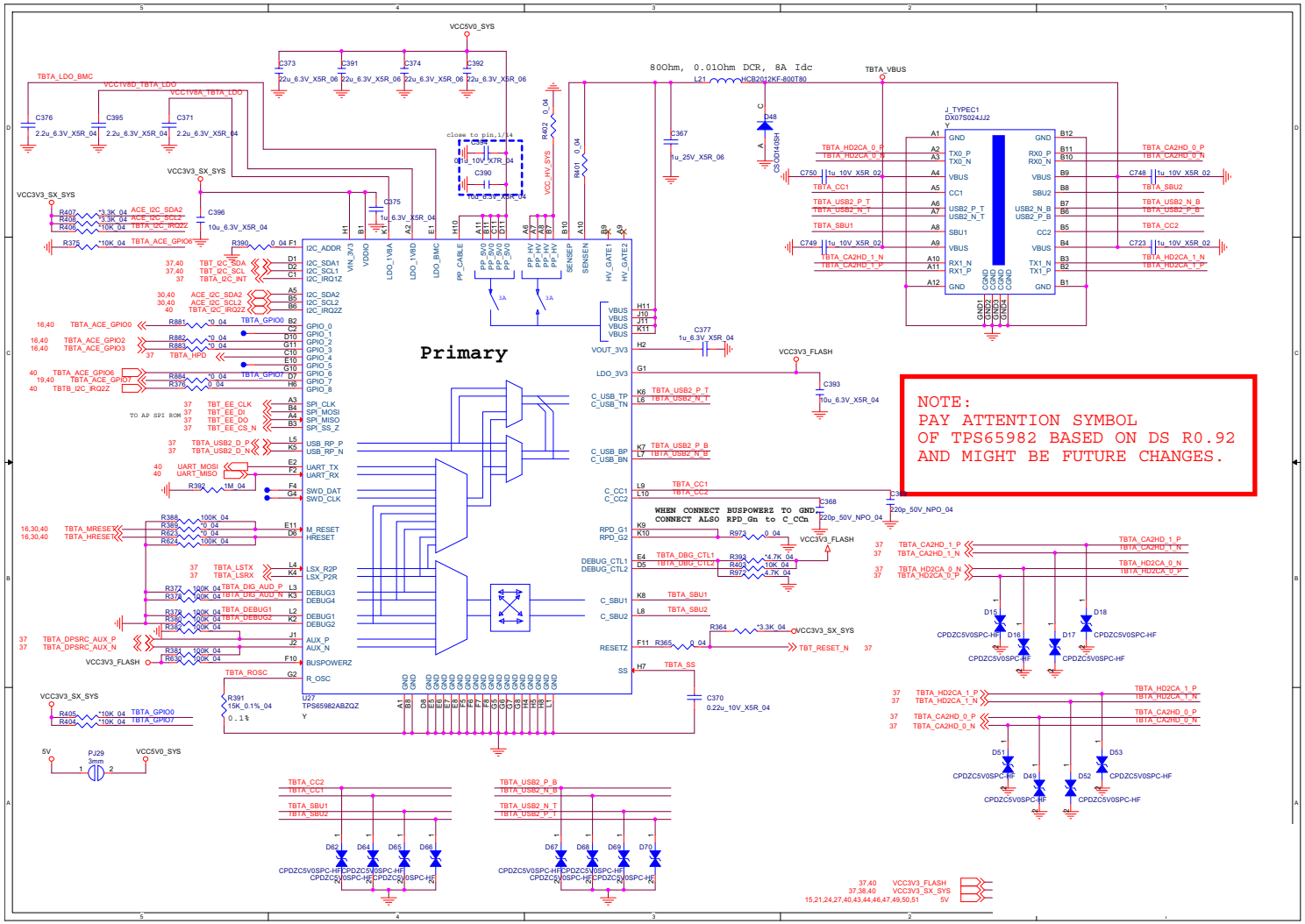

TPS65982

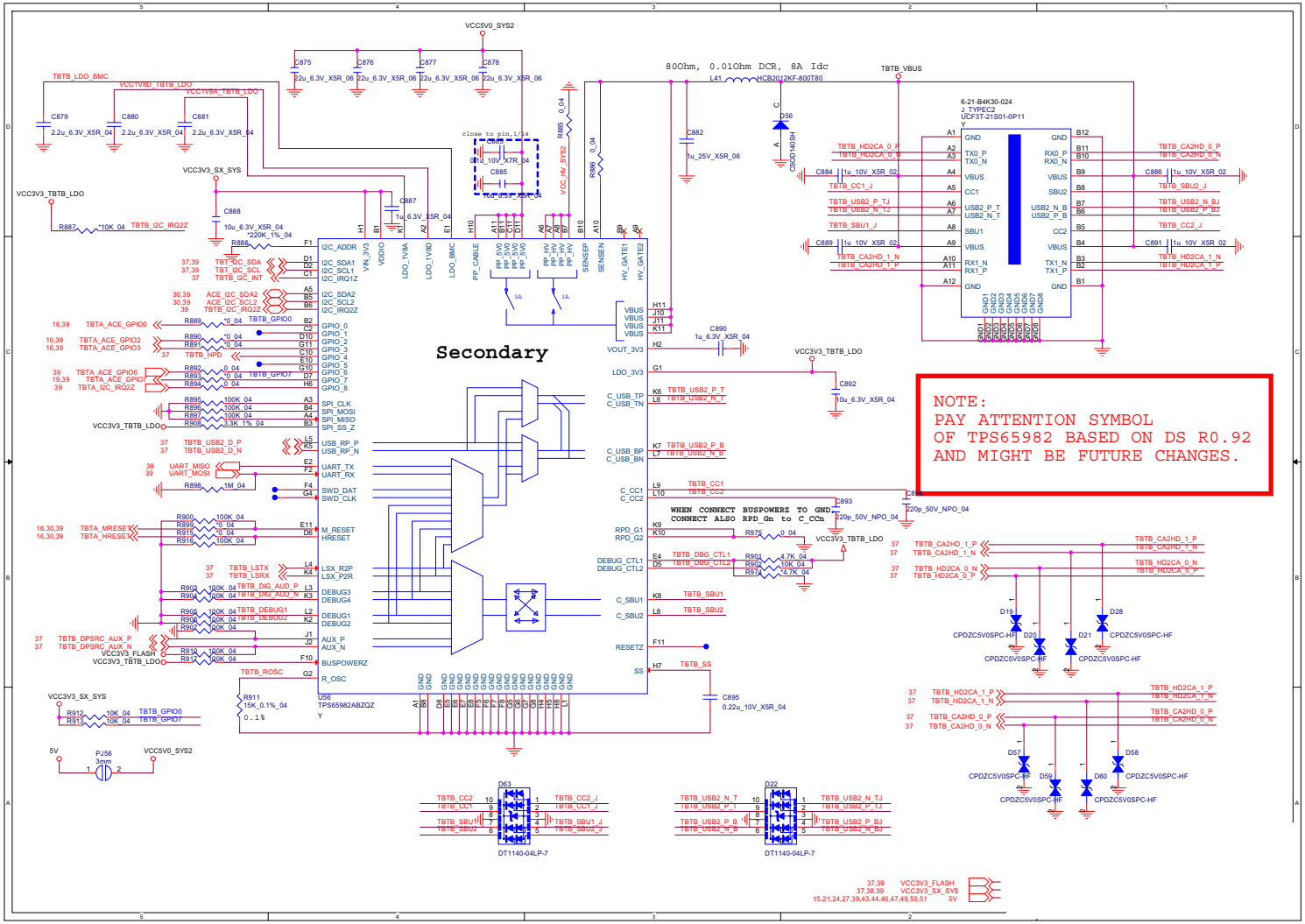

Sheet 40 of 69
TPS65982

Cardreader RTS5250

Sheet 41 of 69
Cardreader
RTS5250

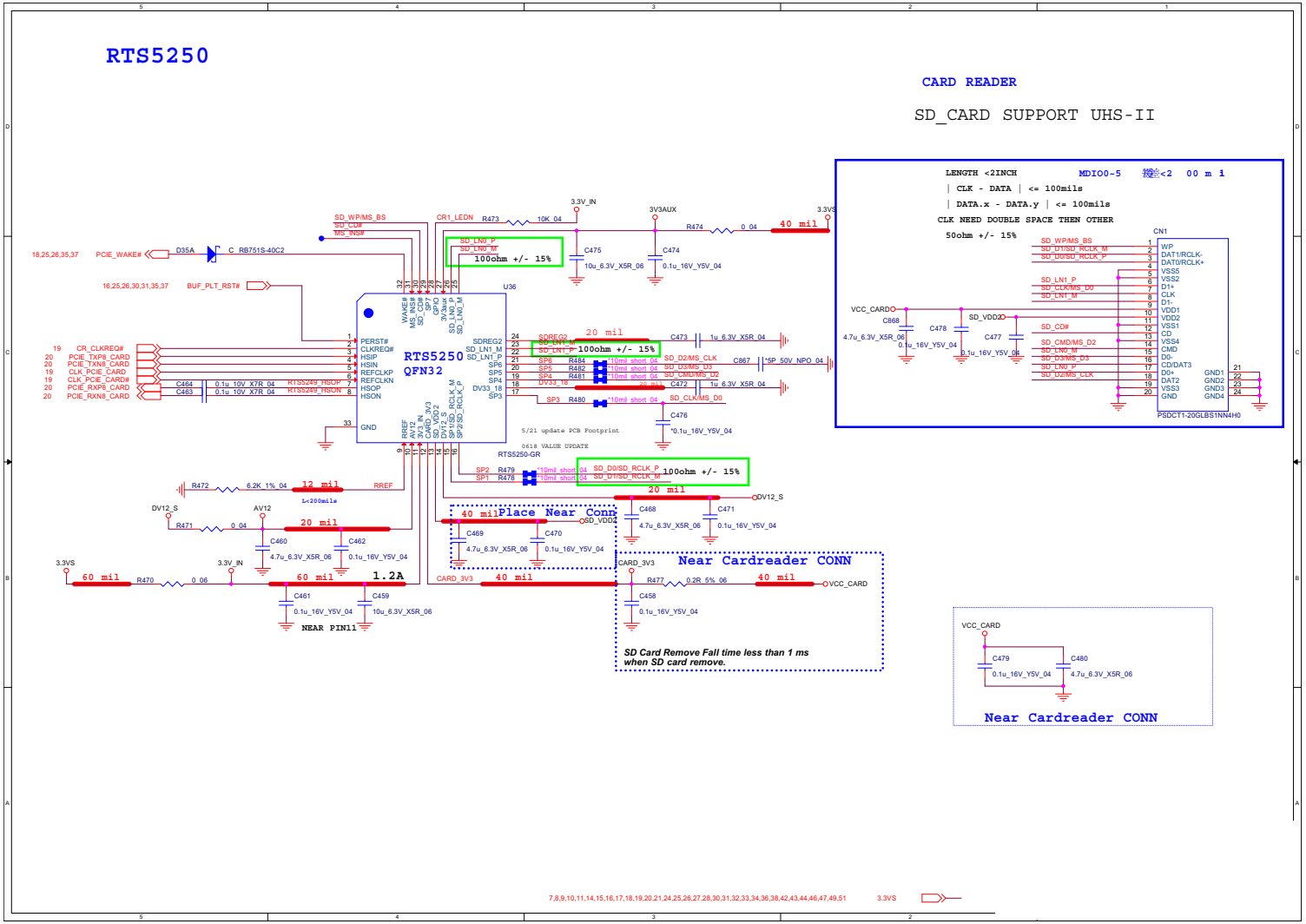

TPM SLB9655TT & NPCT420

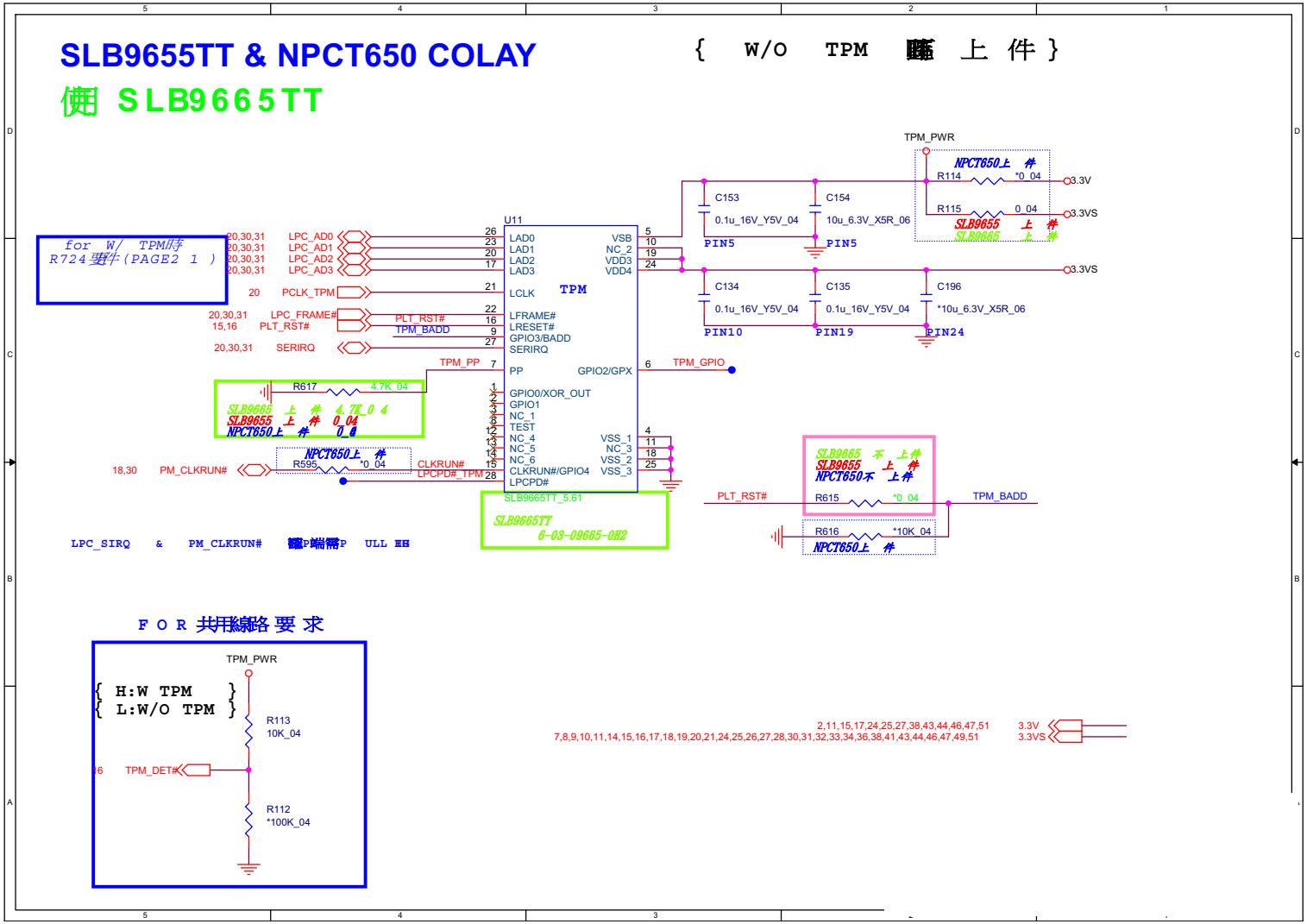

Sheet 42 of 69
TPM SLB9655TT & NPCT420

VCCIO / 1P0A

Sheet 43 of 69
VCCIO / 1P0A

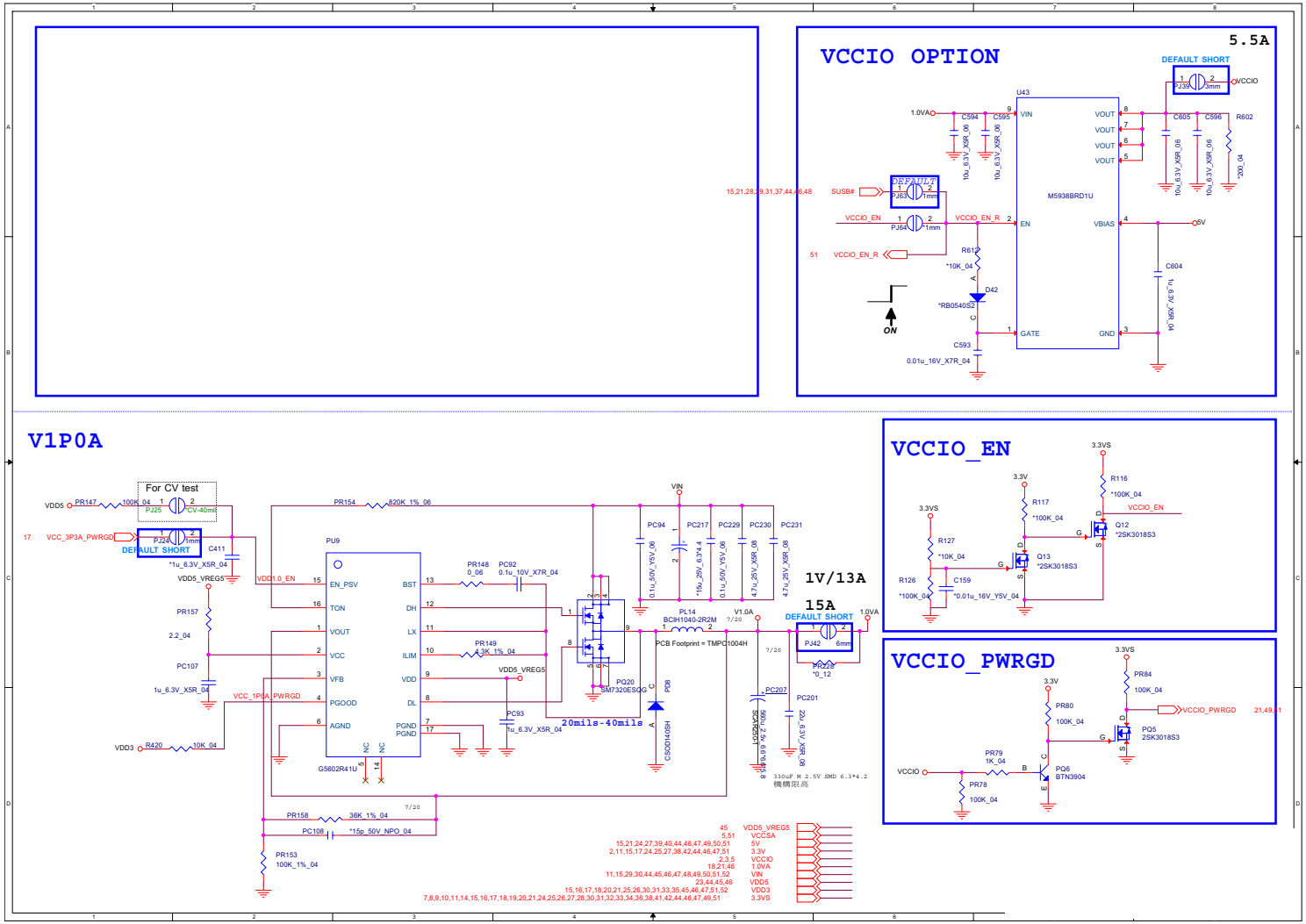

DDR 1.2V/0.6VS/VCCPLL_OC

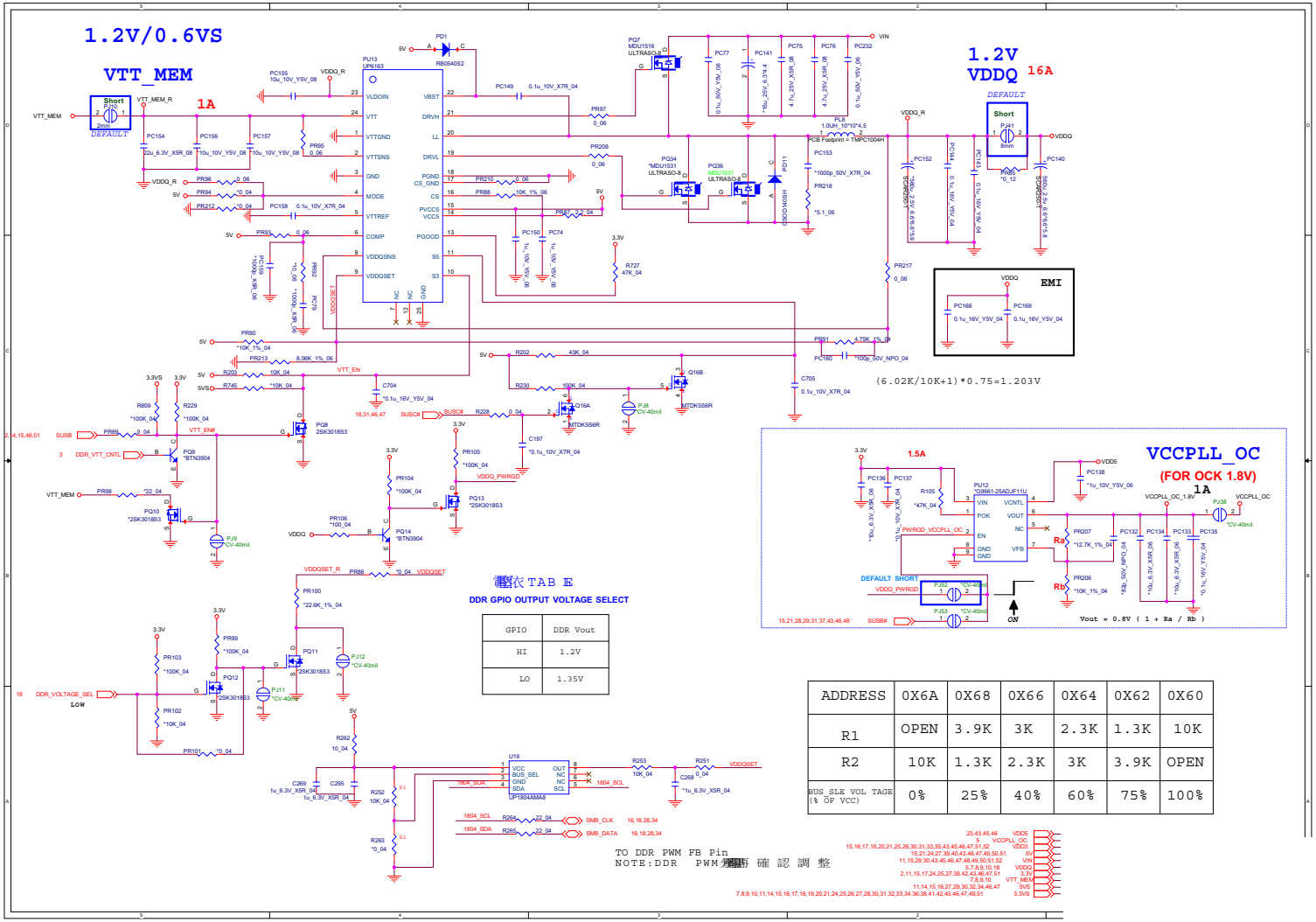

Sheet 44 of 69
DDR 1.2V/0.6VS/
VCCPLL_OC

B.Schematic Diagrams

VDD3, VDD5

Sheet 45 of 69
VDD3, VDD5

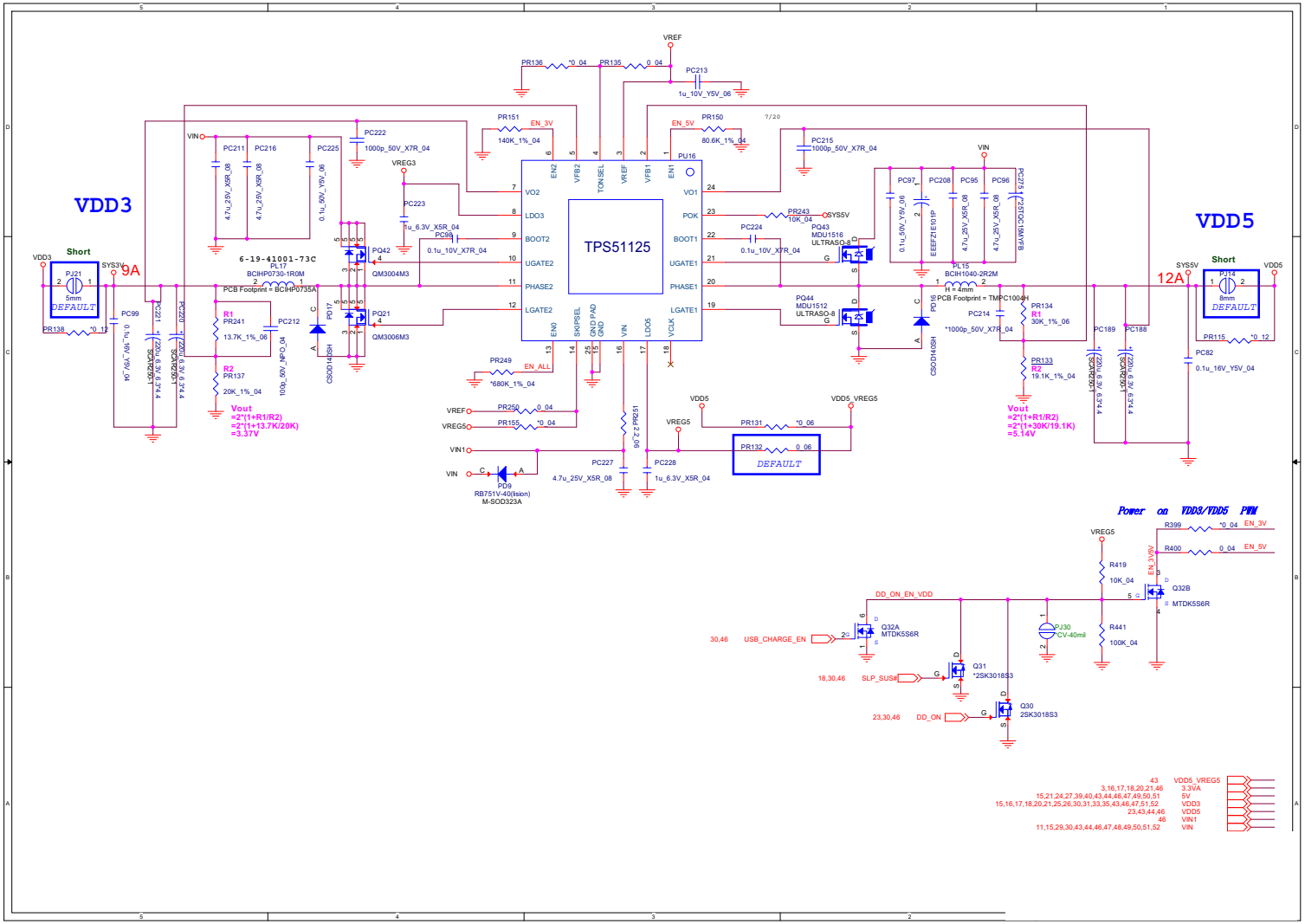

5V/5VS, 3V/3.3VS, 3.3VA

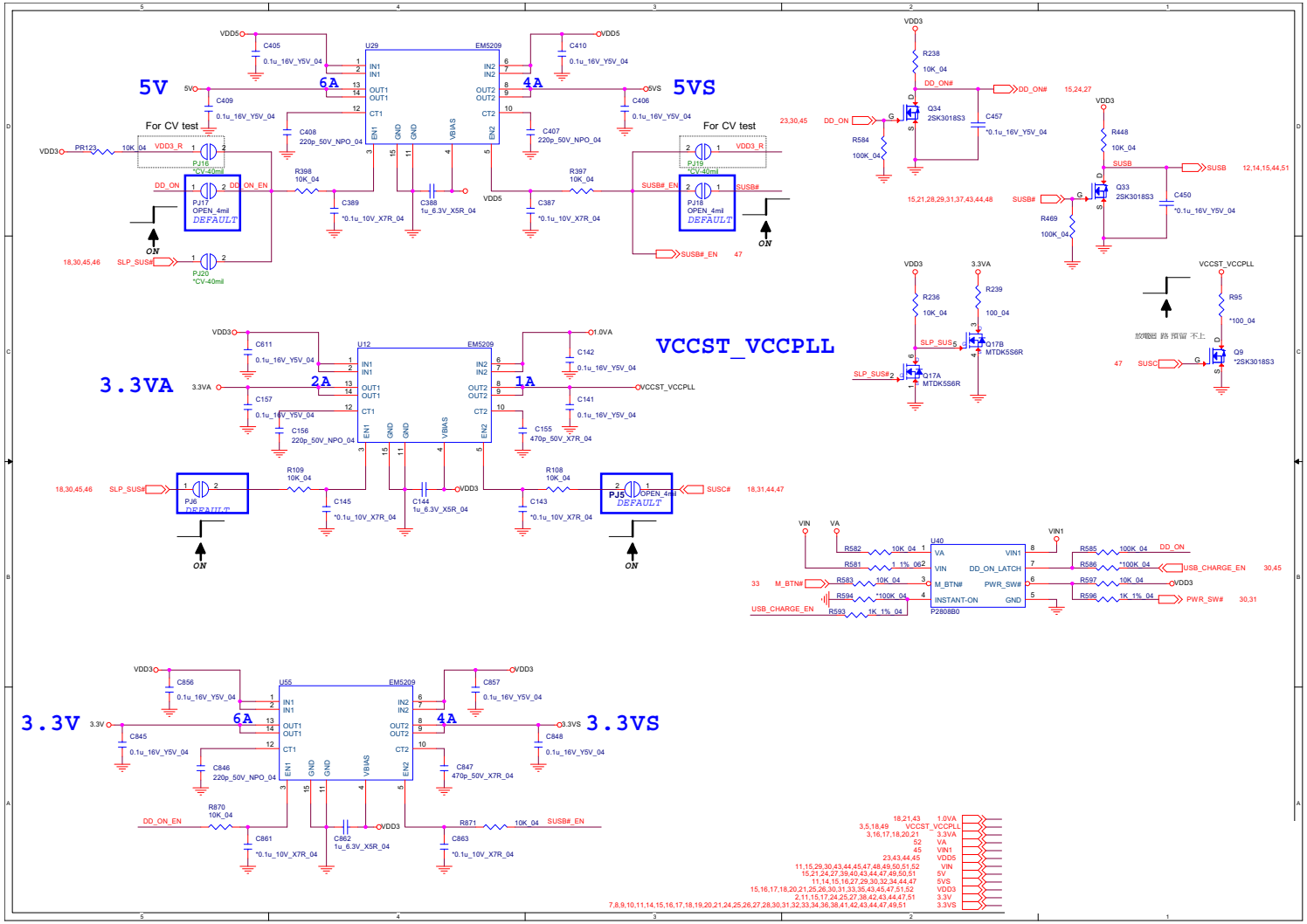

Sheet 46 of 69
5V/5VS, 3V/3.3VS, 3.3VA

5VS_2/2.5V/NV3V3/3.3V_ON/5V_RUN

Sheet 47 of 69
5VS_2/2.5V/NV3V3/
3.3V_ON/5V_RUN

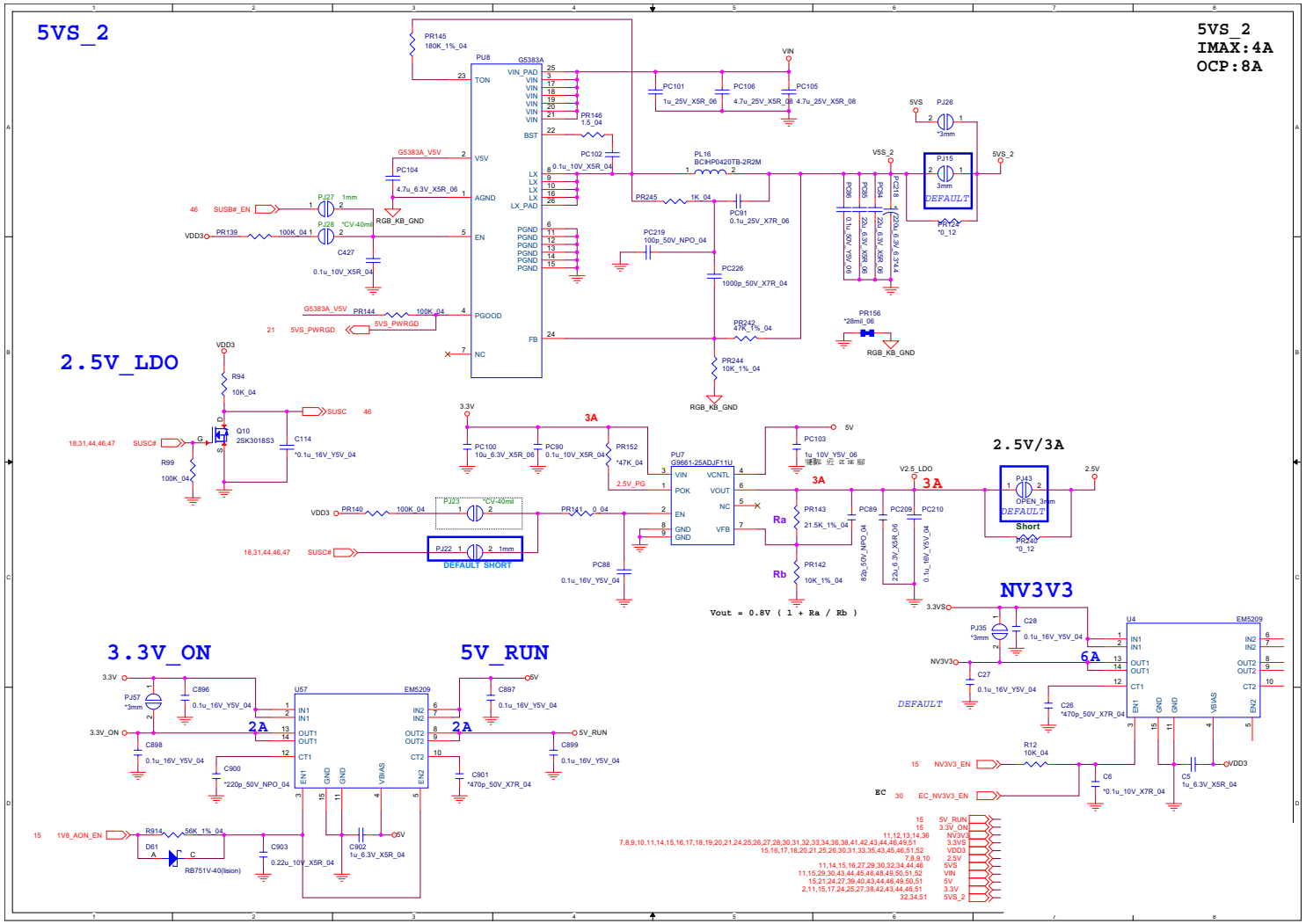

Fan CPU, VGA Power

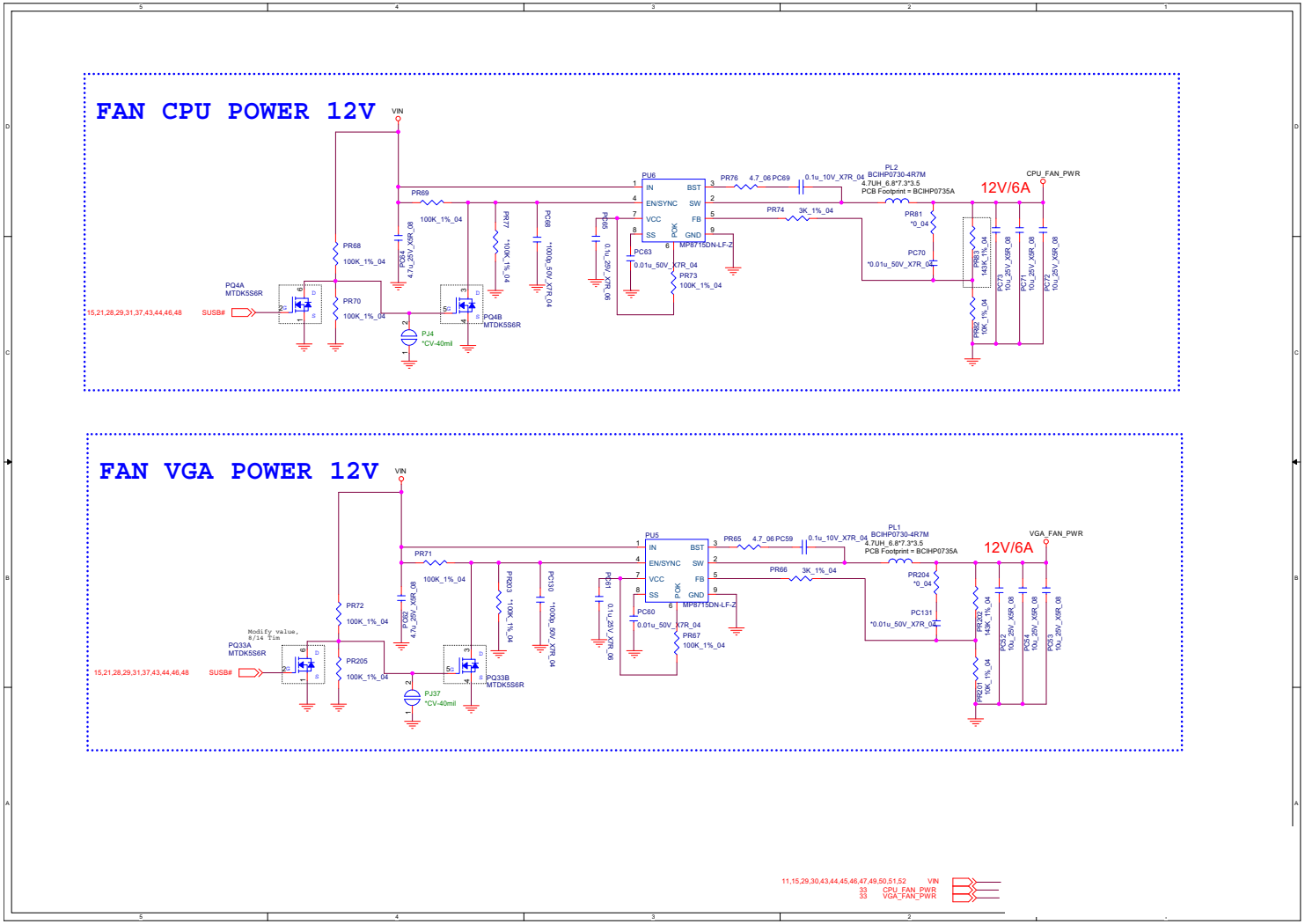

Sheet 48 of 69
Fan CPU, VGA Power

VCore

Sheet 49 of 69
VCore

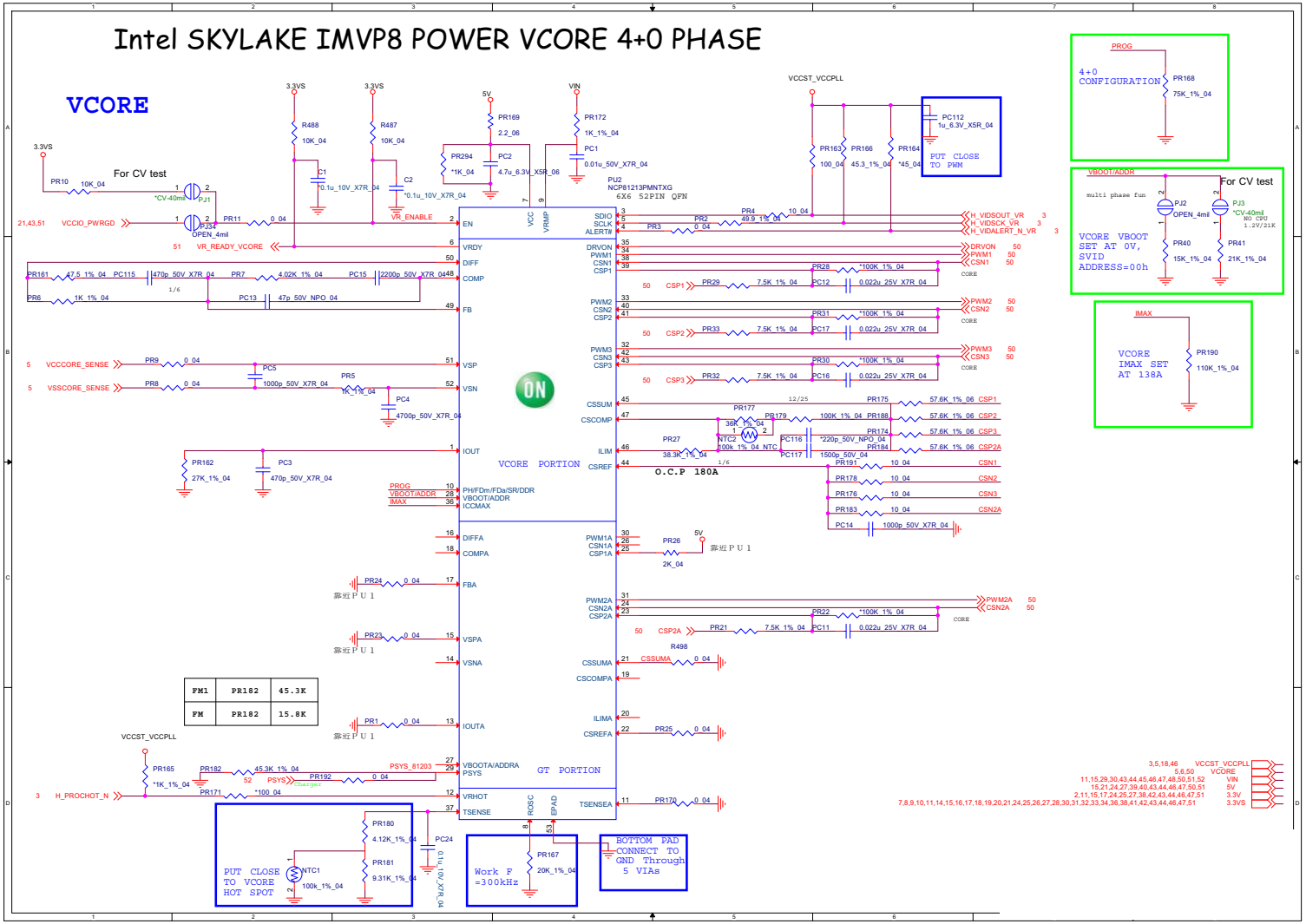

VCore Output Stage

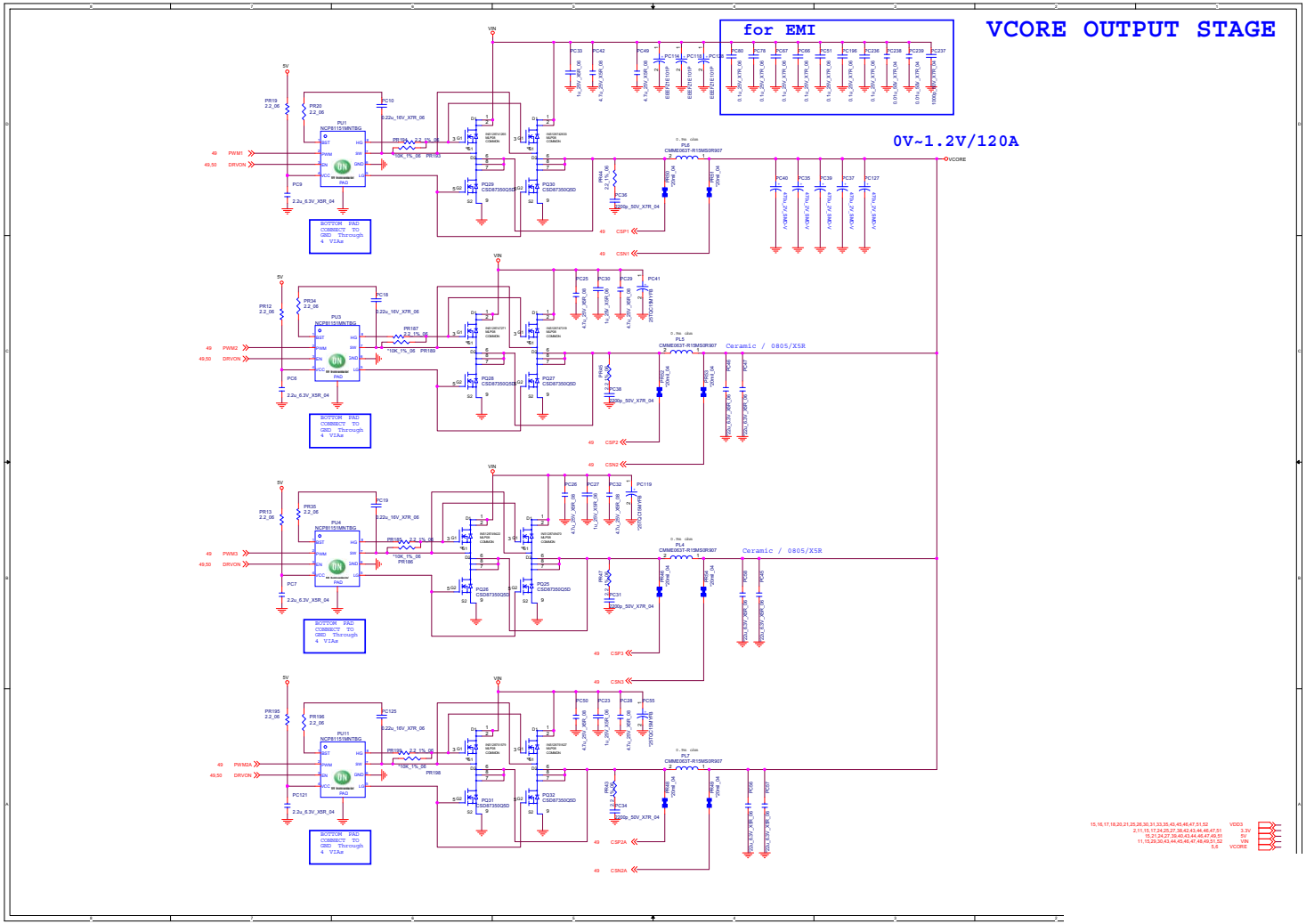

Sheet 50 of 69
VCore Output Stage

VCCSA / VCCGT

Sheet 51 of 69
VCCSA / VCCGT

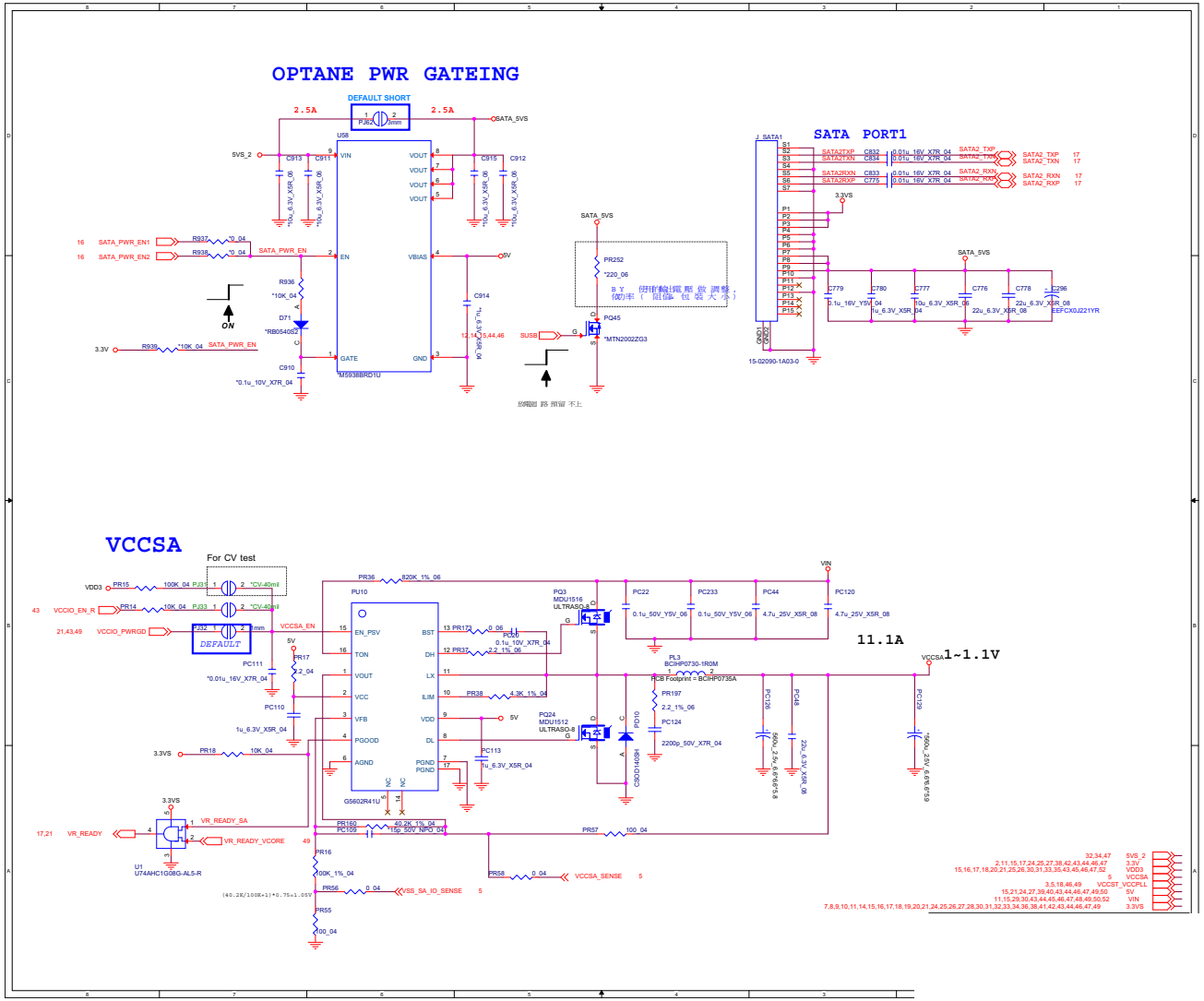

Power Charger, DC-In

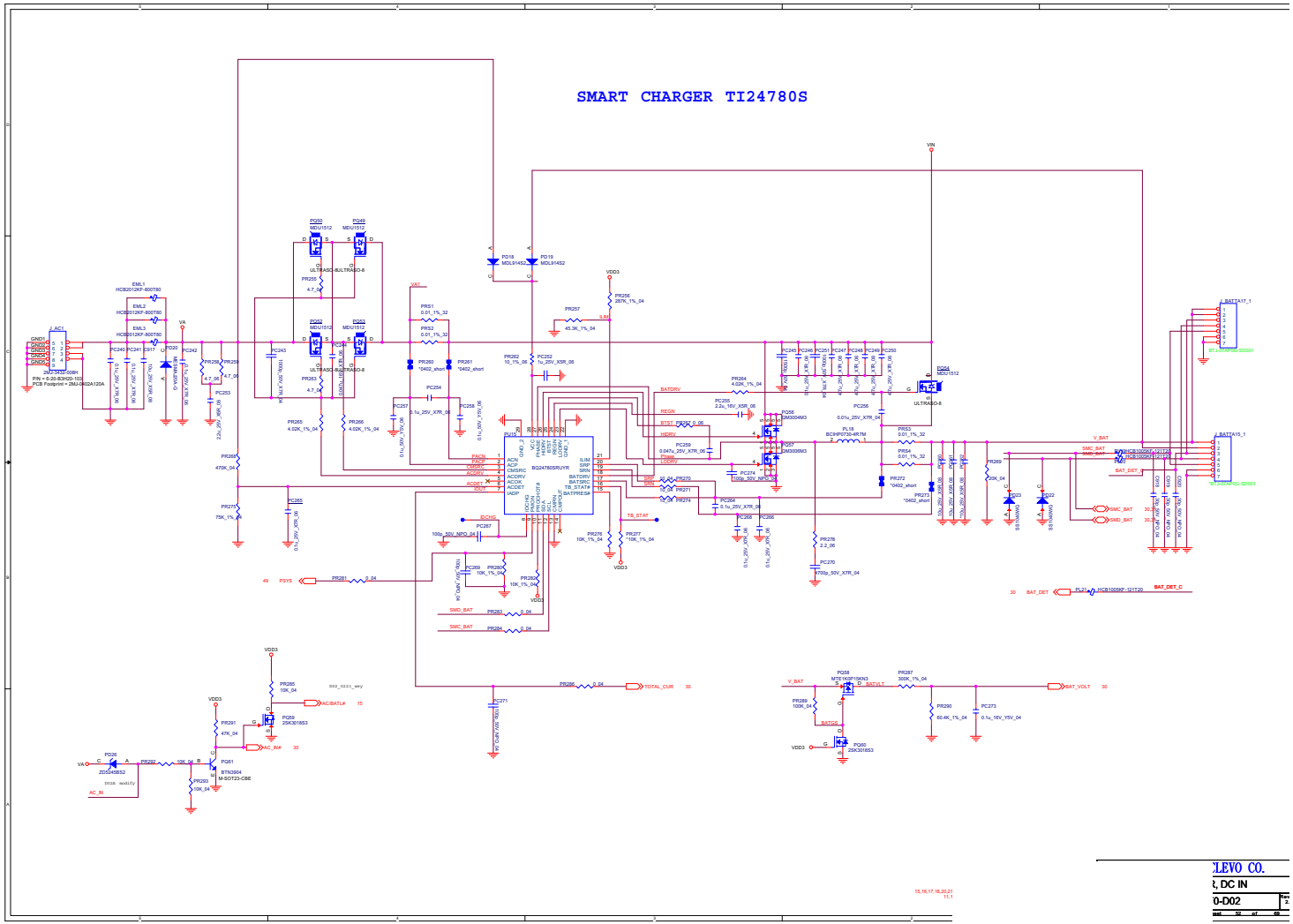

Sheet 52 of 69
Power Charger, DC-In

P750DM HDD Board

Sheet 53 of 69
P750DM HDD Board

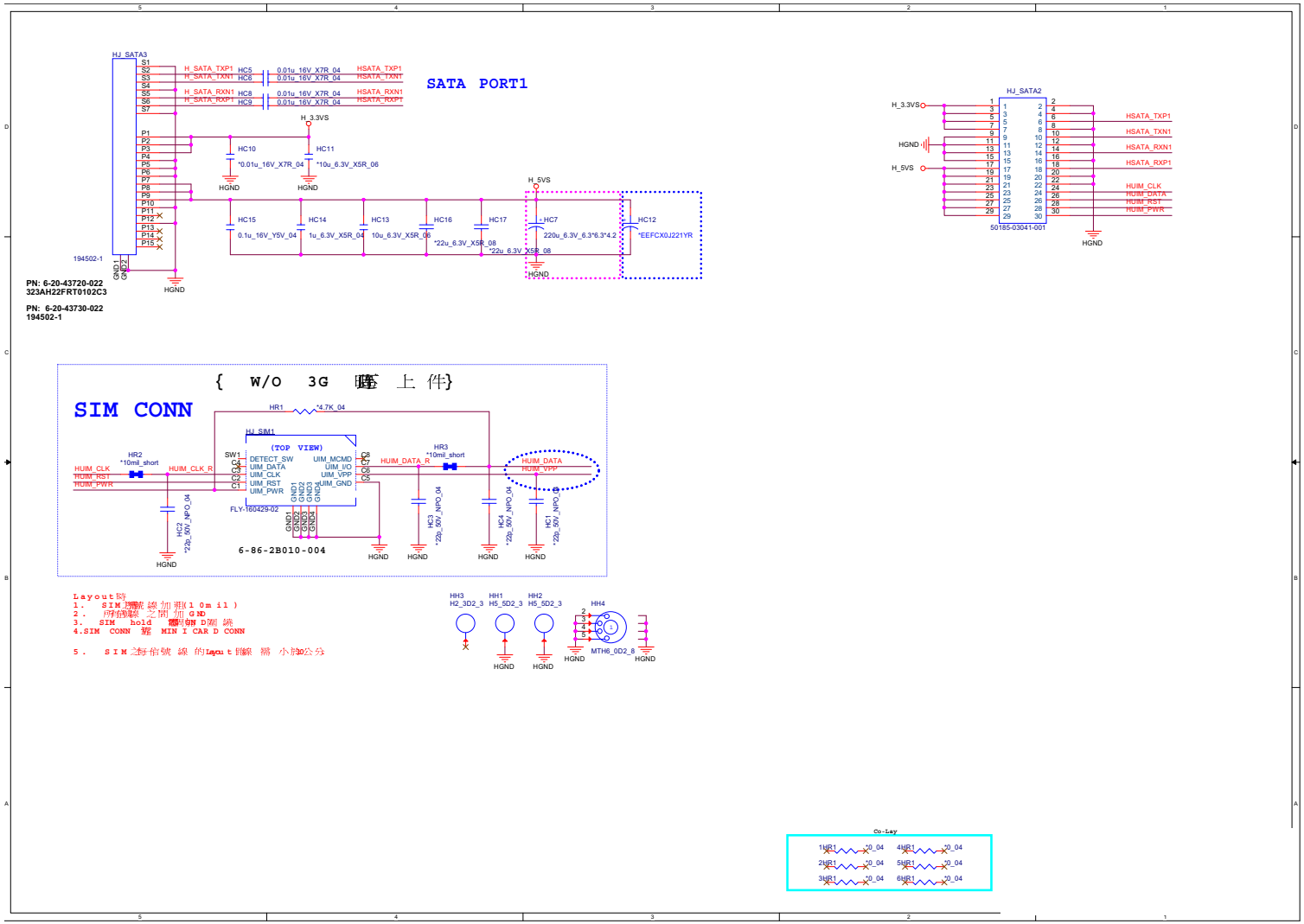

P750DM Power LED Board

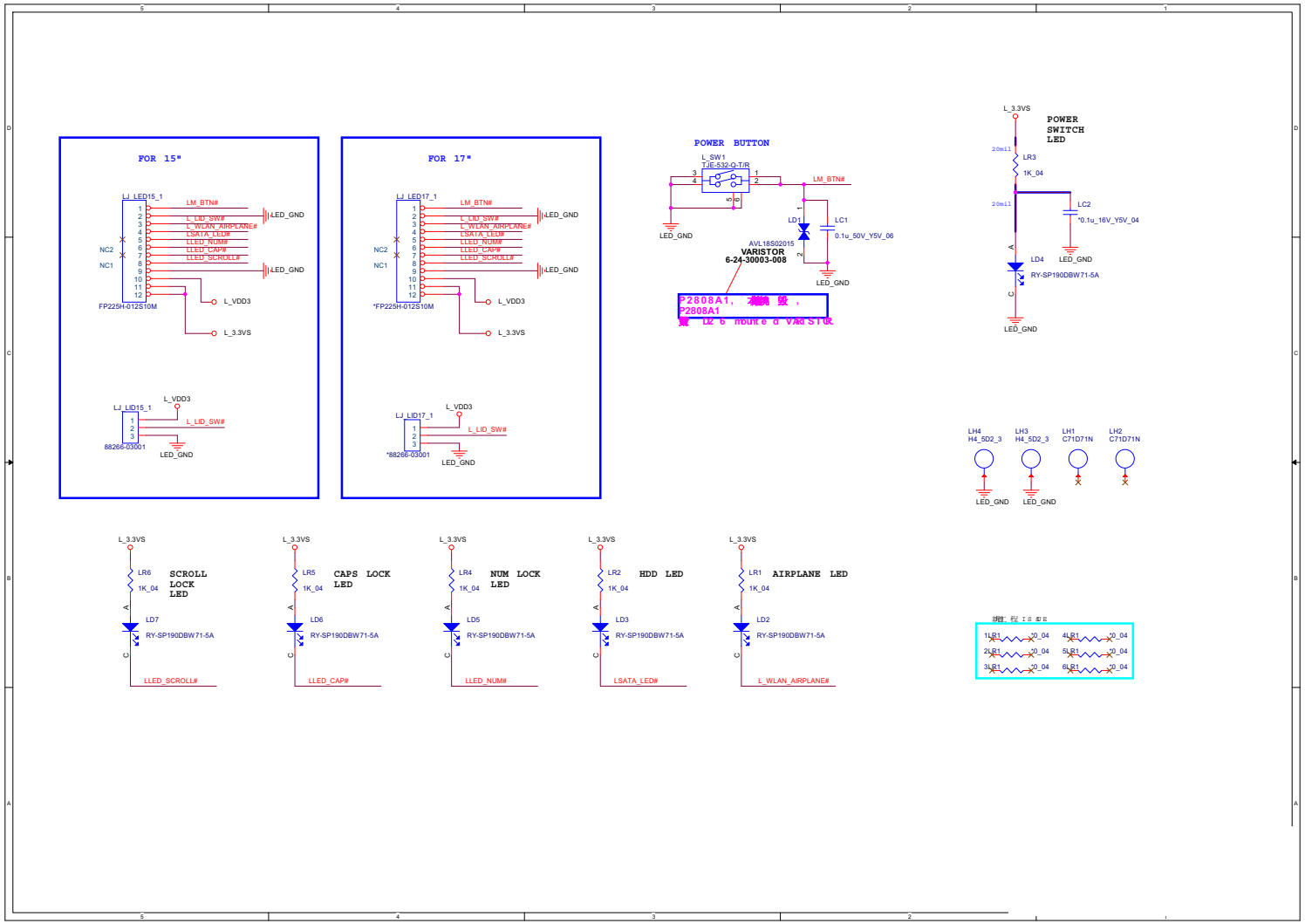

Sheet 54 of 69
P750DM Power
LED Board

P750DM Click Board

Sheet 55 of 69
P750DM Click Board

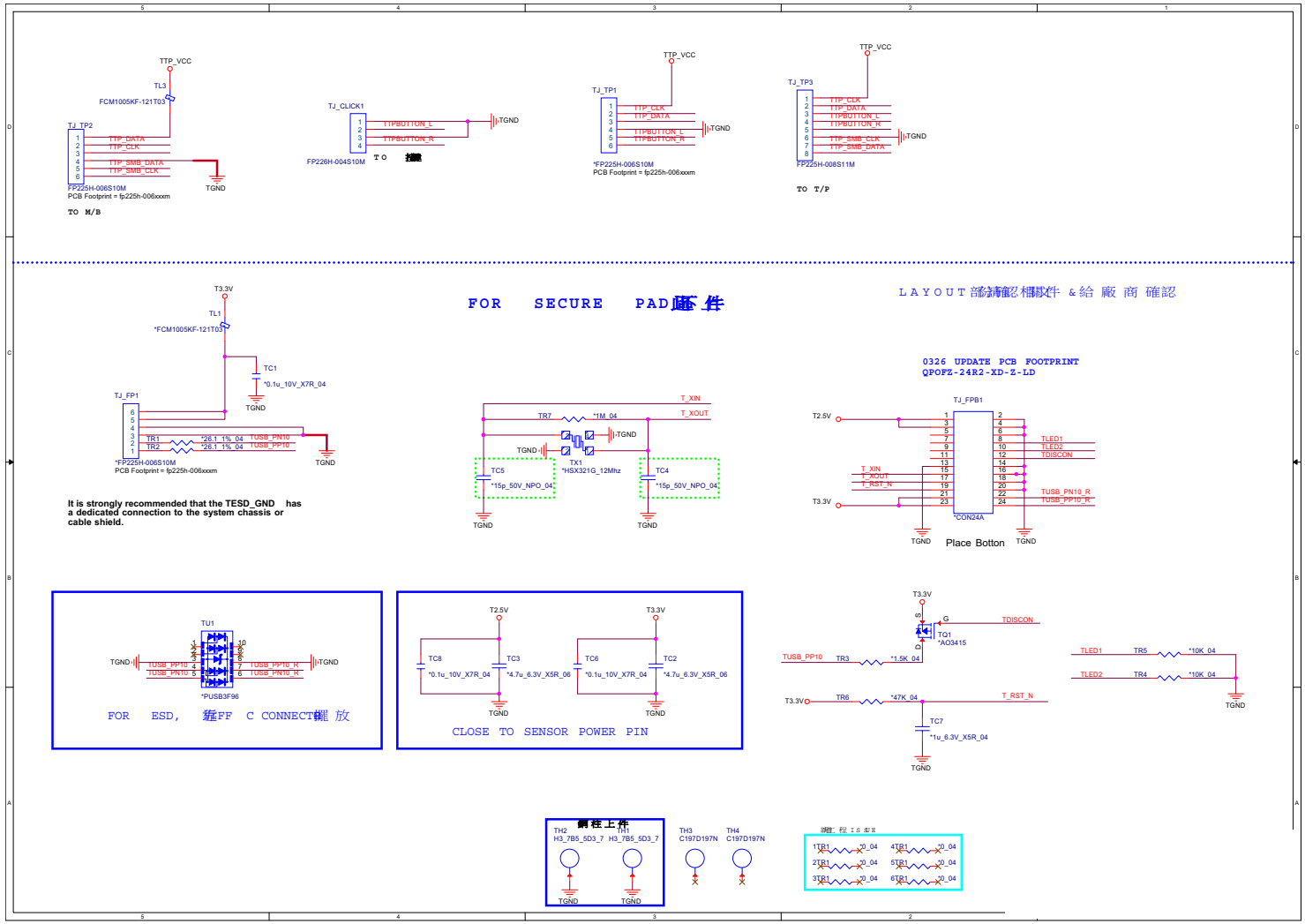

P750DM Audio Board

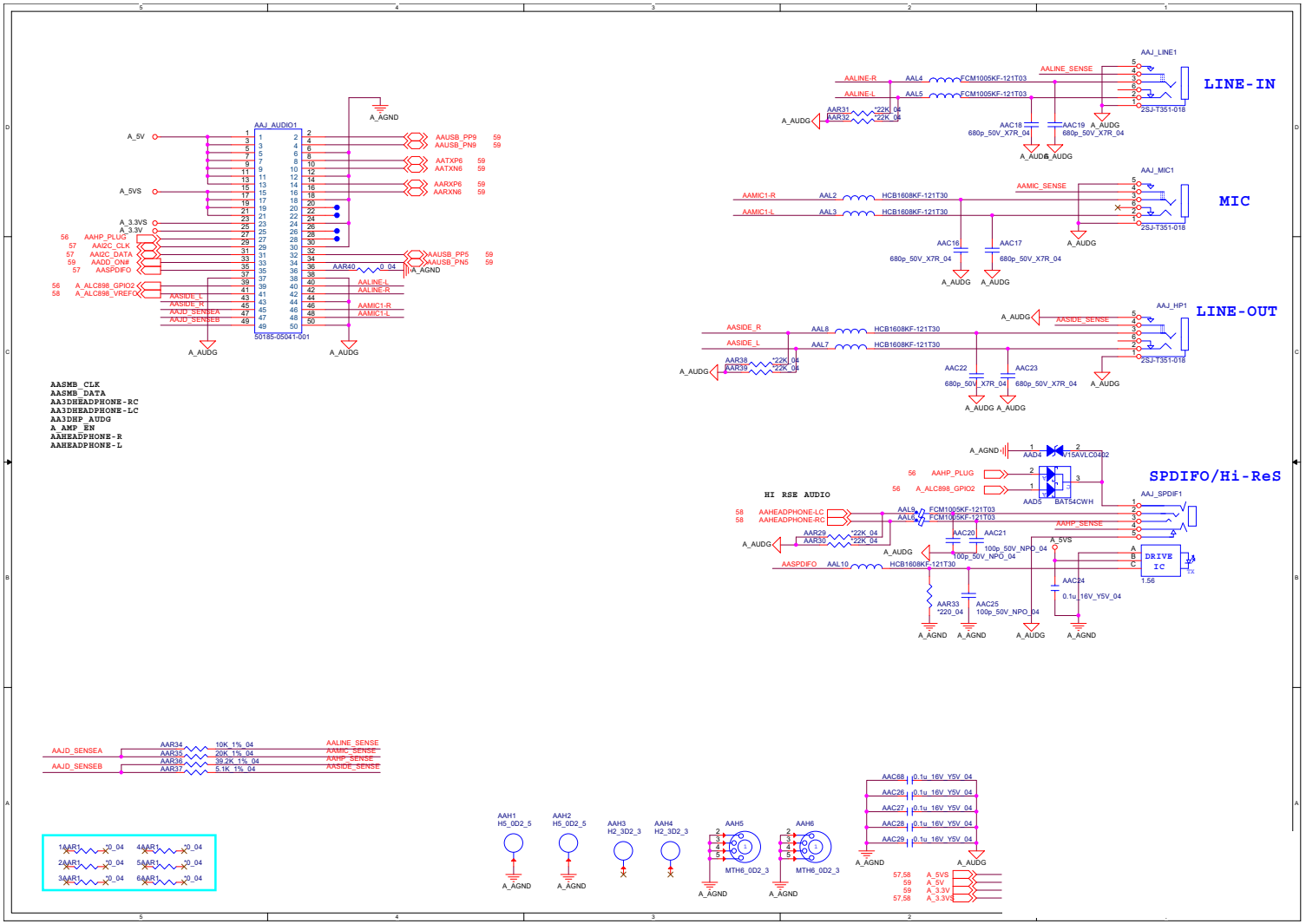

Sheet 56 of 69
P750DM Audio Board

P750DM Audio ESS DAC

Sheet 57 of 69
P750DM Audio ESS DAC

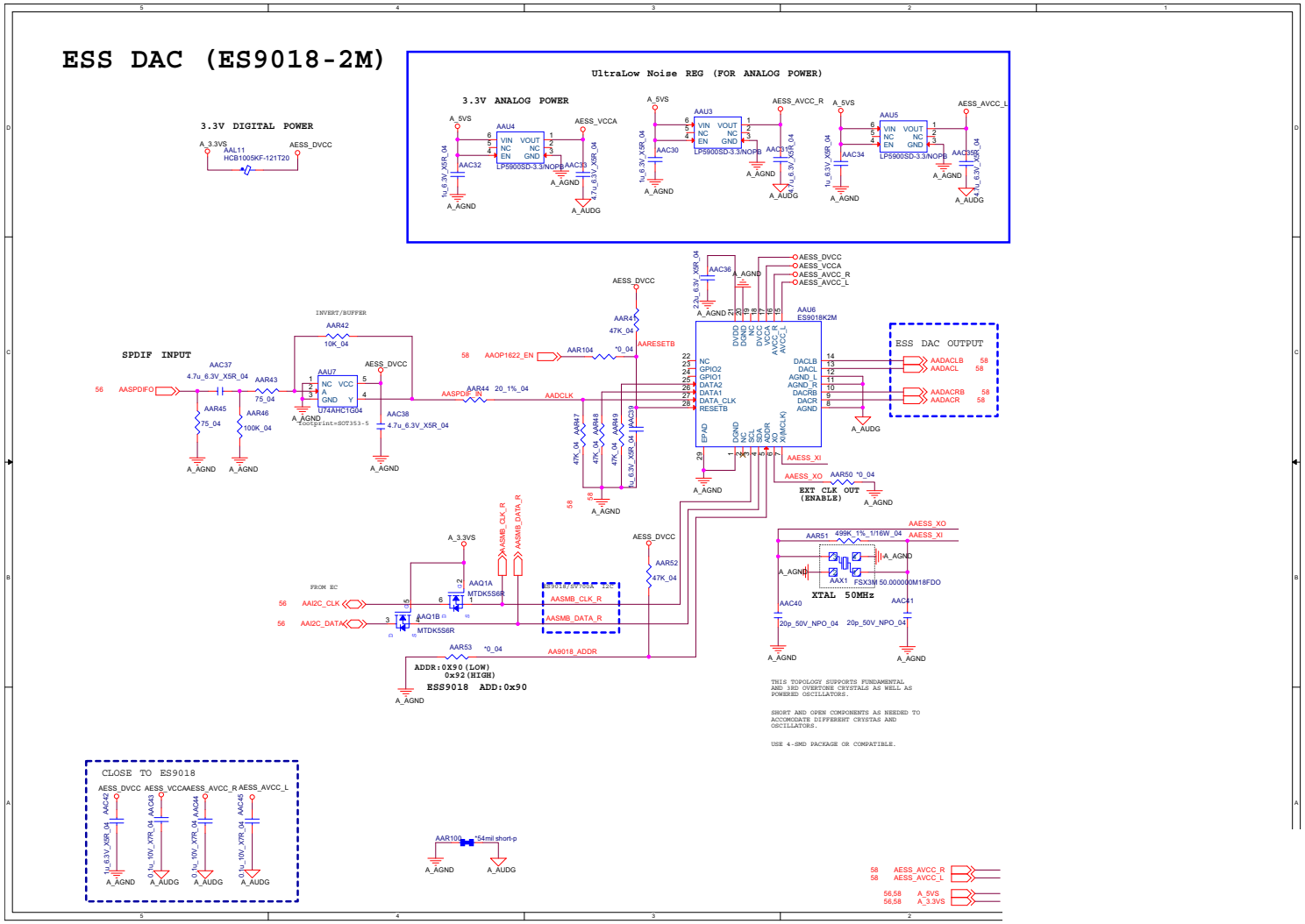

P750DM Audio HP AMP

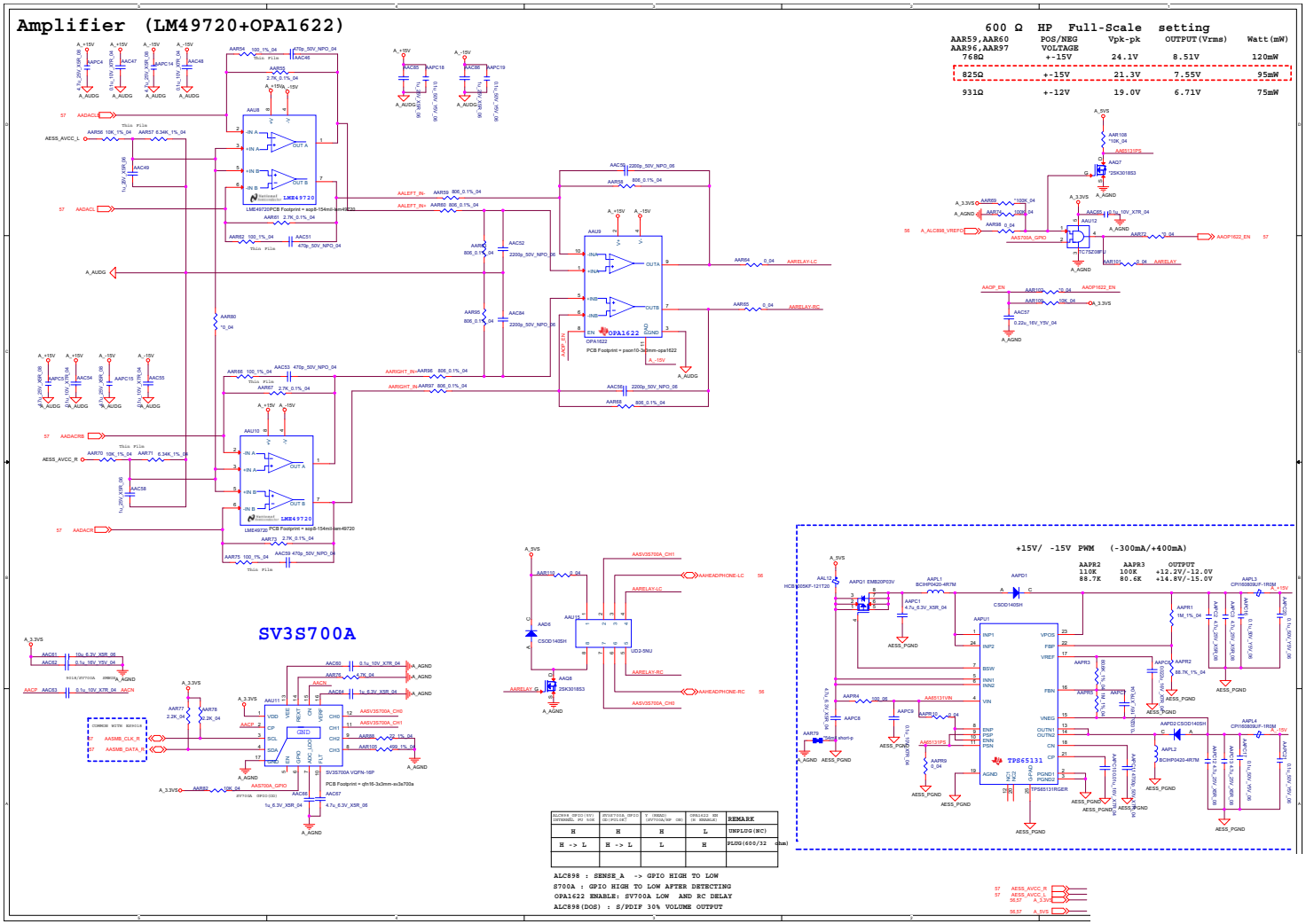

Sheet 58 of 69
P750DM Audio HP AMP

P750DM Audio Board

Sheet 59 of 69
P750DM Audio Board

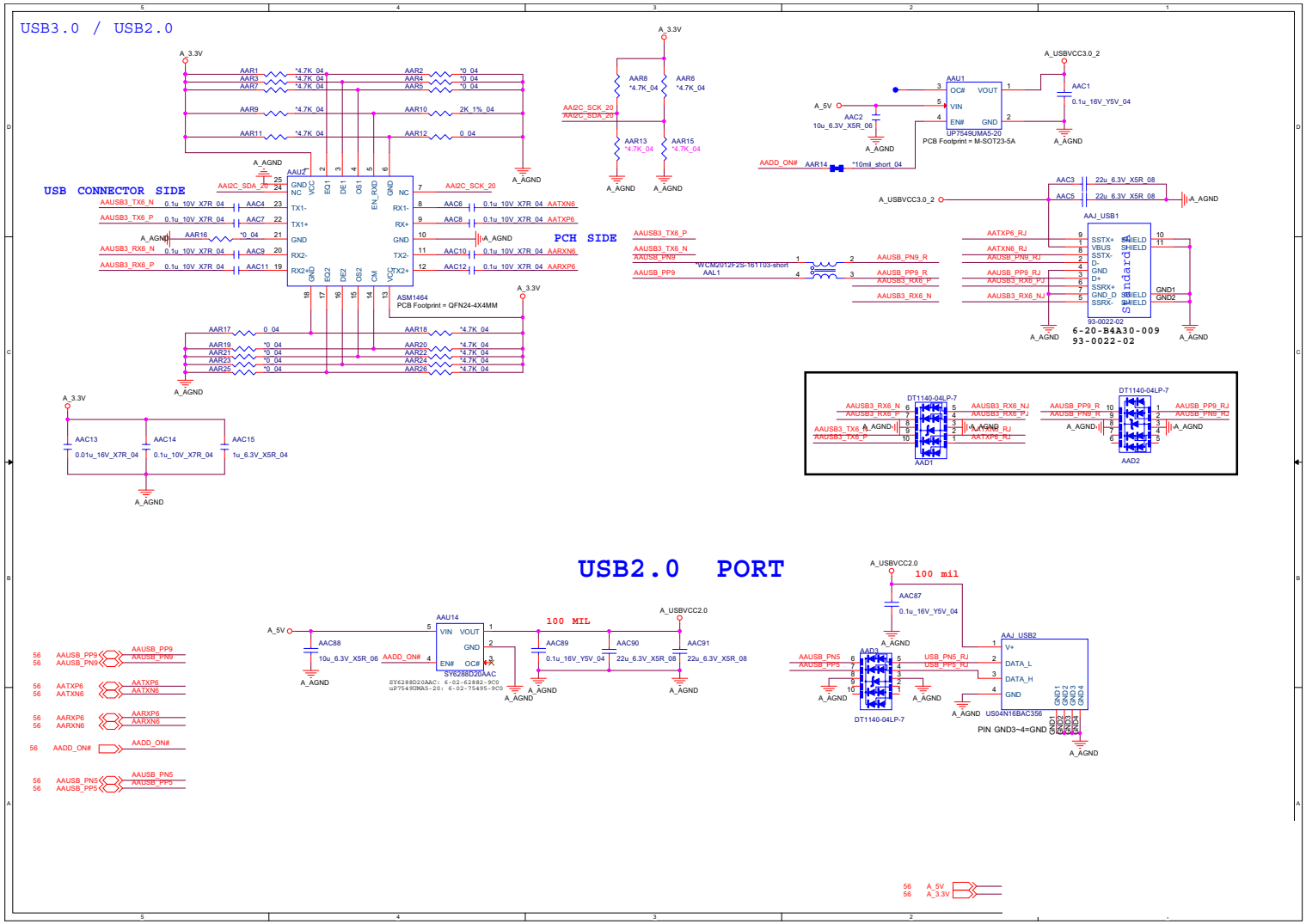

P775DM Audio Board

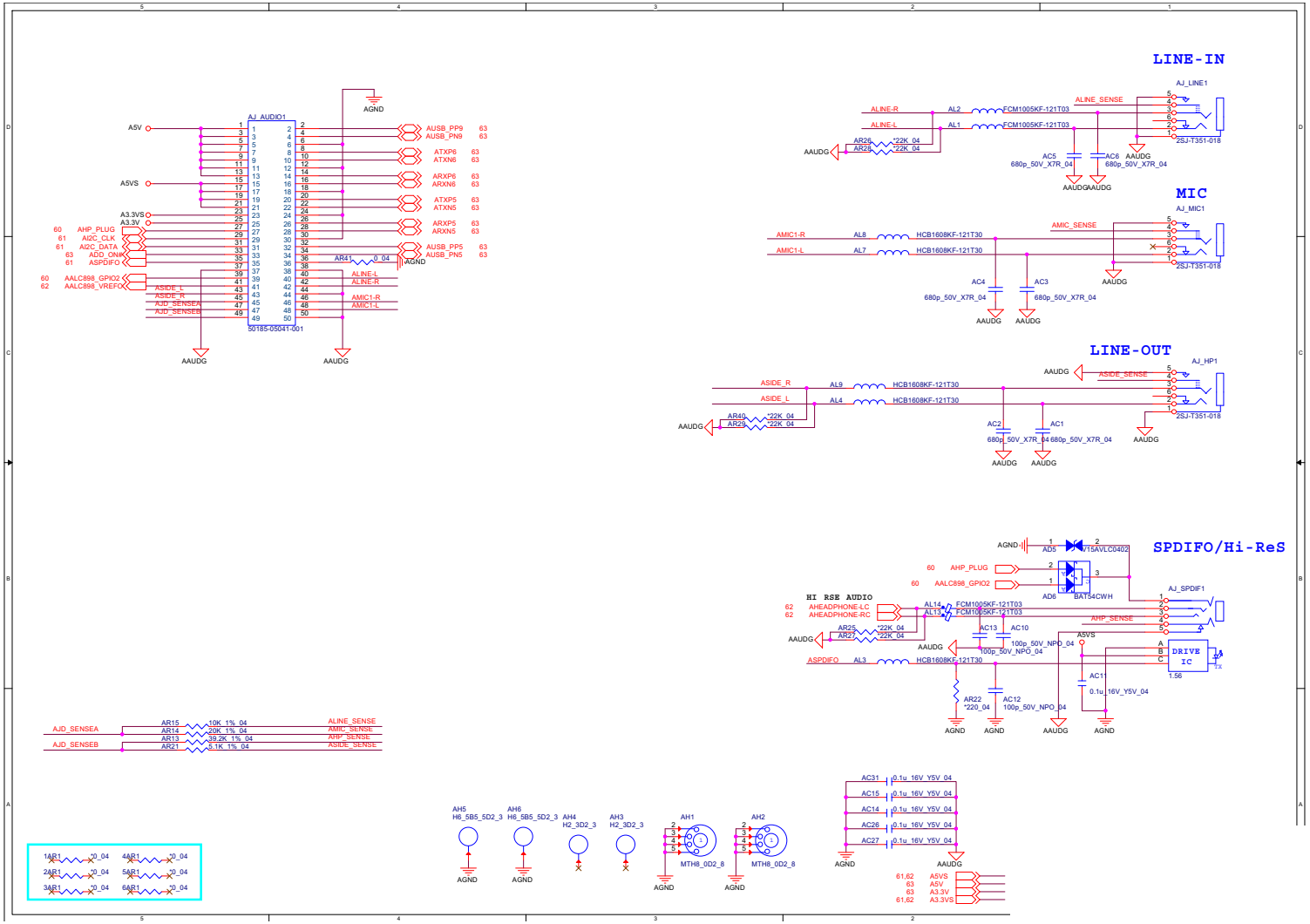

Sheet 60 of 69
P775DM Audio Board

P775DM Audio ESS DAC

Sheet 61 of 69
P775DM Audio
ESS DAC

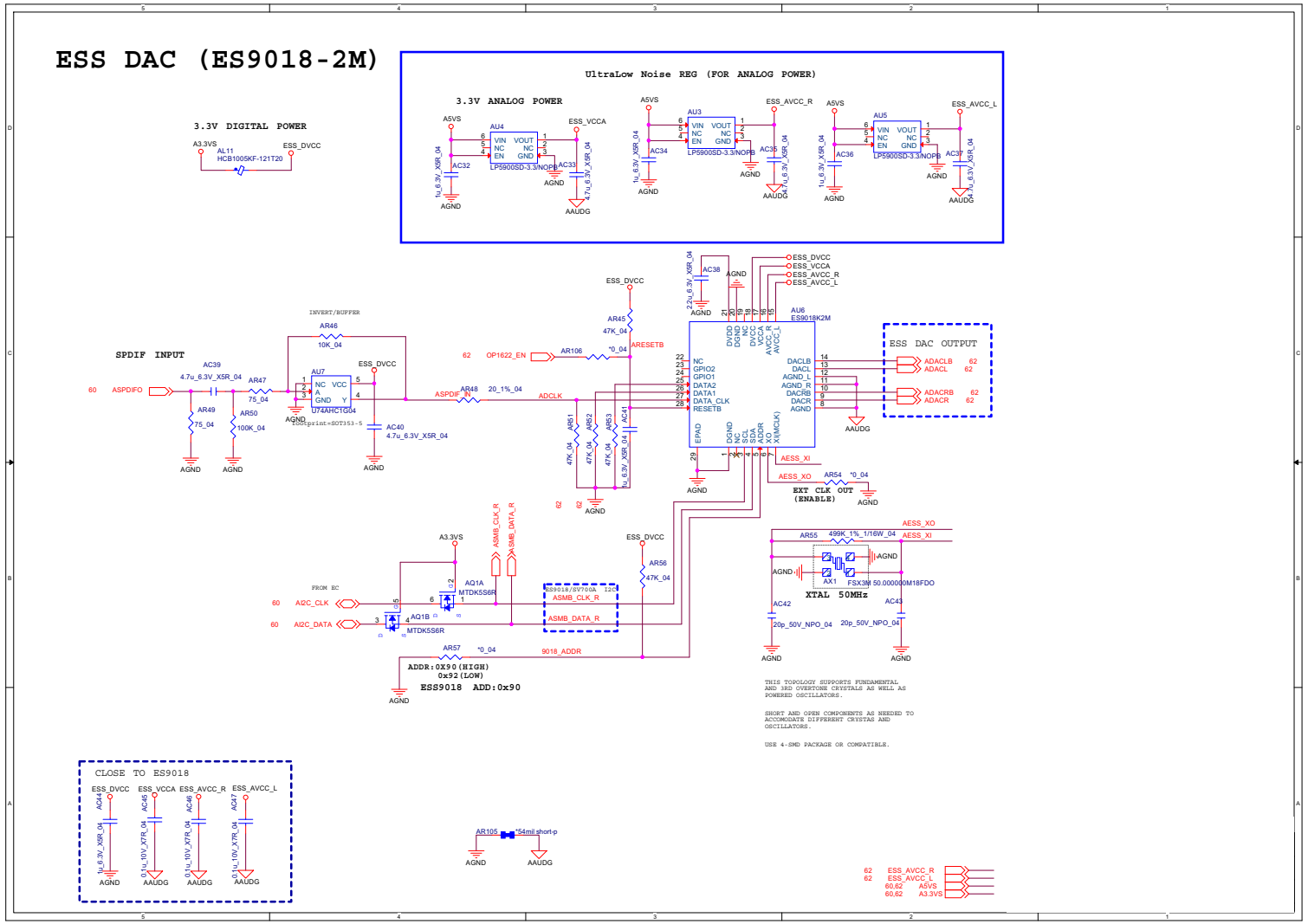

P775DM Audio HP AMP

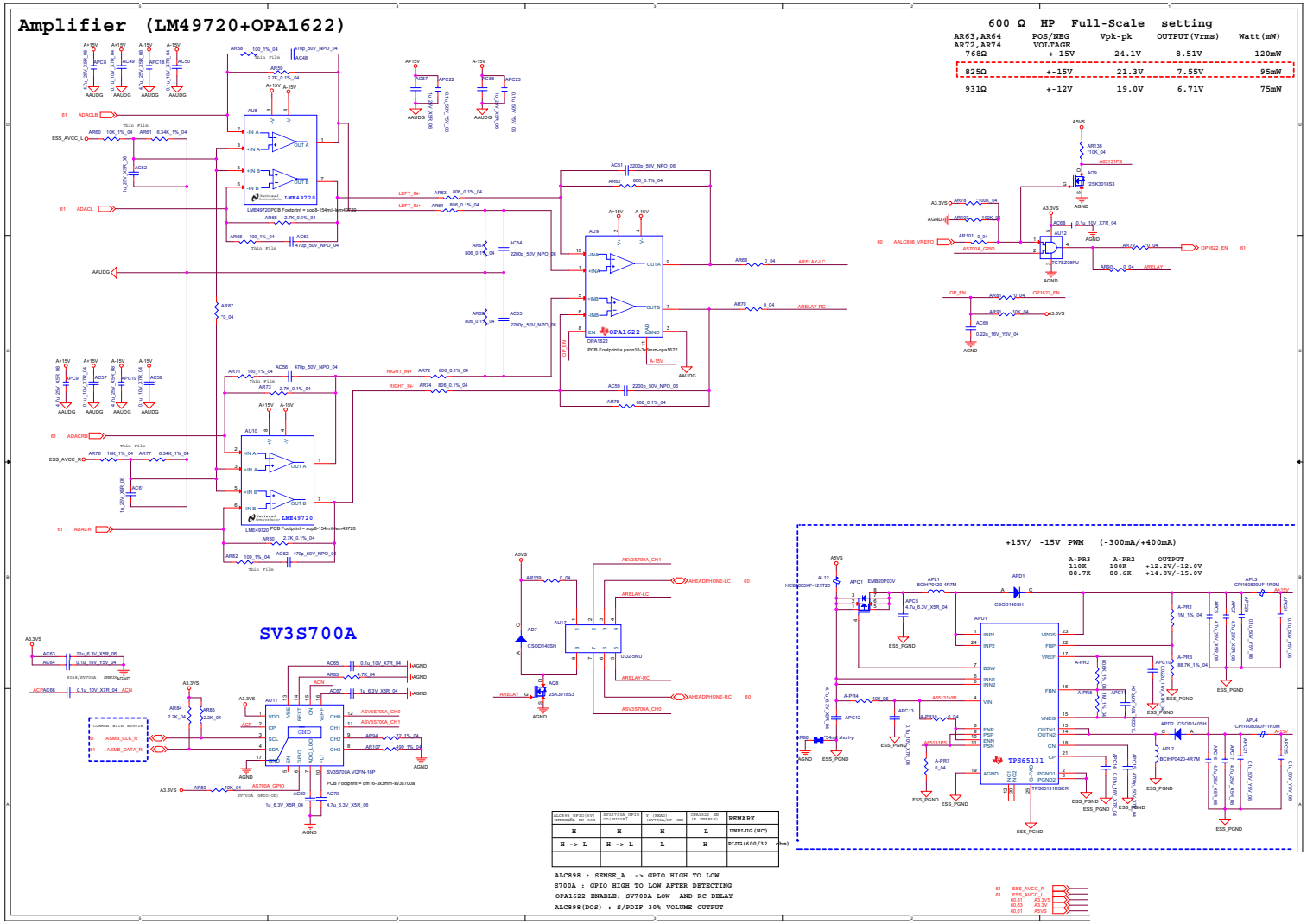

Sheet 62 of 69
P775DM Audio HP AMP

P775DM Audio Board

Sheet 63 of 69
P775DM Audio Board

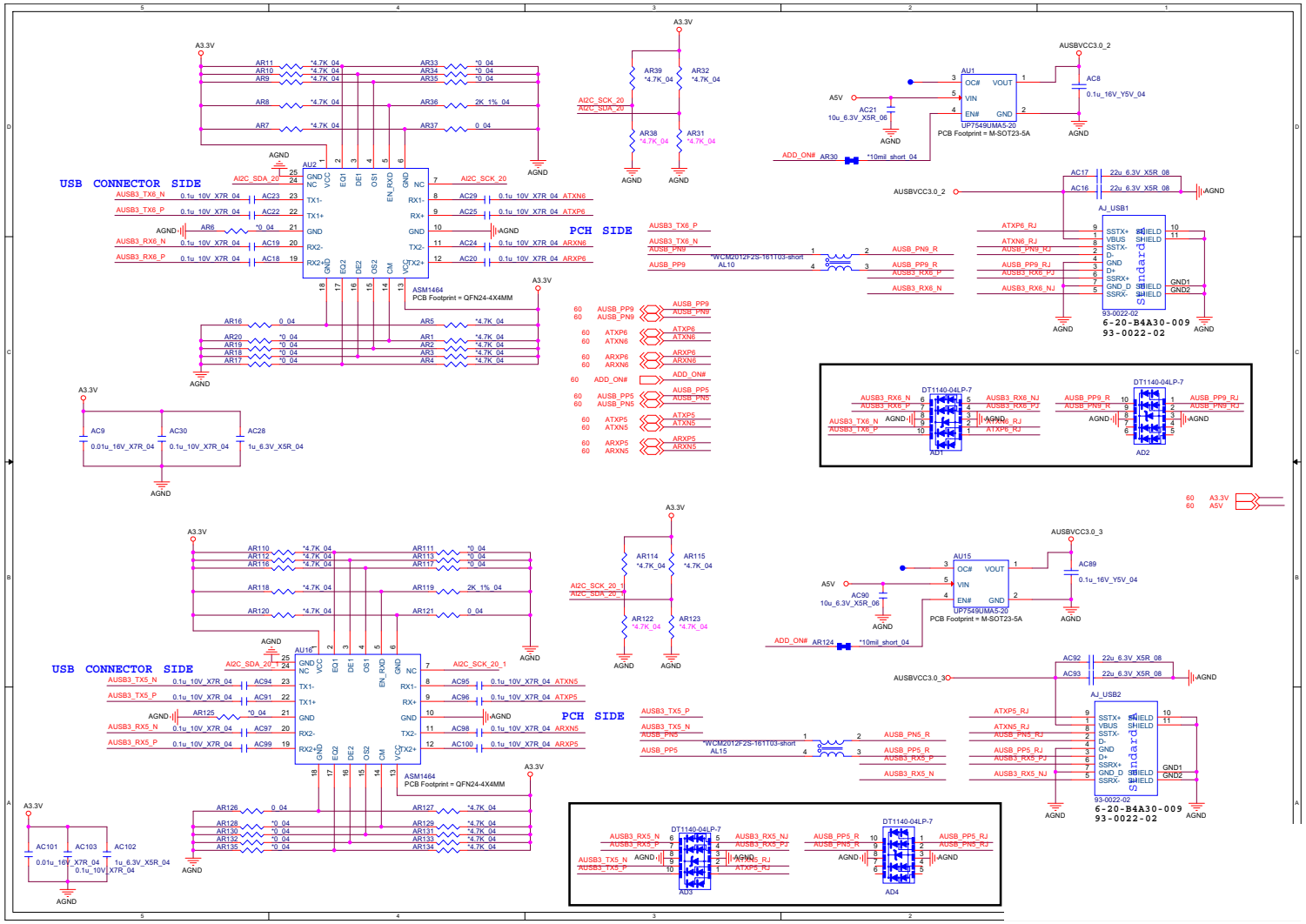

P750DM BOT LED Board

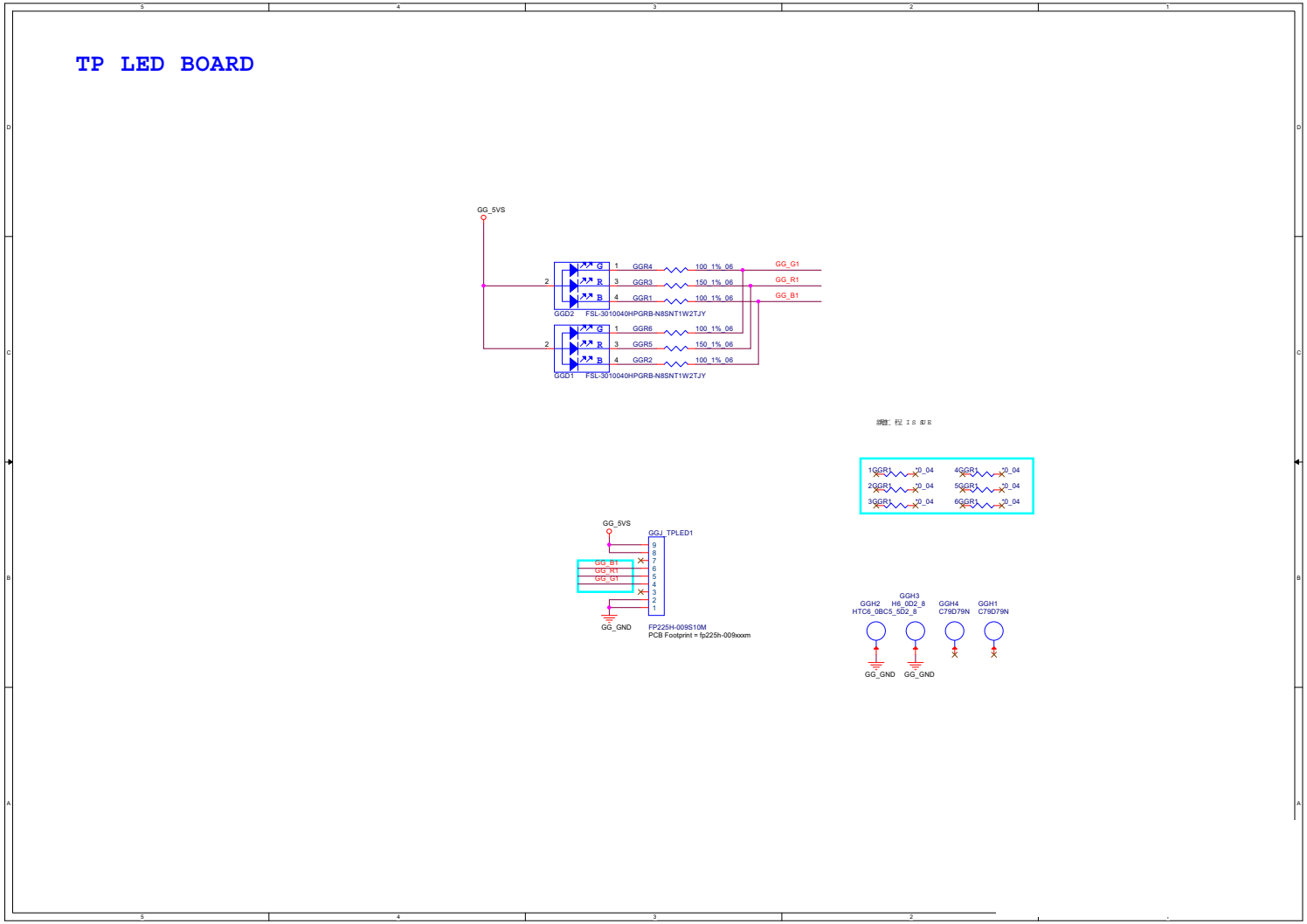

P750DM LID Switch Board

Sheet 65 of 69
P750DM LID Switch Board

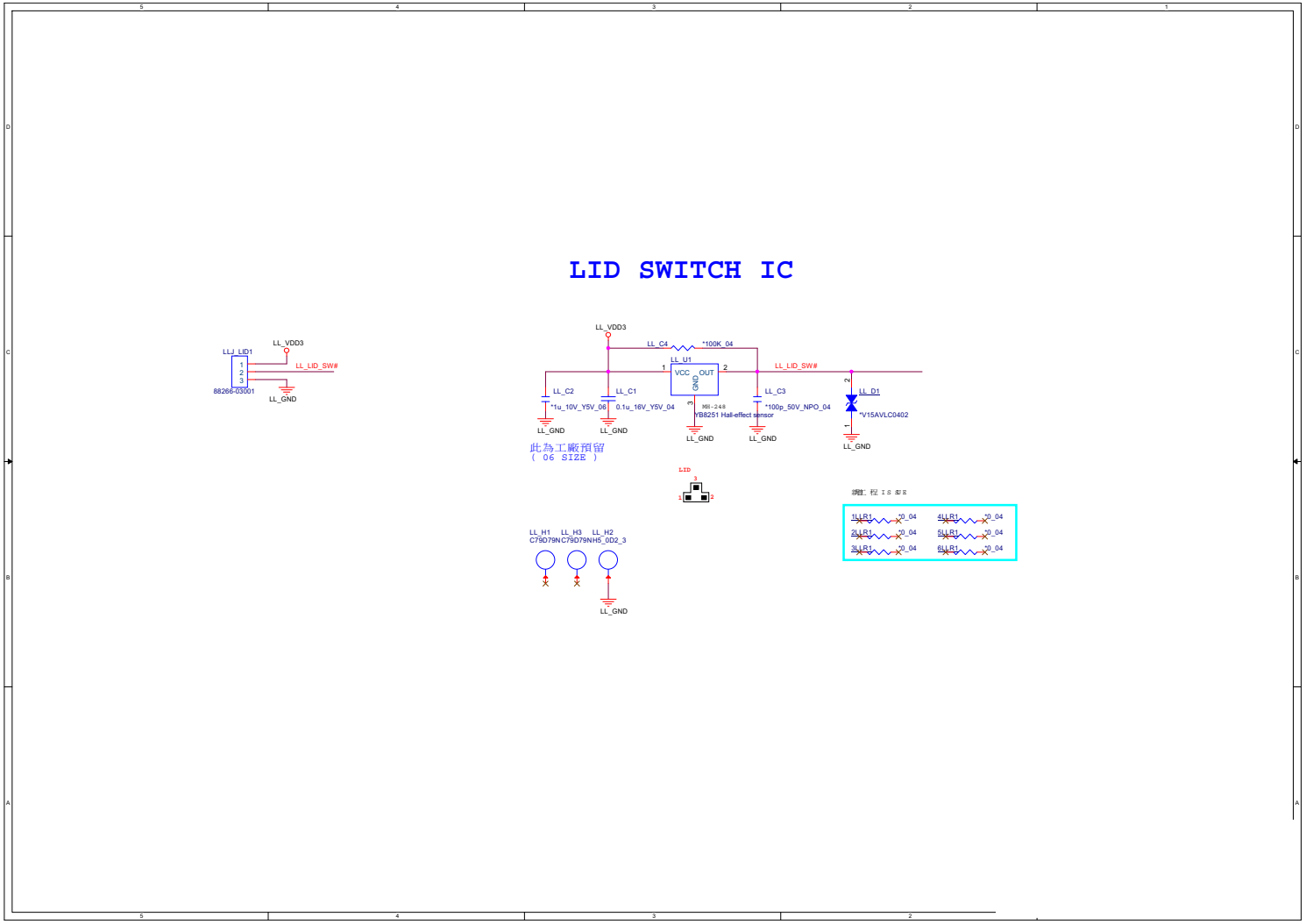

P750DM Charge LED Board

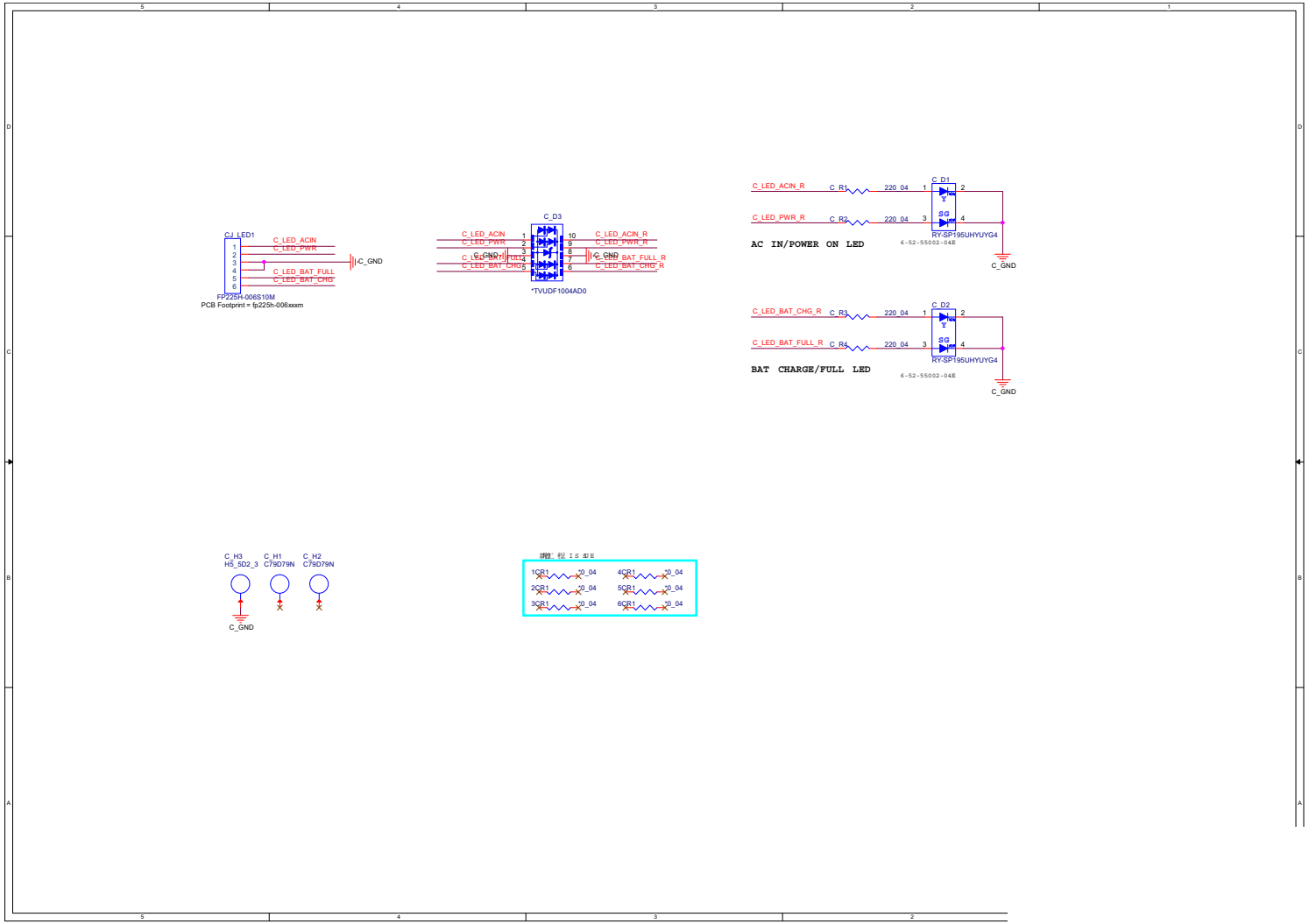

P775DM Charge LED Board

Sheet 67 of 69
P775DM Charge LED Board

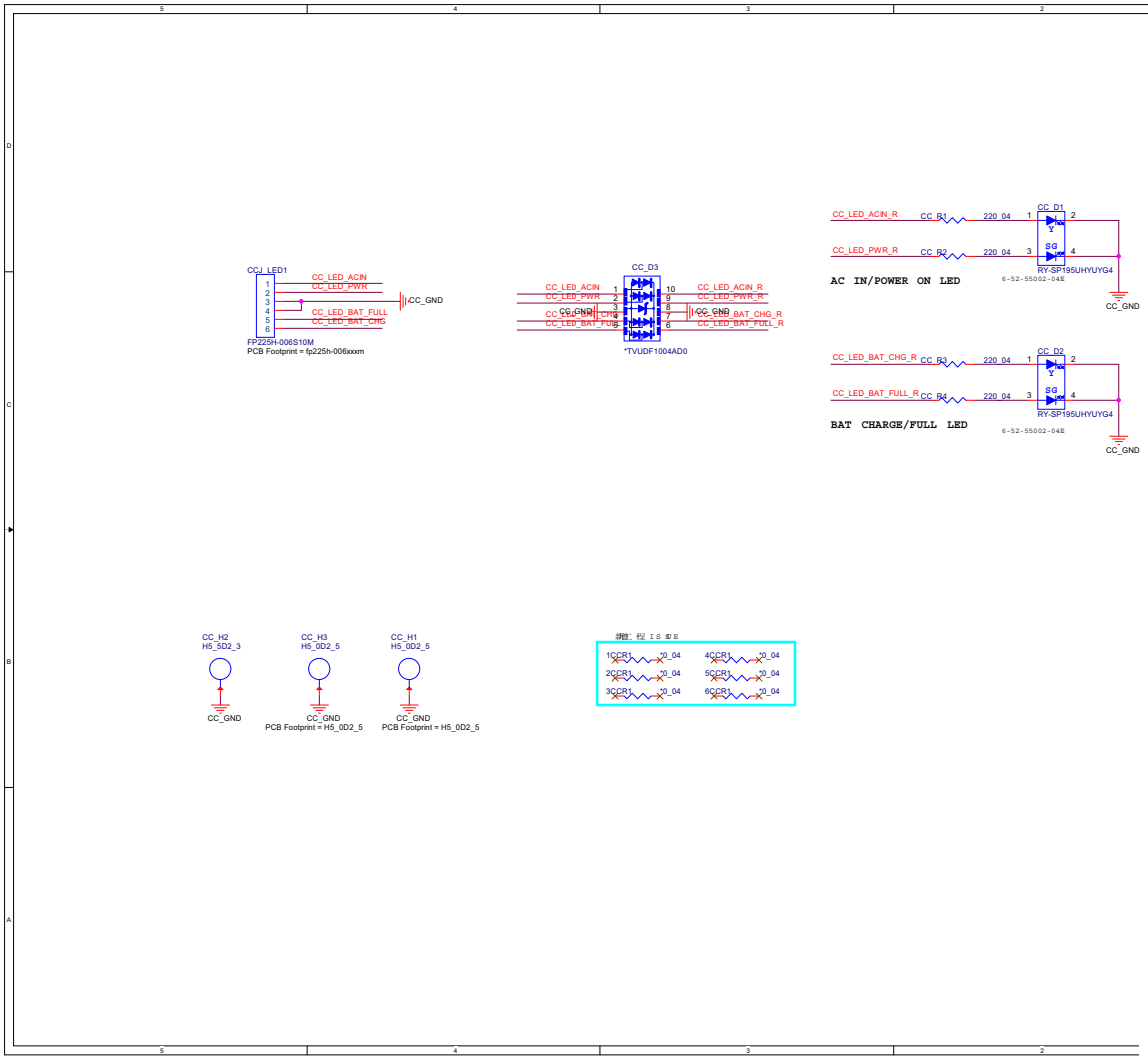

P775DM Power LED Board

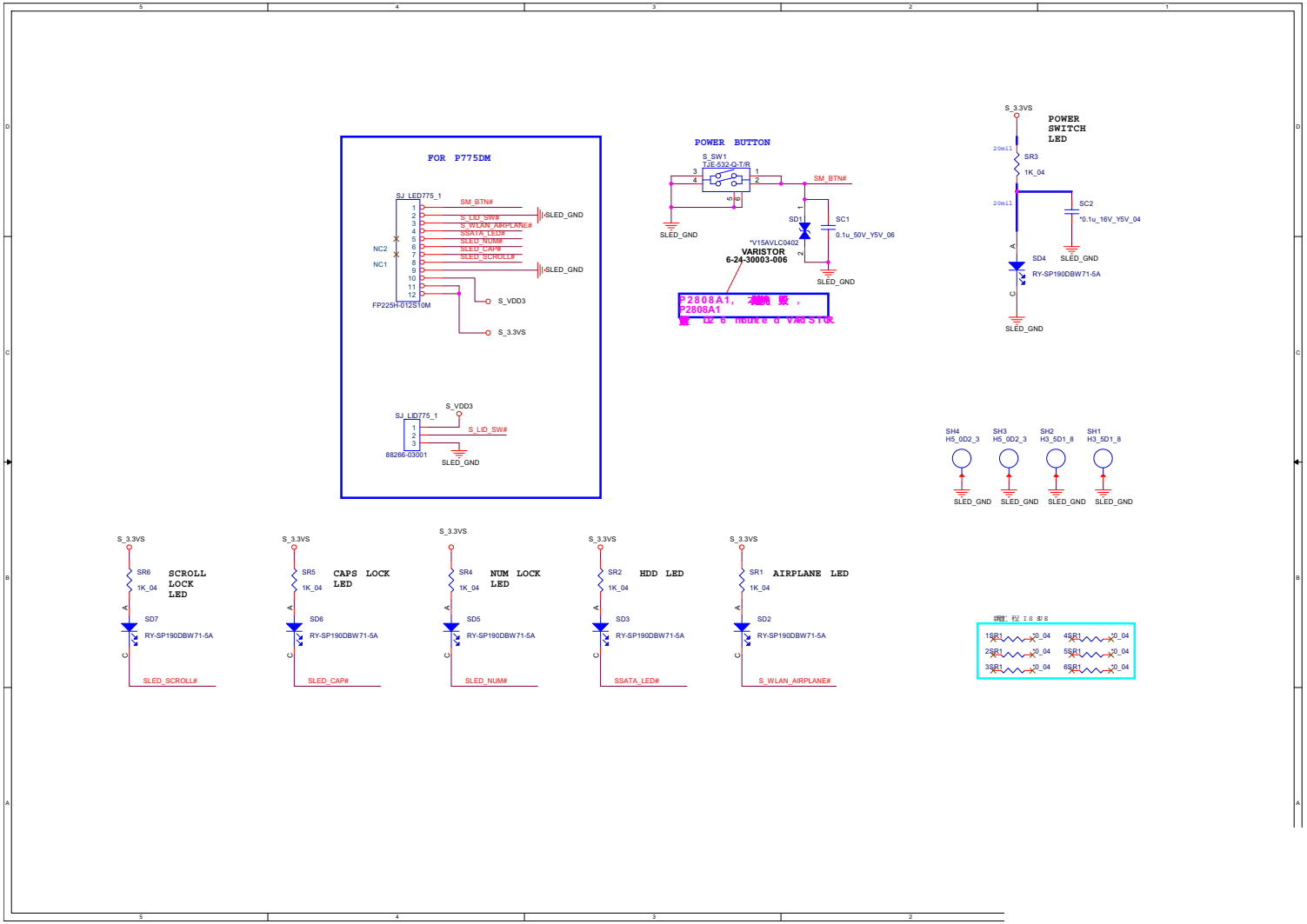

Power On Sequence

Sheet 69 of 69
Power On Sequence

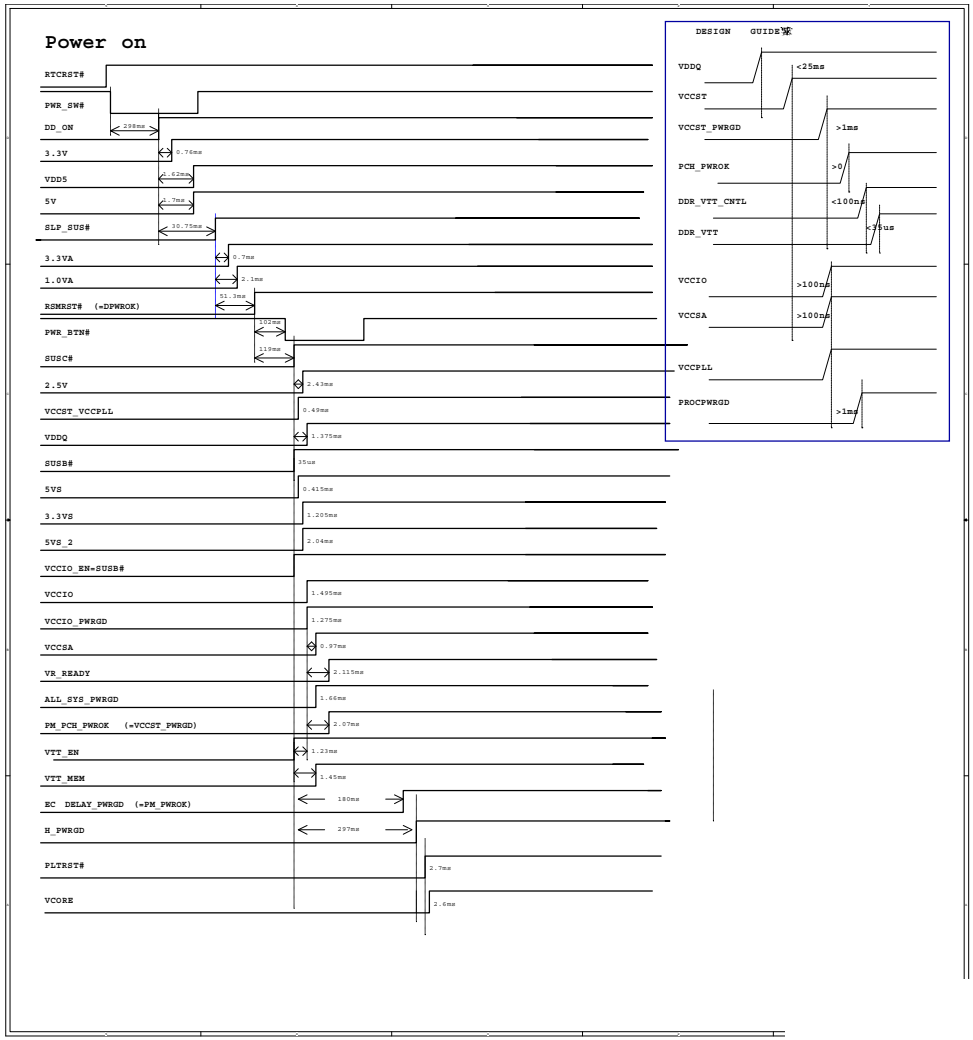

Appendix C:Updating the FLASH ROM BIOS

To update the FLASH ROM BIOS, you must:

- Download the BIOS update from the web site.
- Unzip the files onto a bootable CD/DVD/USB Flash Drive.
- Reboot your computer from an external CD/DVD/USB Flash Drive.
- Use the flash tools to update the flash BIOS using the commands indicated below.
- Restart the computer booting from the HDD and press **F2** at startup enter the BIOS.
- Load setup defaults from the BIOS and save the default settings and exit the BIOS to restart the computer.
- After rebooting the computer you may restart the computer again and make any required changes to the default BIOS settings.

Download the BIOS

1. Go to **www.clevo.com.tw** and point to **E-Services** and click **E-Channel**.
2. Use your user ID and password to access the appropriate download area (BIOS), and download the latest BIOS files (the BIOS file will be contained in a batch file that may be run directly once unzipped) for your computer model (**see sidebar for important information on BIOS versions**).

Unzip the downloaded files to a bootable CD/DVD/ or USB Flash drive

1. Insert a bootable CD/DVD/USB flash drive into the CD/DVD drive/USB port of the computer containing the downloaded files.
2. Use a tool such as Winzip or Winrar to unzip all the BIOS files and refresh tools to your bootable CD/DVD/USB flash drive (you may need to create a bootable CD/DVD with the files using a 3rd party software).

Set the computer to boot from the external drive

1. With the bootable CD/DVD/USB flash drive containing the BIOS files in your CD/DVD drive/USB port, restart the computer and press **F2** (in most cases) to enter the BIOS.
2. Use the arrow keys to highlight the **Boot** menu.
3. Use the "+" and "-" keys to move boot devices up and down the priority order.
4. Make sure that the CD/DVD drive/USB flash drive is set first in the boot priority of the BIOS.
5. Press **F4** to save any changes you have made and exit the BIOS to restart the computer.

BIOS Version

Make sure you download the latest correct version of the BIOS appropriate for the computer model you are working on.

You should only download BIOS versions that are V1.0X.XX or higher as appropriate for your computer model.

Note that BIOS versions are not backward compatible and therefore **you may not downgrade your BIOS to an older version** after upgrading to a later version (e.g if you upgrade a BIOS to ver 1.0X.05, you **MAY NOT** then go back and flash the BIOS to ver 1.0X.04).

Use the flash tools to update the BIOS

1. Make sure you are not loading any memory management programs such as HIMEM by holding the **F8** key as you see the message "**Starting MS-DOS**". You will then be prompted to give "**Y**" or "**N**" responses to the programs being loaded by DOS. Choose "N" for any memory management programs.
2. You should now be at the DOS prompt e.g: DISK **C**:\> (C is the designated drive letter for the CD/DVD drive/USB flash drive).
3. **Type the following command** at the DOS prompt:

   C:\> Flash.bat

4. The utility will then proceed to flash the BIOS.
5. You should then be prompted to press any key to restart the system or turn the power off, and then on again but make sure you remove the CD/DVD/USB flash drive from the CD/DVD drive/USB port before the computer restarts.

Restart the computer (booting from the HDD)

1. With the CD/DVD/USB flash drive removed from the CD/DVD drive/USB port the computer should restart from the HDD.
2. Press **F2** as the computer restarts to enter the BIOS.
3. Use the arrow keys to highlight the **Exit** menu.
4. Select **Load Setup Defaults** (or press **F3**) and select "**Yes**" to confirm the selection.
5. Press **F4** to save any changes you have made and exit the BIOS to restart the computer.

Your computer is now running normally with the updated BIOS

You may now enter the BIOS and make any changes you require to the default settings.

Other ManualsLib Projects

www.manualslib.com

www.manualslib.de

www.manualslib.es

www.manualslib.fr

www.manualslib.nl

www.manualslib.mx

www.manualslib.tech 30+ Languages