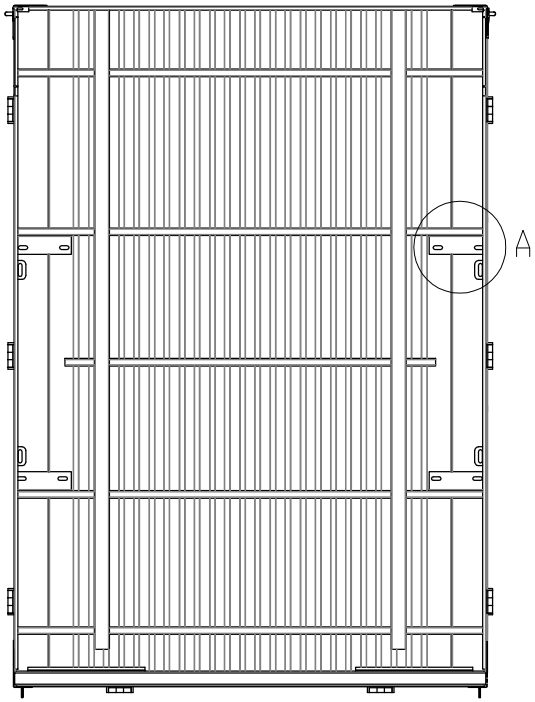

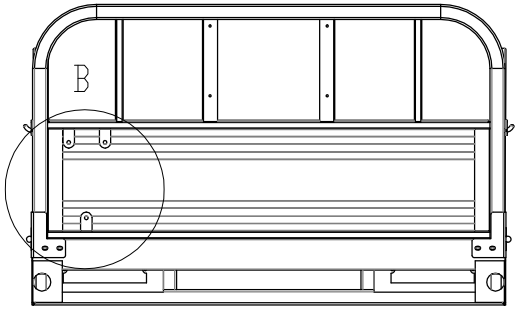

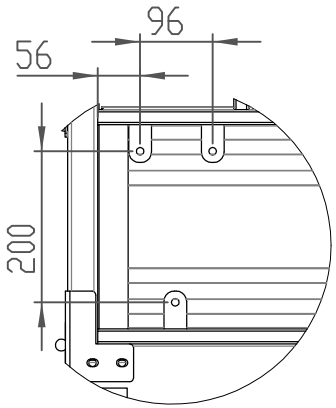

DETAIL B
SCALE 1 : 10

DETAIL PEMASANGAN BRACKET TEMPAT DUDUK SAMPING

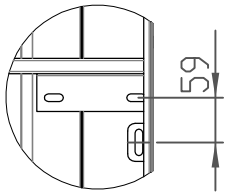

DETAIL A
SCALE 1 : 10

DETAIL PEMASANGAN BRACKET SPAKBOR

NO	REVISION	DATE	CHECKED	MATERIAL	SCALE	APPROVED	CHECKED	DRAWN
				-	1 : 20	AGUNG TH	KHABIB M	BUDI 17-01-2017
				Mc PRESS -	PART NAME ASSY BRACKET SPAKBOR			
					PART NO -			
				3RD ANGLE PROJECTION	TOOL NAME -			
					MAT'L NO.	PO NO		
PT MEKAR ARMADA JAYA					MODEL VIAR	SHEET NO -		A4