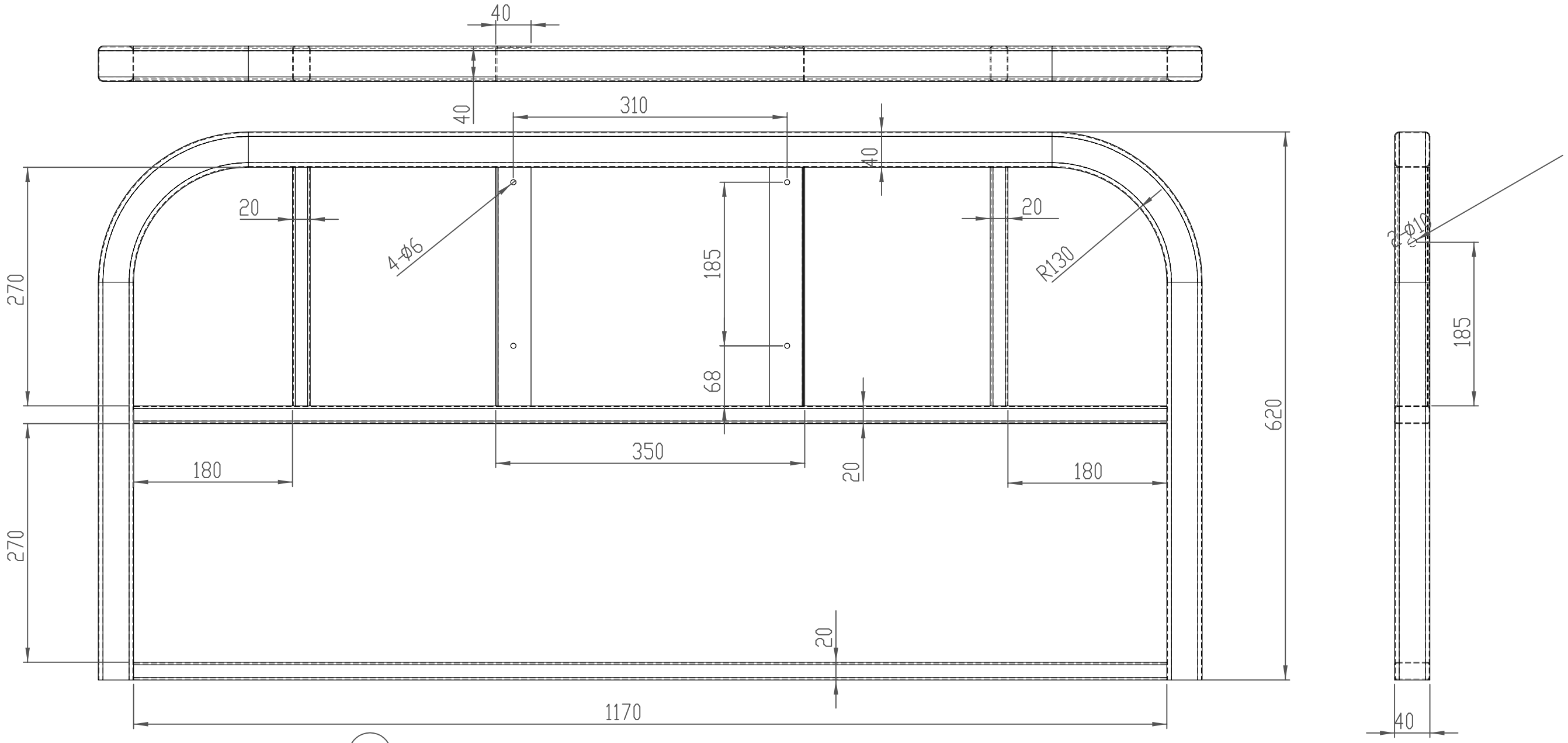

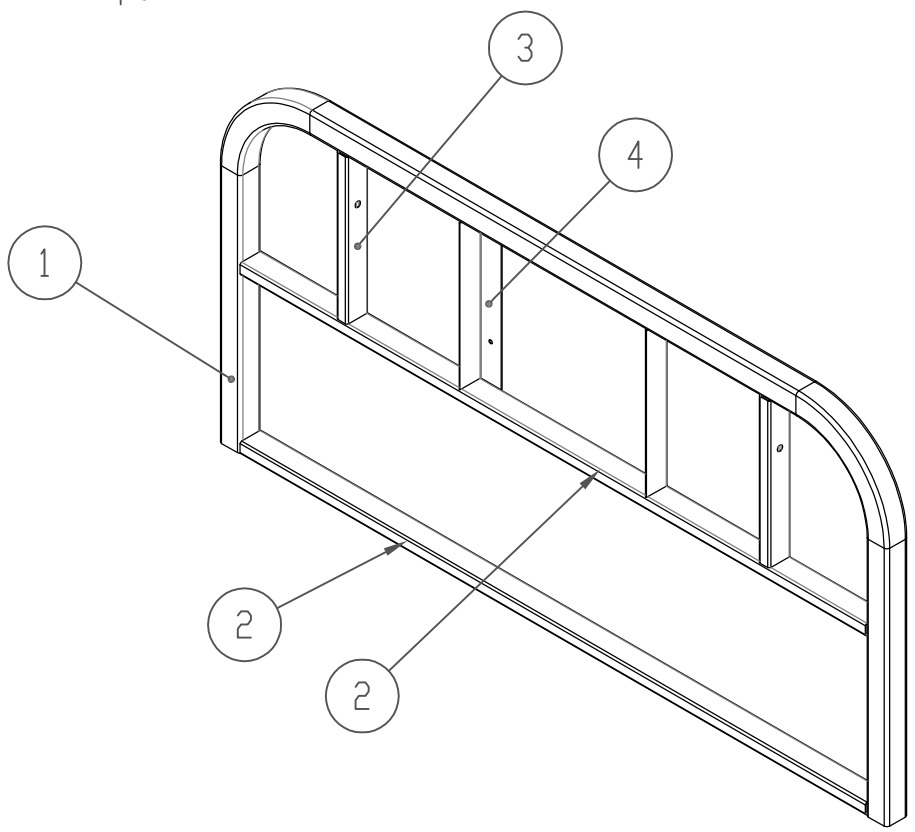

No. SHEET	No.	NAME	MT'L	DIMENSION	Q'TY	HEAT	REMARKS
	4	FRAME	PLAT L	40X40X270	2		
	3	FRAME	PIPA	40X20X270	2		
	2	FRAME	PIPA	40X20X1170	2		
	1	FRAME	PIPA	40X40X(2218)	1		

NO	REVISION	DATE	CHECKED

MATERIAL	SCALE	APPROVED	CHECKED	DRAWN
t: 0,9 -	1 : 2	AGUNG TH	KHABIB M	BUDI 12-01-2017

QTY/UNIT: 1

PART NAME: RANGKA DEK DEPAN

PART NO: -

3RD ANGLE PROJECTION

TOOL NAME: -

MAT'L NO.:

PO NO:

PT MEKAR ARMADA JAYA

MODEL: VIAR

SHEET NO: -

A3