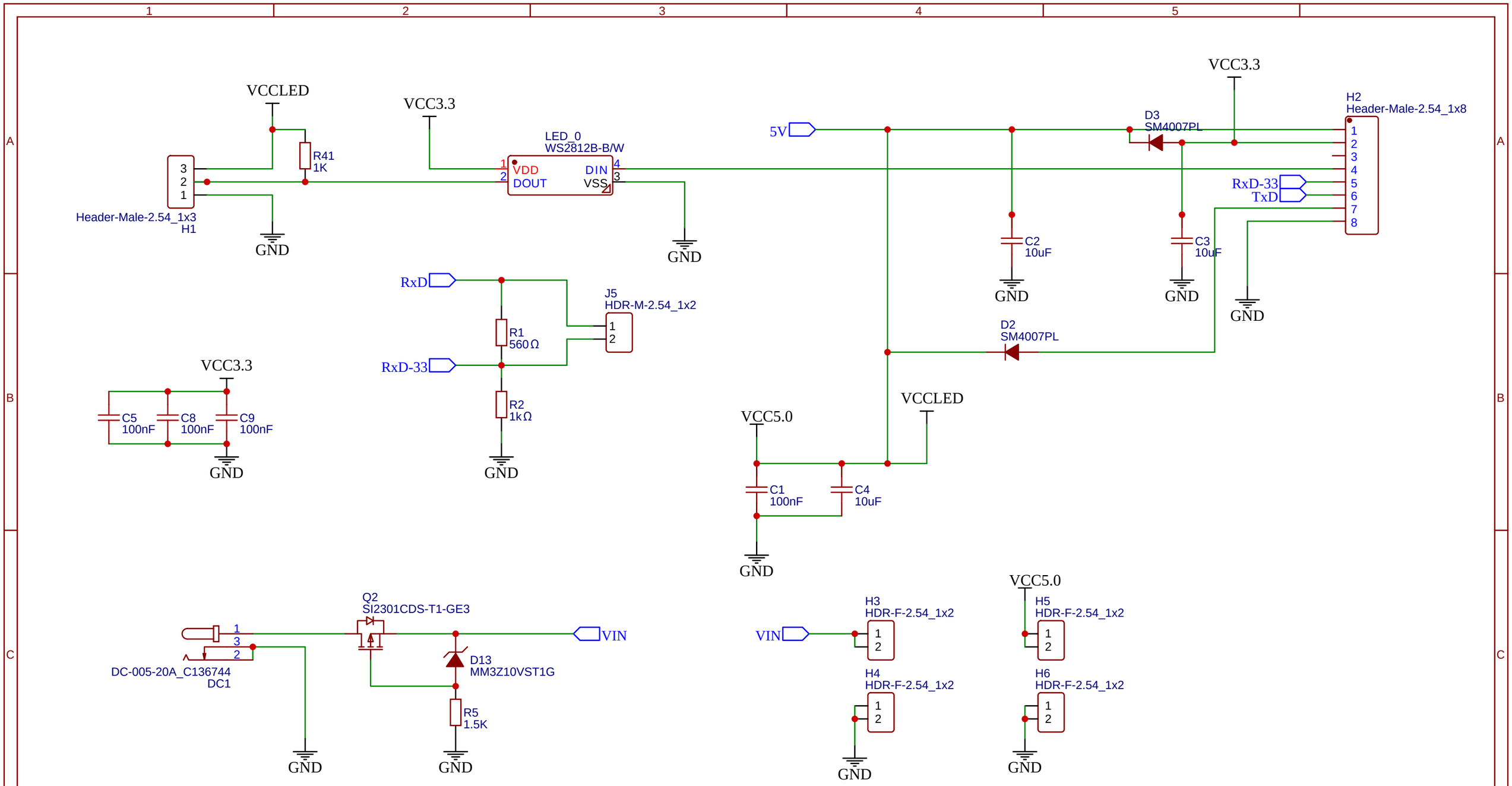

TITLE: RedHat++ Shield		REV: 0.9
	Company: IoTT - Internet of Toy Trains	Sheet: 1/6
	Date: 2021-09-05 Drawn By: Hans R. Tanner	

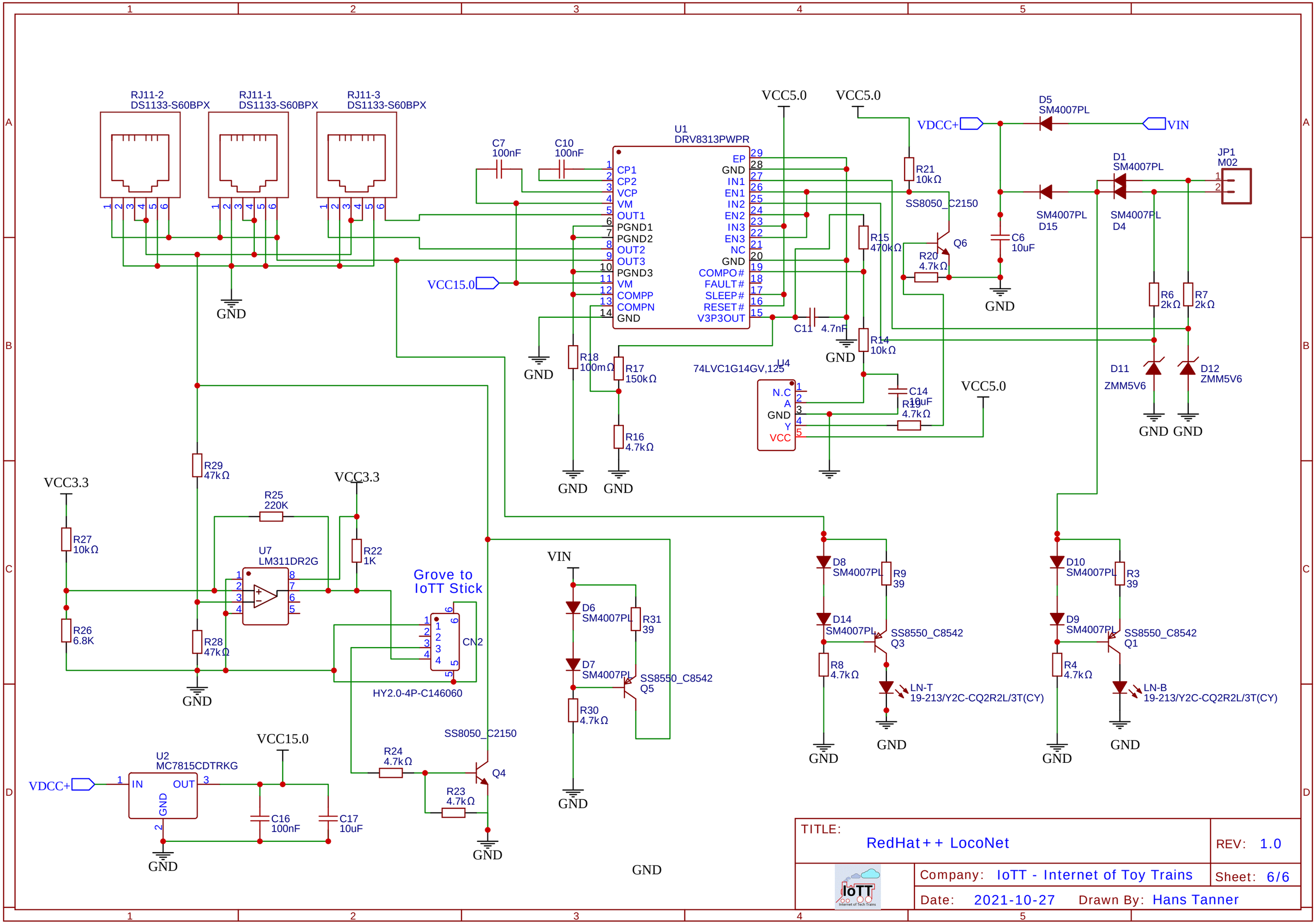
RJ11-2
DS1133-S60BPX
RJ11-1
DS1133-S60BPX
RJ11-3
DS1133-S60BPX
U1
DRV8313PWPR
CP1
CP2
VCP
VM
OUT1
PGND1
PGND2
OUT2
OUT3
PGND3
VM
COMPP
COMPN
GND
EP
GND
IN1
EN1
IN2
EN2
IN3
EN3
NC
GND
COMPO#
FAULT#
SLEEP#
RESET#
V3P3OUT
C7
100nF
C10
100nF
VCC15.0
VCC5.0
VCC5.0
VDCC+
VIN
D5
SM4007PL
D1
SM4007PL
JP1
M02
R21
10kΩ
SS8050_C2150
Q6
R20
4.7kΩ
R15
470kΩ
C6
10uF
SM4007PL
D15
SM4007PL
D4
R6
2kΩ
R7
2kΩ
C11
4.7nF
R14
10kΩ
R18
100mΩ
R17
150kΩ
R16
4.7kΩ
U4
74LVC1G14GV,125
N.C
A
GND
Y
VCC
C14
10uF
R19
4.7kΩ
D11
ZMM5V6
D12
ZMM5V6
GND
VCC3.3
R29
47kΩ
R25
220K
R27
10kΩ
U7
LM311DR2G
R22
1K
R26
6.8K
R28
47kΩ
Grove to
IoTT Stick
CN2
HY2.0-4P-C146060
VIN
D6
SM4007PL
R31
39
D7
SM4007PL
SS8550_C8542
Q5
R30
4.7kΩ
D8
SM4007PL
R9
39
D14
SM4007PL
SS8550_C8542
Q3
R8
4.7kΩ
LN-T
19-213/Y2C-CQ2R2L/3T(CY)
D10
SM4007PL
R3
39
D9
SM4007PL
SS8550_C8542
Q1
R4
4.7kΩ
LN-B
19-213/Y2C-CQ2R2L/3T(CY)
VCC15.0
U2
MC7815CDTRKG
VDCC+
IN
OUT
GND
C16
100nF
C17
10uF
R24
4.7kΩ
SS8050_C2150
Q4
R23
4.7kΩ
TITLE:
RedHat++ LocoNet
REV: 1.0
Company: IoTT - Internet of Toy Trains
Sheet: 6/6
Date: 2021-10-27
Drawn By: Hans Tanner

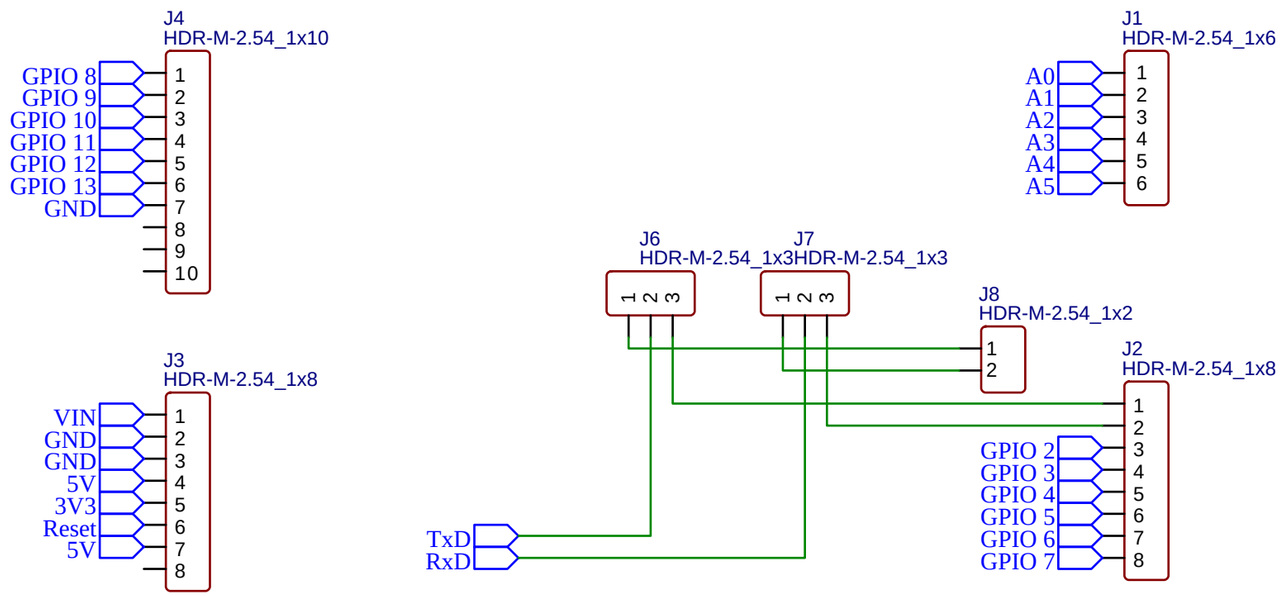

TITLE: RedHat++ Shield	REV: 1.0
Company: IoTT - Internet of Toy Trains	Sheet: 1/1
Date: 2022-04-23 Drawn By: Hans Tanner	