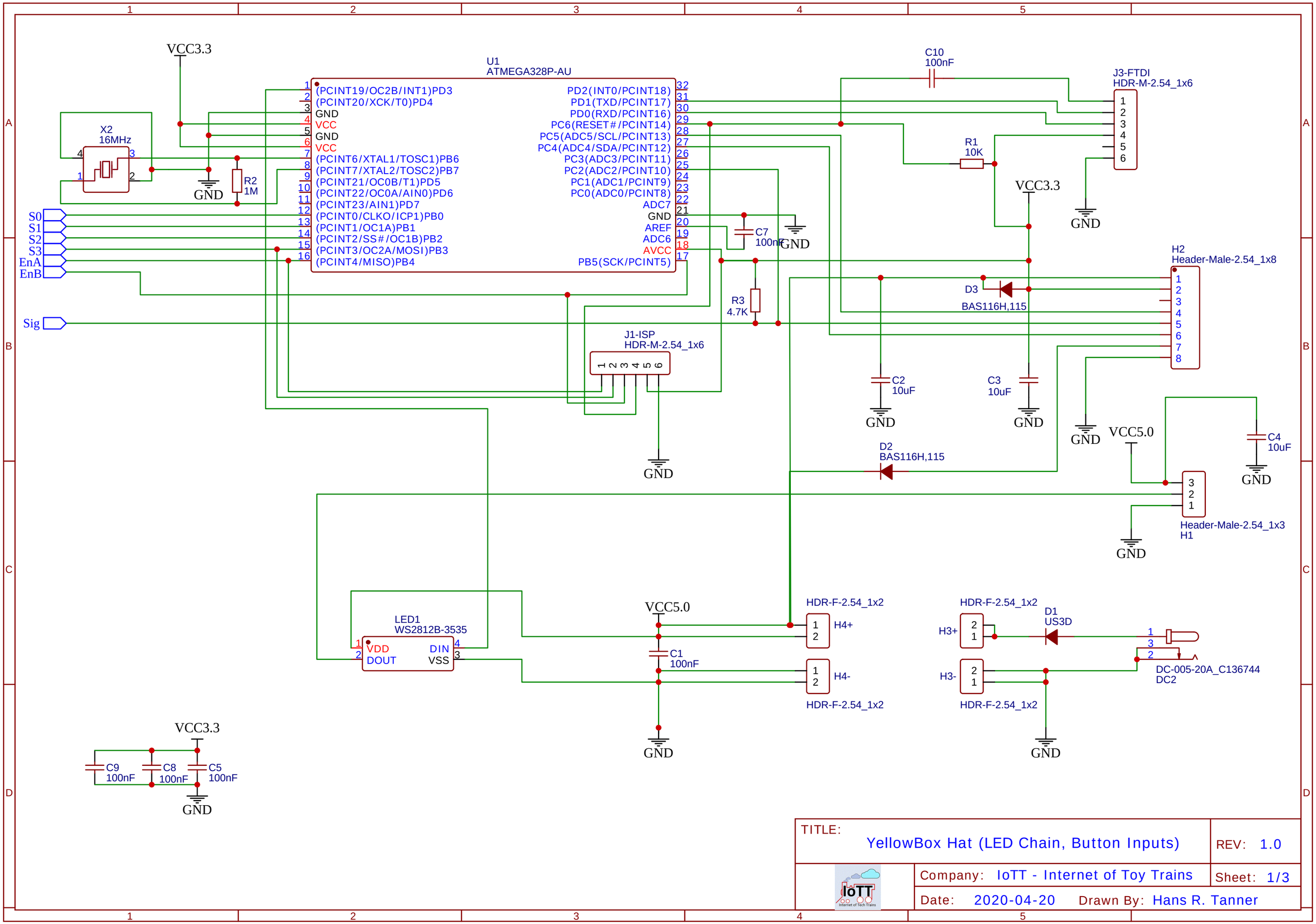

TITLE: YellowBox Hat (LED Chain, Button Inputs)

REV: 1.0

Company: IoTT - Internet of Toy Trains

Sheet: 1/3

Date: 2020-04-20

Drawn By: Hans R. Tanner

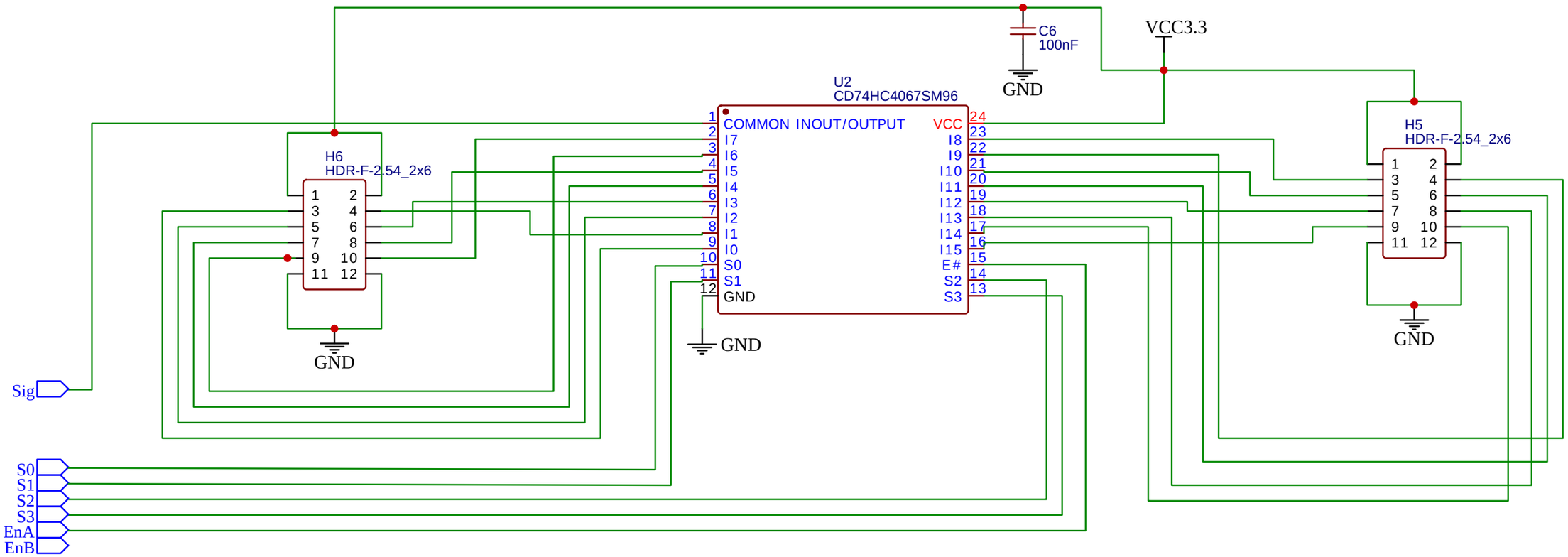

TITLE: YellowBox Hat (LED Chain, Button Inputs)

REV: 1.0

Company: IoTT - Internet of Toy Trains

Sheet: 2/3

Date: 2020-04-20

Drawn By: Hans R. Tanner

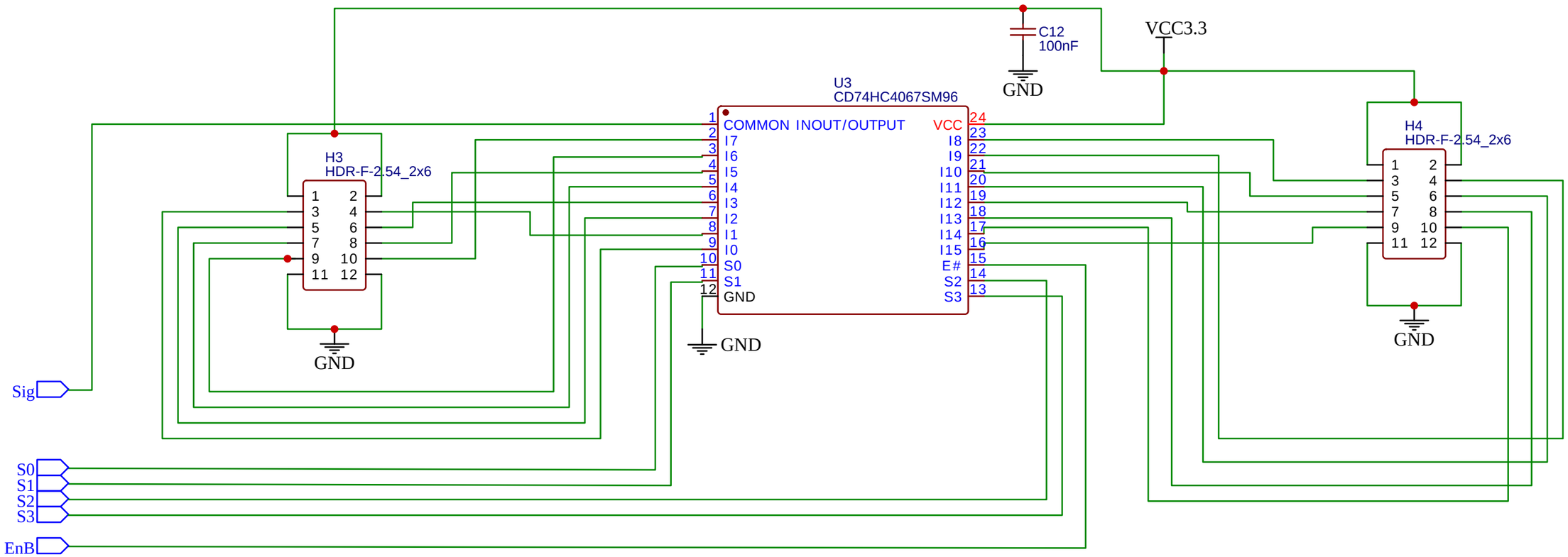

TITLE: YellowBox Hat (LED Chain, Button Inputs)

REV: 1.0

Company: IoTT - Internet of Toy Trains

Sheet: 3/3

Date: 2020-04-20

Drawn By: Hans R. Tanner