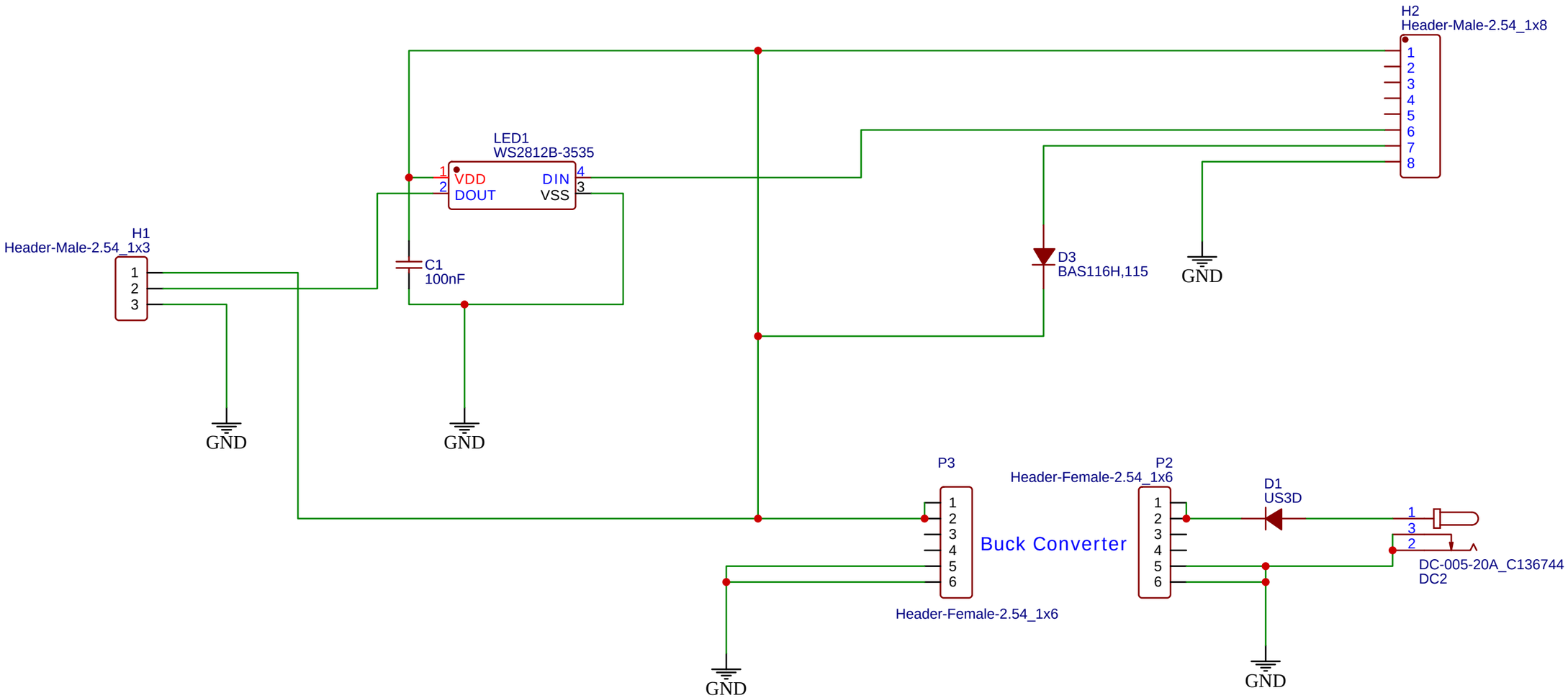

TITLE: Iott Stick M5 LED Chain Module

REV: 1.0

Company: IoTT - Internet of Toy Trains

Sheet: 1/1

Date: 2020-03-31

Drawn By: Hans R. Tanner