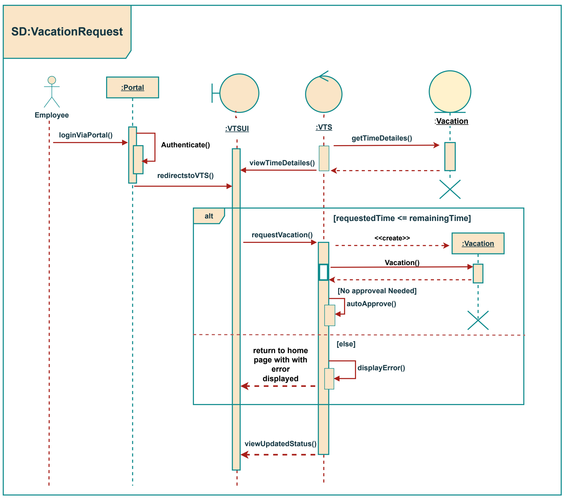
SD:VacationRequest
Employee
:Portal
:VTSUI
:VTS
:Vacation
loginViaPortal()
Authenticate()
redirectstoVTS()
getTimeDetailes()
viewTimeDetailes()
alt
[requestedTime <= remainingTime]
requestVacation()
<<create>>
:Vacation
Vacation()
[No approveal Needed]
autoApprove()
[else]
return to home page with error displayed
displayError()
viewUpdatedStatus()

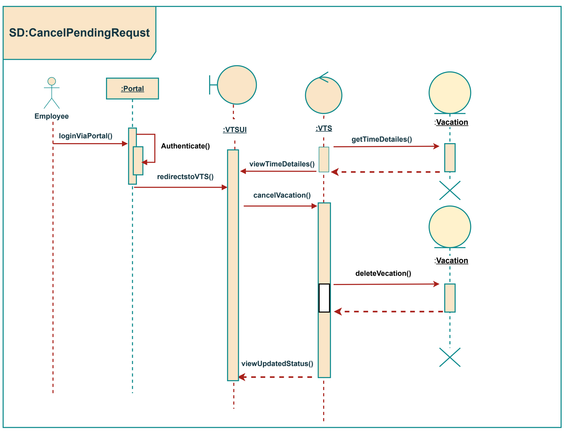
SD:CancelPendingRequst
Employee
:Portal
:VTSUI
:VTS
:Vacation
loginViaPortal()
Authenticate()
redirectstoVTS()
getTimeDetailes()
viewTimeDetailes()
cancelVacation()
deleteVecation()
viewUpdatedStatus()

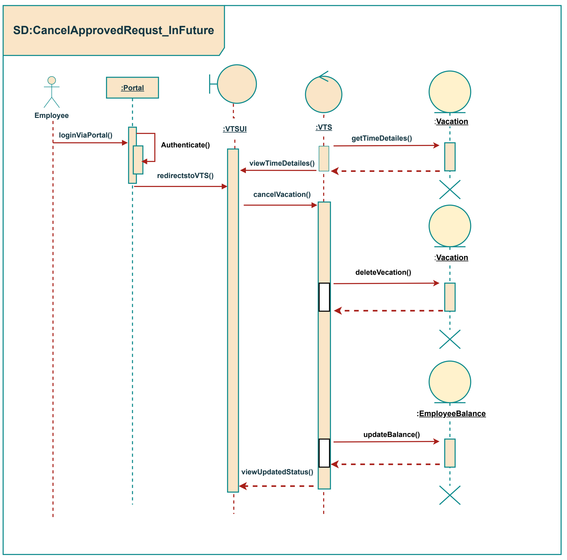
SD:CancelApprovedRequst_InFuture
Employee
:Portal
:VTSUI
:VTS
:Vacation
:EmployeeBalance
loginViaPortal()
Authenticate()
redirectstoVTS()
getTimeDetailes()
viewTimeDetailes()
cancelVacation()
deleteVecation()
updateBalance()
viewUpdatedStatus()

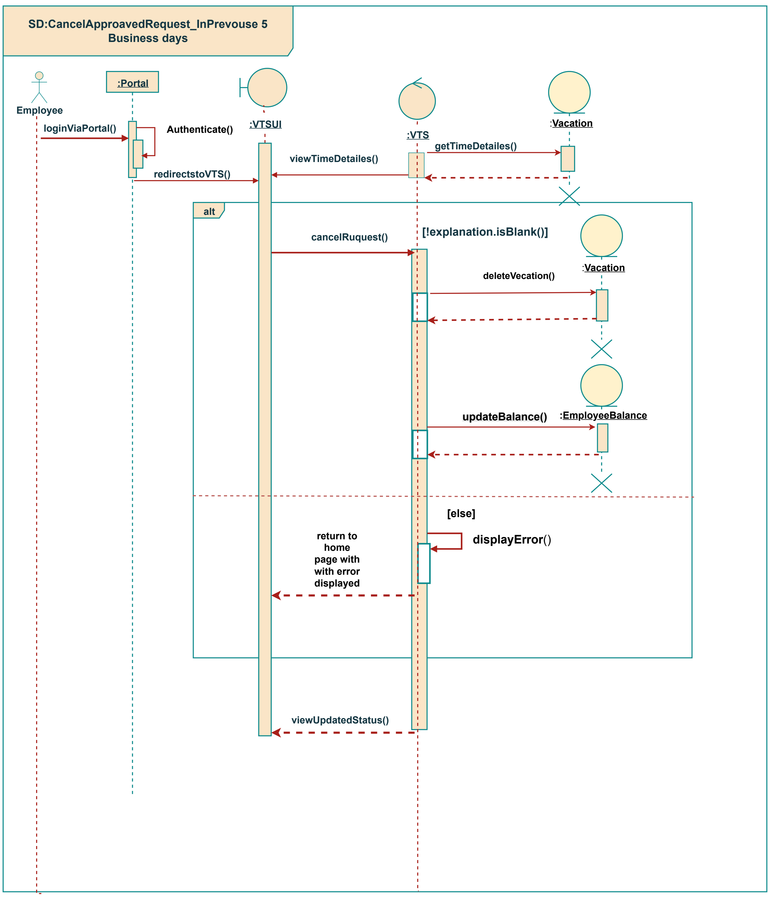
SD:CancelApproavedRequest_InPrevouse 5 Business days
Employee
:Portal
:VTSUI
:VTS
:Vacation
:EmployeeBalance
loginViaPortal()
Authenticate()
redirectstoVTS()
viewTimeDetailes()
getTimeDetailes()
alt
[!explanation.isBlank()]
cancelRuquest()
deleteVecation()
updateBalance()
[else]
displayError()
return to home page with with error displayed
viewUpdatedStatus()