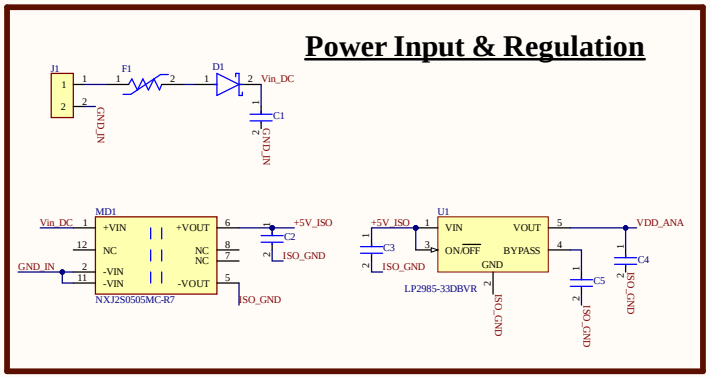

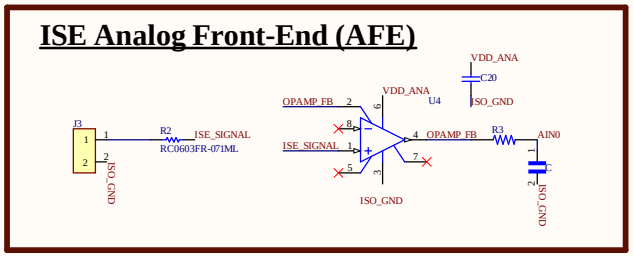

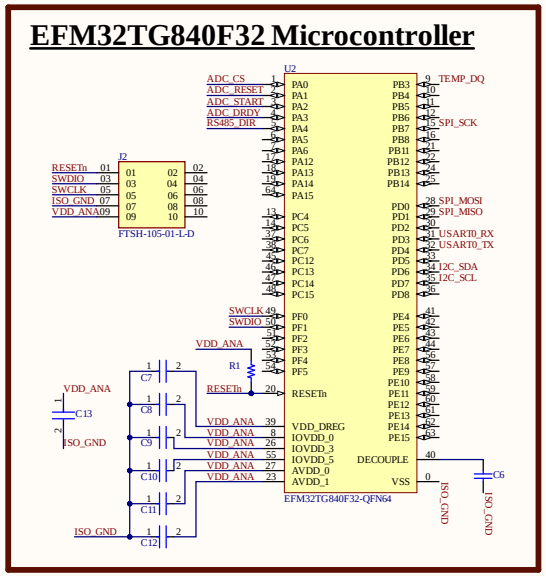

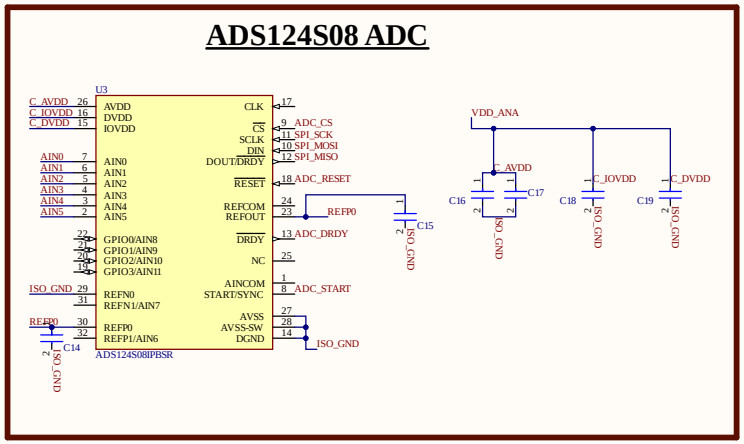

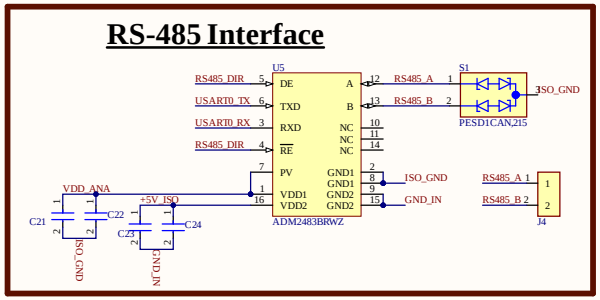

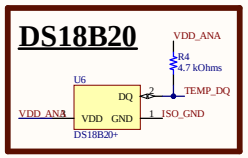

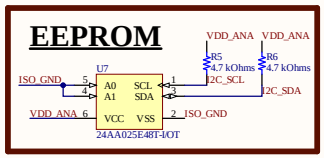

Title: ISE-to-Modbus-RTU-Converter		
Size: C	Number: 01	Revision
Date: 7/21/2025		Sheet of
File: E:\GitHub\..\Schematics.SchDoc		Drawn By: Ali Hassan