Applied Intelligence

Enhancing human-robot interaction safety: Integrated neural network models for accurate facial expression detection in intelligent meal-assisting robotics

--Manuscript Draft--

Manuscript Number:	APIN-D-24-10483
Full Title:	Enhancing human-robot interaction safety: Integrated neural network models for accurate facial expression detection in intelligent meal-assisting robotics
Article Type:	Original Submission
Keywords:	Intelligent meal-assisting robotics; human-robot interaction; facial expression analysis; dysphagia intensity; integrated neural network model
Abstract:	Real-time and accurate facial dysphagia intensity classification is critical for enhancing safety and effectiveness in human-robot interaction (HRI), especially within the context of intelligent meal-assisting robotics. Traditional single deep neural network models, however, often struggle to capture subtle facial changes and sequential information, leading to inaccuracies in hierarchical dysphagia intensity classification. To address these challenges, this paper proposes an advanced Integrated Neural Network Model (INNM) designed for real-time detection of dysphagia intensity levels from facial video frames. The INNM architecture comprises two key components: a feature extraction network and a converged CNN-ConvBiLSTM network. In the feature extraction stage, we enhance the YOLOv8s-cls architecture with deformable convolutions to better capture fine spatial details of facial expressions. This enhancement allows for more precise identification of subtle facial cues. Additionally, the CloFormer attention mechanism is integrated to effectively perceive both local high-frequency and global low-frequency information, thereby improving the model's sensitivity to nuanced facial changes. In the converged CNN-ConvBiLSTM network, we propose a novel algorithm that combines a three-layer hybrid CNN with ConvBiLSTM, employing a jumping-connection strategy. This approach significantly strengthens the model's ability to handle long-term and short-term temporal sequences, while also enhancing its capacity to integrate and interact with spatial information. The jumping connections improve the memorization ability of the model, making it more robust in processing complex time-series data. Extensive experiments demonstrate that the INNM outperforms baseline models and current state-of-the-art methods in dysphagia intensity classification, achieving remarkable accuracy. Ablation studies further validate the effectiveness of each component enhancement, confirming the model's superior performance. This research not only advances the application of AI in facial expression analysis but also provides essential technical support for ensuring safe and effective HRI in intelligent meal-assisting robots. By integrating sophisticated neural network models with real-time facial expression detection, our work contributes to the development of smarter, safer robotic systems that can significantly enhance user experience and safety in everyday applications.

Powered by Editorial Manager® and ProduXion Manager® from Aries Systems Corporation

Dear Editors,

We would like to submit the enclosed manuscript entitled "**Enhancing human-robot interaction safety: Integrated neural network models for accurate facial expression detection in intelligent meal-assisting robotics**", which we wish to be considered for publication in "**APPLIED INTELLIGENCE**".

This paper proposes an advanced Integrated Neural Network Model (INNM) designed for real-time detection of dysphagia intensity levels from facial video frames. The INNM architecture comprises two key components: a feature extraction network and a converged CNN-ConvBiLSTM network. In the feature extraction stage, we enhance the YOLOv8s-cls architecture with deformable convolutions to better capture fine spatial details of facial expressions. This enhancement allows for more precise identification of subtle facial cues. Additionally, the CloFormer attention mechanism is integrated to effectively perceive both local high-frequency and global low-frequency information, thereby improving the model's sensitivity to nuanced facial changes. In the converged CNN-ConvBiLSTM network, we propose a novel algorithm that combines a three-layer hybrid CNN with ConvBiLSTM, employing a jumping-connection strategy. This approach significantly strengthens the model's ability to handle long-term and short-term temporal sequences, while also enhancing its capacity to integrate and interact with spatial information. The jumping connections improve the memorization ability of the model, making it more robust in processing complex time-series data. Extensive experiments demonstrate that the INNM outperforms baseline models and current state-of-the-art methods in dysphagia intensity classification, achieving remarkable accuracy. Ablation studies further validate the effectiveness of each component enhancement, confirming the model's superior performance. This research not only advances the application of AI in facial expression analysis but also provides essential technical support for ensuring safe and effective HRI in intelligent meal-assisting robots. By integrating sophisticated neural network models with real-time facial expression detection, our work contributes to the development of smarter, safer robotic systems that can significantly enhance user experience and safety in everyday applications.

No conflict of interest exits in the submission of this manuscript, and manuscript is approved by all authors for publication. I would like to declare on behalf of my co-authors that the work described was original review that has not been published previously, and not under consideration for publication elsewhere. All the authors listed have approved the manuscript that is enclosed. In addition, some of our results have not been shown due to space limitations of the manuscript. We can carefully revise the content of the manuscript based on the editor's or reviewer's revision suggestions. We hope this paper is suitable for "**APPLIED INTELLIGENCE**".

Thank you and best regards.

Yours sincerely,

Lixun Zhang Ph. D
Professor
College of Mechanical and Electrical Engineering, Harbin Engineering University,
Building No.61, Nantong Street No. 145, Harbin 150001, China.
E-mail: zhanglixun@hrbeu.edu.cn

Highlights

- The INNM model for facial dysphagia intensity from facial video frames is proposed.
- Deformable convolution and CloFormer are introduced in feature extraction network.
- The three-stream hybrid CNN-ConvBiLSTM network is proposed.
- Ablation experiments and various comparative experiments are performed.
- INNM model can provide value for HRI and facial expression analysis.

manuscirpt Click here to view linked References

Enhancing human-robot interaction safety: Integrated neural network models for accurate facial expression detection in intelligent meal-assisting robotics

Yuhe Fan[a], Lixun Zhang[a, *], Zhenhan Wang[a], Zekun Yang[a], Huaiyu Che[a], Feng Xue[a], Canxing Zheng[b], Keyi Wang[a], Xingyuan Wang[a]

[a]College of Mechanical and Electrical Engineering, Harbin Engineering University, Harbin, China. [b]Weifang People's Hospital, Weifang City, Shandong Province, China.

[a, *]**Corresponding author:** Lixun Zhang, College of Mechanical and Electrical Engineering, Harbin Engineering University, Building No.61, Nantong Street No. 145, Harbin 150001, China. ✉**Email:** zhanglixun@hrbeu.edu.cn (Lixun Zhang). 17852833762@163.com (Yuhe Fan)

Abstract: Real-time and accurate facial dysphagia intensity classification is critical for enhancing safety and effectiveness in human-robot interaction (HRI), especially within the context of intelligent meal-assisting robotics. Traditional single deep neural network models, however, often struggle to capture subtle facial changes and sequential information, leading to inaccuracies in hierarchical dysphagia intensity classification. To address these challenges, this paper proposes an advanced Integrated Neural Network Model (INNM) designed for real-time detection of dysphagia intensity levels from facial video frames. The INNM architecture comprises two key components: a feature extraction network and a converged CNN-ConvBiLSTM network. In the feature extraction stage, we enhance the YOLOv8s-cls architecture with deformable convolutions to better capture fine spatial details of facial expressions. This enhancement allows for more precise identification of subtle facial cues. Additionally, the CloFormer attention mechanism is integrated to effectively perceive both local high-frequency and global low-frequency information, thereby improving the model's sensitivity to nuanced facial changes. In the converged CNN-ConvBiLSTM network, we propose a novel algorithm that combines a three-layer hybrid CNN with ConvBiLSTM, employing a jumping-connection strategy. This approach significantly strengthens the model's ability to handle long-term and short-term temporal sequences, while also enhancing its capacity to integrate and interact with spatial information. The jumping connections improve the memorization ability of the model, making it more robust in processing complex time-series data. Extensive experiments demonstrate that the INNM outperforms baseline models and current state-of-the-art methods in

dysphagia intensity classification, achieving remarkable accuracy. Ablation studies further validate the effectiveness of each component enhancement, confirming the model's superior performance. This research not only advances the application of AI in facial expression analysis but also provides essential technical support for ensuring safe and effective HRI in intelligent meal-assisting robots. By integrating sophisticated neural network models with real-time facial expression detection, our work contributes to the development of smarter, safer robotic systems that can significantly enhance user experience and safety in everyday applications.

Keywords: Intelligent meal-assisting robotics, human-robot interaction, facial expression analysis, dysphagia intensity, integrated neural network model

1 Introduction

As an emerging service robot, intelligent meal-assisting robotics primarily consists of mechanical structure module, servo drive module, computer vision module, and communication module [1, 2]. The computer vision module is responsible for accurately recognizing and locating mouth and meal, transmitting relevant information to the servo drive module via the communication module. Subsequently, the servo drive module controls the movement of the robotic arm to facilitate food fetching and delivery functions. Facial dysphagia intensity classification is an important technology for ensuring the safety of human-robot interaction, particularly during the meal delivery phase of meal-assisting robotics. During the meal delivery process, when diners exhibit normal facial expressions, the robotic arm operates stably according to predetermined program. However, if diner displays slight dysphagia expression, the arm will automatically return to initial position; in cases of moderate or severe dysphagia expressions, the arm will immediately halt all movements. Therefore, real-time monitoring facial dysphagia intensity of diners is essential to enhance the safety of human-robot interactions in these robotic systems.

Video-fluoroscopic swallowing examination [3], water drinking tests [4], and voice analysis methods [5, 6] have shown some utility in dysphagia classification. However, these methods have significant limitations in practical applications. The monitoring and identification techniques are often influenced by subjective judgment of humans, making it challenging to ensure objectivity and continuous real-time monitoring. This limitation significantly hampers the popularity and practicality of these methods. For instance, video-fluoroscopic swallowing examinations and water drinking tests require diagnosis by medical professionals, which complicates the ability

to provide real-time monitoring for patients at home. Although voice analysis methods offer notable advantages in reducing human error, its accuracy can be affected by various factors, including environmental noise, patient positioning, and microphone placement. Furthermore, the applicability of voice analysis technology is not universal for all types of swallowing disorders. For patients who produce little or no sound during swallowing, the effectiveness of voice analysis methods may face considerable challenges, thereby limiting its clinical diagnostic scope. In addition, the main service targets of intelligent meal-assisting robots are elderly people with upper-limb physical disabilities [7-10]. However, due to the sudden and unpredictable nature of dysphagia, which poses a potential hazard to the safety of human-robot interaction during the feeding process of meal-assisting robots [11, 12]. Therefore, the development of a classification system capable of real-time and accurate monitoring of dysphagia intensity is essential to ensure the safety of individual patients and enhance human-robot interactions.

As computer vision and deep learning technologies progress rapidly, facial expression analysis has demonstrated unrivaled potential in the areas of emotion recognition, medical diagnosis, and human-robot interaction of robots [13-15]. As a complex, emerging, and important research in the field of facial expression analysis, facial dysphagia classification technology is increasingly highlighting its great development potential and application prospects. In recent years, convolutional neural networks (CNNs) have been rapidly developed and widely used for face and object detection and recognition [16, 17]. YOLOv8 [18] belongs to the latest versions of the YOLO (You Only Look Once) [19] series of target detection models. It takes on the end-to-end real-time detection capability of the YOLO series of models and simultaneously makes optimizations in terms of accuracy and speed. YOLOv8 is based on the architecture of convolutional neural networks (CNNs), which utilizes the feature extraction capabilities of CNNs to recognize target objects in images [20]. Deep neural networks with CNN architectures can leverage the significant benefits of feature extraction from still images. However, it is difficult to analyze sequential data such as voice or video data with the single deep neural network models, making it difficult to accurately detect facial dysphagia intensity. Recurrent neural networks (RNNs) can compensate for the shortcomings of CNNs in terms of time series and are capable of updating the representation with past information [21]. However, RNNs are inclined to encounter the problem of gradient vanishing or gradient explosion during the processes

of training and testing, which restricts the ability of RNNs to handle long sequences. As a new variant of RNN, bidirectional long short-term memory networks (BiLSTM) [22] can represent each sequence in both forward and backward directions through two independent hidden states, thereby capturing past and future information respectively.

Given the superior ability of convolutional neural networks in spatial feature extraction and the significant advantages of recurrent neural networks in processing time-series data, in recent years, integrated methods that incorporate these two networks have shown unprecedented potential and advantages in the field of facial expression analysis, particularly in the field of pain detection [23, 24]. Rodriguez et al. [25] put forward a method to combine CNN and RNN. This method extracts features from the pre-trained CNN network and then transfers this feature information to the RNN network for pain detection in facial expressions. References [26, 27] further advanced this concept by extracting facial features from the pre-trained VGGFaces model and subsequently integrating them into the LSTM to utilize the temporal dependencies among video frames for the pain detection of facial expressions. Ding and Tao [28] put forward an integrated CNN model which is applied to face recognition based on video sequences and surpasses previous methods like Deep Face [29], DeepID2+ [17], and VGG Face2 [30] in performance. According to the literature [31], the optimal design of the integrated neural network can be accomplished by adjusting initial weights, network topology, and the composition of the training dataset, with the aim of maximizing the performance of models. By integrating the decisions of multiple neural networks, integrated models can significantly reduce the expected error compared to the single deep neural networks, thus demonstrating more robust generalization capabilities and better accuracy. Although integrated models of CNNs and RNNs have demonstrated remarkable potential in several domains of facial expression analysis, they have relatively lower accuracy in the classification of dysphagia intensity in facial expressions. Moreover, relatively little research has been carried out on integrated models employing end-to-end architectures. In addition, deformable convolution [32, 33] and the CloFormer attention mechanism [34] shows significant potential for enhancing model robustness and generalization. Deformable convolution allows the sampling locations of the convolution kernel to dynamically adjust perceptual field at each location based on the inputs, which allows models to better handle changes in shape, viewpoint, and scale of the facial region. CloFormer captures local high-frequency information through convolutional layers while capturing global low-

frequency information through the self-attention mechanism, which allows models to perceive both local and global contextual information.

In this work, we put forward a novel integrated neural network model (INNM) with an end-to-end architecture for automatically detecting dysphagia intensity levels from facial video frames. To verify the superiority of the INNM model, this paper conducts an extensive experimental evaluation based on a large dataset. The experiments are compared not only with baseline models but with single neural network models and current state-of-the-art models for facial expression analysis in a comprehensive manner. The outcomes indicate that the INNM model exhibits notable advantages in dysphagia intensity level classification, with a significantly enhanced accuracy. Additionally, we further confirm the effectiveness of each improvement in models through ablation experiments. The main contributions of this paper can be summarized as follows.

1. A new integrated neural network model (INNM) was proposed, which mainly consists of the feature extraction network and the converged CNN-ConvBiLSTM network.
2. In the feature extraction network, we optimize the YOLOv8s-cls backbone network by introducing deformable convolution and CloFormer modules.
3. In the converged CNN-ConvBiLSTM network, this paper develops an algorithm that integrates the three-layer hybrid CNNs and convolutional BiLSTM and employs jumping-connection strategy, which effectively strengthens the memory capability of models in dealing with long-term and short-term time sequences, and the ability to integrate and interact with information in the spatial dimension.
4. To verify the superiority of the INNM model, the experiments were compared not only with baseline models but with single neural network models and current state-of-the-art models for facial expression analysis in a comprehensive manner. In addition, the validity of each improvement in models was verified through ablation experiments.
5. This research provides important technical support for the safety of intelligent meal-assisting robots and significantly advances the application of AI in facial expression analysis.

2 Proposed methods

The innovative highlight of this study is that an integrated neural network model (INNM) was proposed for multiple categorizations (four classes) of dysphagia intensity from facial expression video frame sequences. As shown in Fig. 1, it presents the block

diagram of the INNM model proposed in this paper. Before inputting video frame data into the model, we preprocess and normalize the frame images in dataset. The proposed INNM model mainly comprises two parts: the feature extraction network (Fusion 1) and the converged CNN-ConvBiLSTM network (Fusion 2). In the feature extraction network, an improved combination of the YOLOv8s-cls and CloFormer attention mechanism was used to extract facial features. Then, the proposed facial feature information is passed to the converged CNN-ConvBiLSTM network for multiple classifications of facial dysphagia intensity. In the converged CNN-ConvBiLSTM network, we develop an architecture that merges three-stream hybrid CNN and convolutional BiLSTM network and employ the jumping-connection strategy to converge the outputs for quadruple categorization of facial dysphagia intensities. The details of data preprocessing, feature extraction network, converged CNN-ConvBiLSTM network, and the whole INNM algorithm are described below.

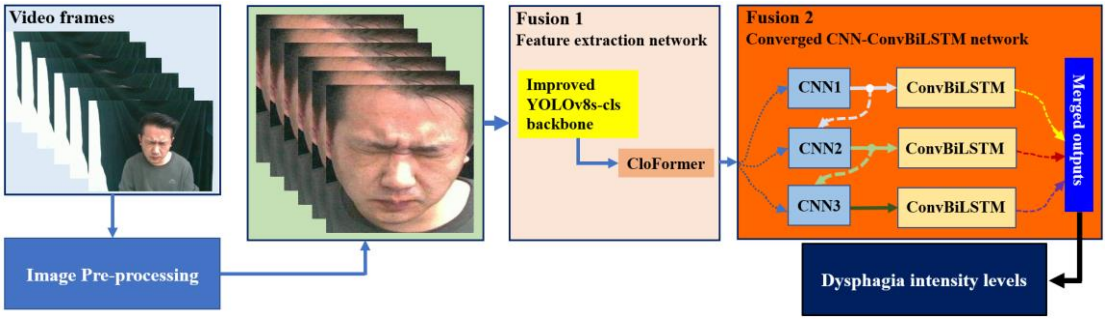

Fig. 1 Block diagram of the proposed integrated neural network model (INNM) for detecting multiple categories of dysphagia intensity from facial expressions.

2.1 Pre-processing

In the captured facial dysphagia dataset, the differences in external light intensity and the diversity of head orientations resulted in visual differences in image frames. These factors increase the complexity of accurately recognizing facial expression categories, especially for complex facial dysphagia expressions. Therefore, we performed image pre-processing and normalization on each image frame in dataset to augment the detection performance of models. Specifically, we first employ the advanced DCGW-YOLOv8n-seg algorithm [11], a face detection algorithm with excellent performance in noisy images, to localize face region in each frame image. Subsequently, the detected face regions are cropped and centered to eliminate background interference and to ensure the consistent position of face images. Following, all pre-processed images were resized to 224×224 pixels size while maintaining 3-

channel color information to accommodate the input requirements of the feature extraction network. This is because the 224×224×3-pixel input size is widely used in most deep neural network models including YOLOv8s-cls and VGG. Finally, the pre-processed image data is normalized. The normalization process involves converting the image data type from integer to floating point and then dividing the pixel value of the image by the maximum value, thus scaling the pixel value to the interval range [0, 1]. Normalization can be described as follows [23, 24]:

$$R \rightarrow R: x \rightarrow \frac{x}{d} d = \max_{x \epsilon \text{image}} \left|\left|x\right|\right| \tag{1}$$

2.2 Proposed feature extraction network architecture

During the design process of the proposed integrated INNM model, the architecture part of the feature extraction network (Fusion 1) is designed first, as depicted in Fig. 2. The main role of the feature extraction network is to extract crucial feature information from each frame of the pre-processed image, which is then passed to the subsequent converged CNN-ConvBiLSTM network for further processing. For the purpose of strengthening the feature extraction ability of networks, we combine the improved YOLOv8s-cls network with the CloFormer attention mechanism. In particular, we take YOLOv8s-cls as the baseline model for feature extraction. By introducing deformable convolutions to replace traditional convolutions, we aim to improve the model's ability to capture fine spatial information of face images. Simultaneously, the CloFormer attention mechanism was introduced to enhance the models' capacity to perceive local high-frequency information and global low-frequency information within the feature map. This design approach, through integrating deformable convolution in the YOLOv8s-cls network, allows the model to capture subtle changes in facial features more precisely. Meanwhile, the introduction of the CloFormer attention mechanism augments the ability of models to perceive local and global contextual information in the feature map.

In backbone network of the YOLOv8s-cls model, the convolutional layer of C2f module adopts traditional convolutional network, whose convolution kernel performs convolution operations using fixed sampling points. However, this convolution based on a grid of fixed sampling points has limitations in processing video frame images, especially in capturing complex and subtle spatial variations in facial regions, such as changes in shape, viewpoint, and scale. Thus, we introduce deformable convolutions to take the place of traditional convolutions in the C2f module, as illustrated in Fig. 3. The key advantage of deformable convolution lies in enabling the sampling positions of the

convolution kernel to be dynamically adjusted according to the input data, so as to adaptively change the receptive field at each position. As a result, this enhances the ability to capture fine-grained spatial information, as depicted in Fig. 4.

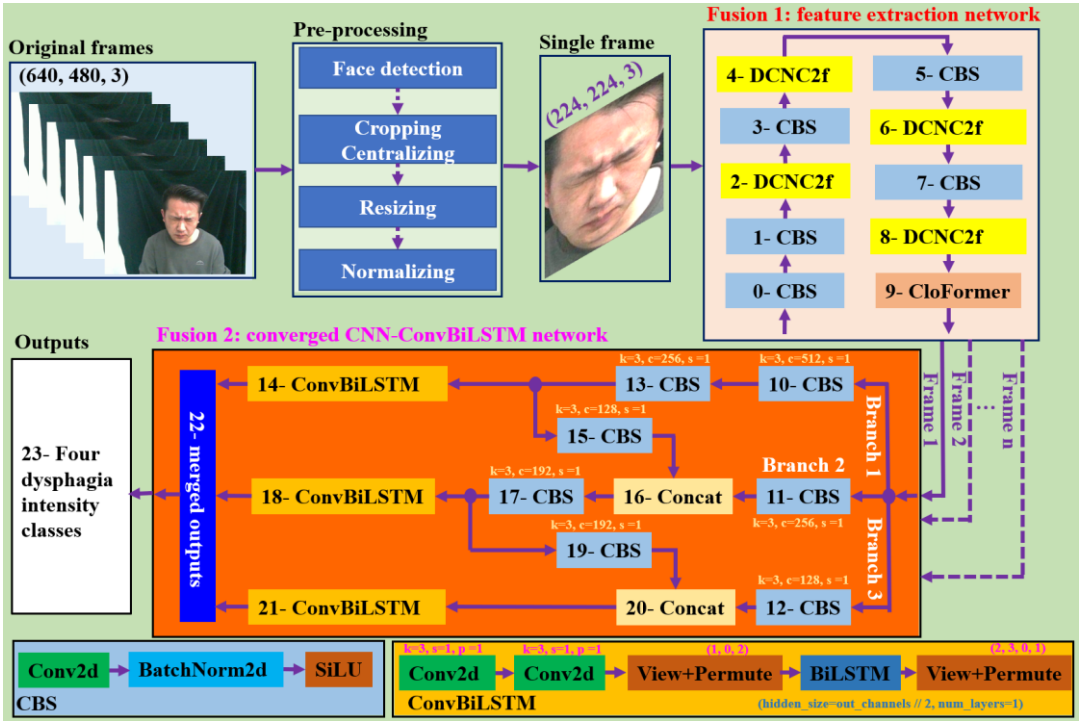

Fig. 2 The architecture of the proposed integrated INNM model: the INNM model primarily consists of two components, the proposed feature extraction network (Fusion 1) and the proposed converged CNN-ConvBiLSTM network (Fusion 2).

In the course of architectural optimization of the YOLOv8s-cls backbone network, convolutional layers in the backbone network can be classified into three categories to attain model performance enhancement and rational resource allocation. The first category of convolutional layers comprises those in the CBS module within the backbone network. The second category is made up of the convolutional layers in the C2f module, excluding the bottleneck structure. The third category is the convolutional layers inside the bottleneck module of the C2f module. We selectively substitute the traditional convolutional layers with deformable convolutional layers to boost the model's capability to capture the delicate and complex features of faces. It is worth noting that we did not replace the deformable convolution with the first and the second type of convolutional layers but with the third type of convolutional layers. This is because, in our experiments based on the facial expression dataset, we found that employing deformable convolution only in the third type of convolutional layers can bring significant accuracy improvement compared to replacing deformable convolution

in the first or the second type of convolutional layers while avoiding the need to increase complexity and improving inference speed of models.

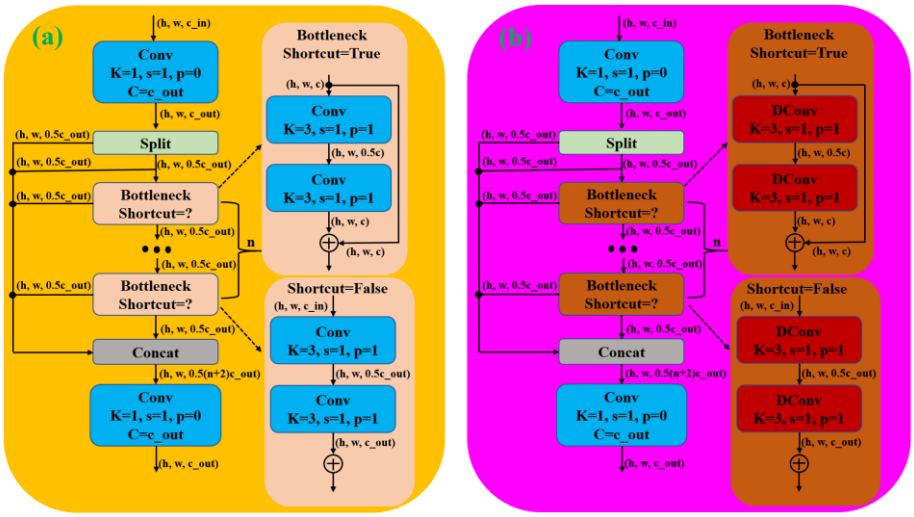

Fig. 3 (a) C2f module and (b) DCNC2f module.

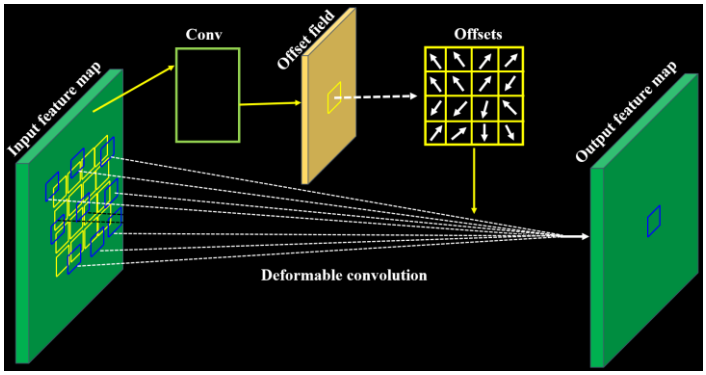

Fig. 4 Schematic structure of deformable convolution.

The CloFormer, as a new variant of the Transformer module, incorporates local and global attention mechanisms to enhance context awareness and enable efficient aggregation of local information [34]. As depicted in Fig. 5, the structure of CloFormer consists of two parts: the Clo block module and the convolutional feedforward network (ConvFFN module), aiming to enhance computational efficiency and model performance. In the Clo block module, an attention style convolutional operator, AttnConv, was introduced, which efficiently aggregates local context information through a shared weighting mechanism, thus enhancing the capability of models to capture local features while maintaining computational efficiency. In addition, the Clo block module integrates the Vanilla attention mechanism, which significantly reduces the floating-point operations (FLOPs) by employing pooling operations, while improving the ability of models to perceive global information, thus achieving a balance

between local details and global context. The CloFormer employs two types of ConvFFN modules designed to optimize information flow and enhance model representation. The first one is the intra-stage ConvFFN. It directly employs skip connections to guarantee lossless information transfer, thereby promoting the depth and complexity of the model. The second is the cross-stage ConvFFN, which connects two different processing stages and facilitates the modeling of long-distance dependencies through skip connections, which enhances the generalization of models.

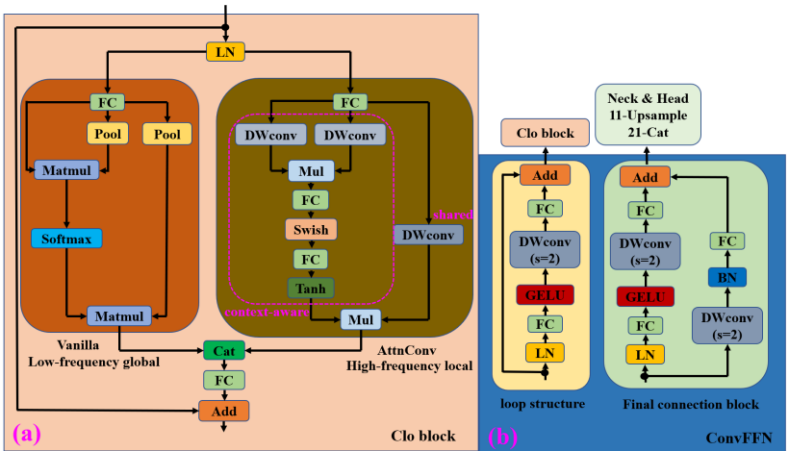

Fig. 5 CloFormer attention: (a) the Clo block module, (b) the ConvFFN module.

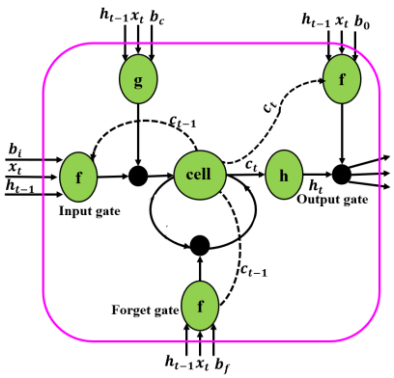

Fig. 6 Schematic structure of the LSTM unit: where, the $\boldsymbol{x_t}$ is the current input vector, the $\boldsymbol{c_{t-1}}$ is the memory of the previous module, the $\boldsymbol{h_{t-1}}$ is the output of the previous module, the $\boldsymbol{b}$ is the bias, the $\boldsymbol{h_t}$ is the output of the current module, and the $\boldsymbol{c_t}$ is the memory of the current module.

2.3 Proposed converged CNN-ConvBiLSTM network

In Fig. 2, the orange region represents the converged convolutional neural network (CNN) with convolutional bidirectional long short-term memory network (ConvBiLSTM) architecture (converged CNN-ConvBiLSTM network) in the INNM model. This is utilized to output the multiple classifications of facial dysphagia intensity

levels after the feature extraction network. Integrated learning, as a state-of-the-art strategy, significantly enhances the generalization ability of the classifier by combining the predictions of multiple models, thus demonstrating superior performance when dealing with complex datasets.

Since the facial dysphagia data are video frame images, the inherent temporal characteristics demand that we employ a neural network architecture capable of efficiently processing sequential data. RNNs and their variants are a natural choice. However, RNN is susceptible to gradient explosion or gradient vanishing during training and testing, which limits its performance on long sequence data. Given this situation, in this research, we give priority to using the LSTM network, an improved version of RNN that overcomes the aforementioned deficiencies. Fig. 6 depicts in detail the structure of the LSTM module, which centers on three gating mechanisms (forgetting gates, input gates, and output gates) to regulate the information flow [35, 36]. The forgetting gate is in charge of filtering and retaining crucial information from previous time steps. The input gate decides what new information is added to the cell state. The output gate controls the quantity of information that is output based on the current cell state, which in turn influences the formation of the subsequent hidden states. The updating mechanism of the LSTM cell state ensures that the network can efficiently learn the long-term dependencies and is not subject to gradient vanishing or exploding. The cell state of the LSTM network is computed as:

$$i_t = \sigma(W_{xi}x_t + W_{hi}h_{t-1} + W_{ci}c_{t-1} + b_i) \tag{2}$$

The output of the forgetting gate is:

$$f_t = \sigma\left(W_{xf} + W_{hf}h_{t-1} + W_{cf}c_{t-1} + b_f\right) \tag{3}$$

The cell state for the current step is:

$$c_t = f_t c_{t-1} + i_t \, tanh(W_{xc}x_t + w_{hc}h_{t-1} + b_c) \tag{4}$$

When the forgetting and input gates control the quantity of information about the early cell state c_{t-1} and the new cell state c_t, they should be permitted to pass through.

The current state can anticipate the output of the cell to be as follows,

$$o_t = \sigma(W_{xo}x_t + W_{ho}h_{t-1} + W_o c_t + b_o) \tag{5}$$

$$h_t = o_t \, tanh(c_t) \tag{6}$$

The LSTM network has a large advantage in dealing with long sequence dependency problems with its superior ability, especially in capturing the long-term dependency of sequences. However, the unidirectional structure of LSTM inherently dictates that its hidden state can only capture sequence information from past frames,

but not from future frames. This limitation is especially prominent in the facial expression intensity classification task. This task requires models to be capable of synthesizing information from both past and future frames in order to achieve a comprehensive understanding of the changes in expression dynamics. Therefore, it is difficult for LSTM to effectively capture comprehensive temporal sequence information, thus limiting their performance in the facial expression detection task. To address this problem, bidirectional LSTM (BiLSTM) inherits the advantages of LSTM while overcoming the limitations of its unidirectionality. BiLSTM can capture the information of both past and future frames simultaneously by simultaneously running two independent LSTM layers at each time step to process the sequences forward and backward, respectively. This bidirectional processing mechanism enables BiLSTM to generate two independent hidden states for each sequence, representing the forward and backward information of the sequence, respectively. By combining these two hidden states, BiLSTM can provide a more comprehensive understanding of temporal properties of sequences, thus demonstrating better performance in tasks such as facial expression intensity classification.

In this study, we tested multiple versions of the proposed model to explore the performance of different architectures in the task of facial dysphagia expression intensity classification. The experimental outcomes demonstrate that the model integrating the CNN and the BiLSTM can offer more accurate classification results in comparison to the architecture utilizing only BiLSTM. Therefore, we devised an architecture that combines the three-stream hybrid CNN and convolutional BiLSTM, namely, the converged CNN-ConvBiLSTM network. This architecture not only inherits the information integration and interaction capabilities of CNN in the spatial dimension but utilizes the memory advantages of BiLSTM in dealing with long-term and short-term time series. In addition, we employ the jumping-connection strategy, which allows the network to pass information between different layers, thus enhancing the feature fusion capability of models. Ultimately, we achieved an accurate classification of facial dysphagia expression intensity by merging the information extracted from the three layers of branched streams (the orange region in Fig. 2).

In the orange region of Fig. 2 (Fusion 2), the proposed converged CNN-ConvBiLSTM network consists of three layers of parallel branches, which are interconnected by the jumping-connection strategy. Each branch consists of the CNN and the ConvBiLSTM, where each ConvBiLSTM module effectively combines the

properties of the CNN and the BiLSTM network. Specifically, both the first and second branching streams consist of two CBS and one ConvBiLSTM, while the third branching stream consists of one CBS and one ConvBiLSTM. Each CBS unit is composed of a convolutional layer, a batch normalization layer, and a SiLU activation function. These elements are designed for efficient feature extraction and nonlinear mapping. The ConvBiLSTM module consists of the convolutional layer and the BiLSTM layer. Since the input requirement of the BiLSTM layer is a one-dimensional tensor sequence, we utilize the view and permute functions in the PyTorch library to perform the necessary processing of the input feature map tensor to satisfy the input conditions of the BiLSTM, which is essential to maintain the temporal and spatial characteristics of data. In addition, we employ the jumping-connection strategy to merge the feature tensor of the three tributaries to augment representation of input data.

2.4 INNM algorithm design

Algorithm 1: The proposed INNM algorithm

Input: *n* RGB frame images, I_1, I_2,…, I_n
Output: The class of dysphagia intensity

```
for i ← 1 to n do
    face detection, cropping, centralizing, resizing, and normalizing
    face_i ← Preprocess (I_i)
    feature extraction network
    features_i ← Extract Features (face_i)
    Converged CNN-ConvBiLSTM network
    tensor_(i,1) ← branch_ConvBiLSTM_1 (Process Features(features_i))
    tensor_(i,2) ← branch_ConvBiLSTM_2 (Process Features(features_i))
    tensor_(i,3) ← branch_ConvBiLSTM_3 (Process Features(features_i))
    tensor_i ← Merged (tensor_(i,1), tensor_(i,2), tensor_(i,3))
end for
merged_outputs ← Merged_images2tensors (tensor_1, tensor_2, tensor_n)
classification ← Classify (merged_outputs)
Estimate four classes of dysphagia intensity level (class with the highest output selected)
Evaluate results
```

Algorithm 1 describes in detail the INNM algorithm proposed in this paper. In the INNM algorithm, the input is n sequences of RGB facial frame images, and each sequence is set to be 20 frames (i.e., n=20) in this study. The output of the INNM algorithm is the four category markers of facial dysphagia intensities, i.e., 0=Moderate, 1=Normal, 2=Severe, and 3=Slight. Before inputting the frame images into the INNM

algorithm, batch pre-processing and normalization operations are performed on each sequence (20 frames). These steps include face detection, cropping, centroid processing, scaling, and normalization. Subsequently, the pre-processed face image of each frame will be passed to the feature extraction network. Subsequently, the extracted feature information will be input into the converged CNN-ConvBiLSTM network. Finally, after merging the feature information from the three streams of branches, it is passed to the classification layer, which finally outputs the facial dysphagia intensity category for each sequence. In the next section, we will detail the specific algorithmic parameter settings during the experiment and the design of the comparison experiment.

3 Experiments and assessment metrics

3.1 Experimental setup

Fig. 7 presents the comprehensive structure of the meal-assisting robot. Fig. 7(a) exhibits the prototype of the meal-assisting robot, which mainly encompasses the robotic arm and the rotating plate device. Fig. 7(b) reveals the measurement apparatus of the meal-assisting robot, consisting of two depth cameras, two force sensors, a module screw, two half-scoops, and a plate rotation mechanism. There exist two types of depth cameras: a global acquisition camera (RealSense D435i, with a resolution of 848×480, from Intel Corporation, USA) and a local camera (RealSense D405, having a resolution of 848×480, from Intel Corporation, USA).

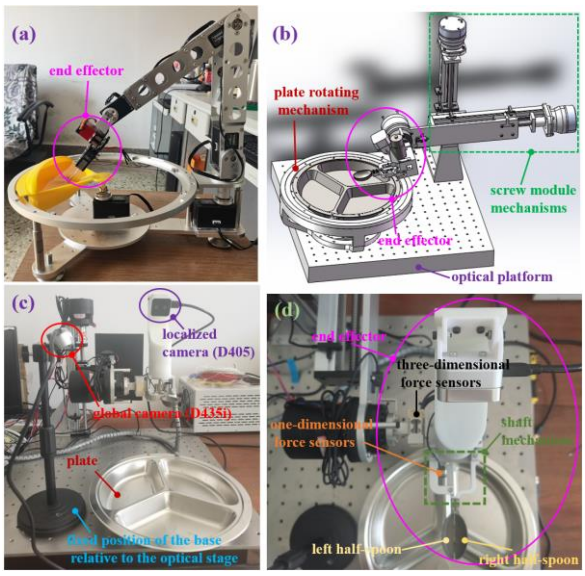

Fig. 7 Experimental setup: (a) a model of the meal-assisting robot, (b) a 3D CAD illustration of the experimental layout, (c) a frontal perspective of the experimental setup, and (d) parts of the end-effector used in this experiment.

3.2 Data acquisition

We utilize the local depth camera as shown in Fig. 7 to capture face videos that contain noise. We set the resolution of the RealSense D405 to 640x480 to ensure that we can cover the entire face region in frame images. We invited 32 teachers and students to participate in the experiment, and each participant performed three capture experiments. Each experiment contained four categories with different levels of intensity: no dysphagia (Normal), slight dysphagia (Slight), moderate dysphagia (Moderate), and severe dysphagia (Severe). In each experiment, we used walnut date cake (Hebei Aoke Foods Co., Ltd. in Xingtai City, Hebei Province, China) and four videos of inducing dysphagia expressions to effectively induce participants to exhibit the four intensity levels of dysphagia expressions. We obtained a total of 384 video sequences and extracted all videos into frame images with time series features, totaling 193,144 frame images.

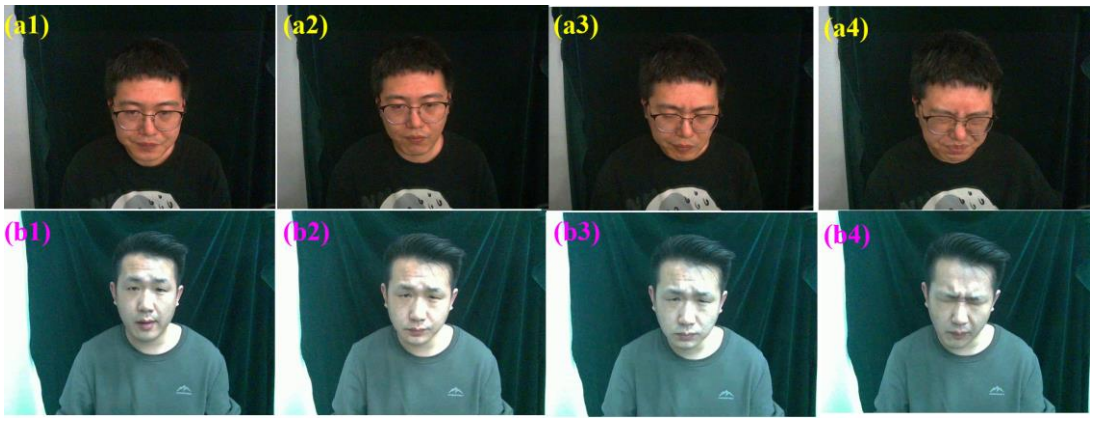

Fig. 8 Sample frames in the dataset of facial dysphagia intensity: (a) the frames captured without light illumination, (b) the frames captured with light illumination. The numbers 1, 2, 3, and 4 denote the four dysphagia intensity levels, namely, “Normal,” “Slight,” “Moderate,” and “Severe,” respectively. Note: The above frames are presented with the generous permission and support of the participants.

The number of non-dysphagia expression (Normal) frame images was significantly higher than other types of frame images in the captured dysphagia frame images, which resulted in an imbalance in the dysphagia intensity dataset. Due to the specific characteristics of facial dysphagia data, any facial expression model may tend to predict non-dysphagia expressions at the expense of dysphagia expression accuracy. Therefore, utilizing unbalanced dysphagia expression data may result in models that are intentionally biased towards a particular category, thereby producing inaccurate

results. To address this problem, this study used resampling techniques to balance the facial dysphagia intensity database and reduce the percentage of non-dysphagia expressions (Normal). Therefore, we removed some image sequences of frames containing normal to achieve a balanced dataset.

Table 1 Number of samples in the dysphagia intensity dataset.

Subset name	Dysphagia intensity classes	Number of samples	Subset name	Dysphagia intensity classes	Number of samples	Subset name	Dysphagia intensity classes	Number of samples
training set	Normal	14,311	validation set	Normal	1,784	test set	Normal	1,783
	Slight	14,308		Slight	1,787		Slight	1,794
	Moderate	14,288		Moderate	1,732		Moderate	1,788
	Severe	14,382		Severe	1,790		Severe	1,795

Note: The number of samples in the table refers to the number of samples after filtering to remove multi-frame images in the original video that do not belong to the specified dysphagia level classes where they are located.

The resampling technique was applied to the facial dysphagia database due to frame images in some videos that were missing specific themes and had an unbalanced proportion of each dysphagia intensity category. Therefore, in this paper, the down-sampling technique was applied to reduce the number of samples in the main categories and some frame images associated with non-dysphagia (Normal) expression sequences were removed. Finally, we selected 71,542 frame images to construct the dataset of facial dysphagia intensity categories, and Fig. 8 shows the samples of the four dysphagia intensities in this dataset. For the purpose of effectively training and testing the models, we split these 71,542 frames into training, validation, and testing sets in a ratio of 8:1:1. The number of samples in each subset is presented in Table 1. It should be noted that the contents of the frames in the four dysphagia intensity categories in the three subsets of the dataset are different, and this division is intended to better reflect the robustness and generalization ability of models.

3.3 Experiment details

In this research, we employ the integrated neural network modeling algorithm (INNM) and conduct a comprehensive evaluation against other comparative algorithms. All experiments were performed on the Windows 10 operating system using the PyTorch framework. The training workstation features an Intel(R) Xeon (TM) Platinum-8124P CPU paired with an NVIDIA GeForce RTX 4080 GPU to ensure

efficient model training. In parallel, the testing workstation is equipped with an Intel(R) Core (TM) i5-10300H CPU and an NVIDIA GeForce GTX 1650 GPU for performance comparison of each algorithm. To maintain consistency in the experimental environment, both workstations had identical software versions installed: Conda 22.9.0, CUDA 11.7, cuDNN 8.4, PyTorch 1.13.1, Python 3.8.17, and PyCharm 2023.

During model training, we set specific parameters: a batch size of 16, a total of 100 epochs, input image resolution at 224×224 pixels, and a sequence length of video frames (n) equal to 20. The initial learning rate was established at 0.001 with a cyclic learning rate of up to 0.2; additionally, we applied a weight decay factor of 0.0005 for regularization purposes. We utilized stochastic gradient descent (SGD) as our optimizer with a momentum value set at 0.93 to enhance the efficiency of model training processes effectively. Following this section will be detailed descriptions of the experimental procedures involving INNM alongside various comparison models to provide readers with clearer insights into our research methodology and design choices.

3.3.1 Comparison experiments with baseline

To assess the effectiveness of the INNM model proposed in this study, we conducted experiments comparing it with baseline models. The YOLOv8s-cls was selected as a single deep neural network baseline and was further optimized to improve its feature extraction capabilities. The base model did not incorporate deformable convolution, CloFormer attention mechanisms, or convolutional bidirectional long short-term memory networks. We performed experiments using the facial dysphagia dataset to ensure that all models were trained on identical training and validation sets. All tests were executed under consistent workstation configurations and frameworks to guarantee reproducibility. During the training phase, we set the batch size at 16 and ran for 100 epochs. Following this, validation comparison tests were carried out on a separate test workstation utilizing the same facial dysphagia test dataset.

3.3.2 Comparison experiments with advanced models

To comprehensively evaluate the performance of the INNM model proposed in this paper, we carried out comparative experiments side by side with several state-of-the-art (SOTA) single deep neural network models and several integrated models that have performed outstandingly in the field of facial expression recognition. All models are compared experimentally on the same dataset and in a consistent training and testing environment.

In the comparison experiments of single deep neural network models, we selected

various versions of YOLOv3 [37], YOLOv5 [38], YOLOv6 [39], and YOLOv8 models for detailed performance evaluation with the INNM model, respectively. All YOLO models were programmatically implemented using the YOLOv8 toolbox [18]. During the training phase, we configured the batch size as 16 and the number of epochs as 100. In the testing phase, the batch size was adjusted to 1 to guarantee the accuracy and uniformity of evaluations.

In comparing experiments with other integrated models, we compared the INNM model with five SOTA integrated models of facial expression proposed by researchers such as Rodriguez [26], Bellantonio [40], Mohammad [41], and Ghazal [23, 24]. In the experiments that were carried out, the batch size was set as 16. The training epoch was configured to be 100. The resolution of the input image was 224×224 pixels. Additionally, the number of image sequences of video frames was uniformly set to 20.

3.3.3 Experiments for ablation analysis

To verify the effectiveness of introducing deformable convolution and CloFormer attention mechanism in the YOLOv8s-cls backbone with respect to the feature extraction capability of models, and to examine the impact of the number of branch layers of the CNN-ConvBiLSTM network and jumping-connection strategy on the performance of models, a series of ablation experiments were carried out in this research. All experiments are trained and validated on the same facial dysphagia dataset and consistent environment configuration.

(a) Deformable convolutions. In order to evaluate the effect of the number and position of deformable convolution on the feature extraction capability of fine-grained spatial information, we gradually introduced four deformable convolutions into the YOLOv8s-cls backbone. Specifically, we replace the classical convolution in the four C2f modules of the YOLOv8s-cls backbone with deformable convolution. The purpose of introducing deformable convolution is to enhance the ability to capture fine-grained spatial information, thereby improving the accuracy of the model.

(b) CloFormer attention mechanism. For evaluating the effectiveness of incorporating the CloFormer attention mechanism in enhancing model performance, we sequentially integrate the CloFormer attention module after each C2f module within the YOLOv8s-cls backbone. This configuration is designed to investigate how the positioning of the CloFormer attention module influences the model capacity to perceive information at high frequencies locally and at low frequencies globally.

(c) Branching Layers of CNN-ConvBiLSTM. To evaluate the effect of the

number of branch layers of proposed hybrid CNN and ConvBiLSTM on the model performance, we conducted comparative experiments for each layer of branches, arbitrary two-layer branches, and three-layer branches. In the experiments, arbitrary two-layer branches and three-layer branches are used in parallel for the experiments, and the final merged output categories of dysphagia intensity.

(d) Jumping-connection strategy. To verify the effectiveness of adopted jumping-connection strategy in improving model performance, we conducted comparative experiments on two-layer branches and three-layer branches of the hybrid CNN and ConvBiLSTM, respectively. In the experiments, we compared the classification of dysphagia intensities between the separate parallel merging approach and the jumping-connection strategy merging approach, respectively, to investigate the effect of the jumping-connection strategy on model performance.

3.4 Evaluation metrics

We employ a set of stringent evaluation metrics for classification tasks to test and assess the performance of the INNM model and to make comparisons with other models, so as to ensure the reliability and validity of the evaluation results.

The number of parameters and floating-point operations of models are important metrics for evaluating the complexity and computational burden of models, which are commonly utilized in the performance evaluation of target classification and target detection models. These metrics not only reflect the weight of the model but directly affect its efficiency and feasibility in practical applications. The mathematical expression is:

$$N_{\text{params}} = (I \times (k \times k) \times O) + O \tag{7}$$

$$\text{FLOPs} = H \times W \times N_{\text{params}} \tag{8}$$

where, N_{params} represents the number of model parameters. I indicates the input size. k stands for the convolutional kernel size. O denotes the output size. Moreover, H and W signify the spatial dimensions of the output feature map.

In addition, we use accuracy, precision, and F_{score} as performance metrics for evaluating the INNM integrated model and other models in the dysphagia intensity classification task. These metrics are widely used in model evaluation in the fields of target classification, target detection, and instance segmentation, and have important evaluation value. The mathematical expression is:

$$\text{Accuracy} = \frac{TP + TN}{TP + TN + FP + FN} \tag{9}$$

$$\text{Precision (P)} = \frac{TP}{TP + FP} \tag{10}$$

$$\text{Recall (R)} = \frac{TP}{TP + FN} \tag{11}$$

$$F_{\text{score}} = 2 \times \frac{\text{P} \times \text{R}}{\text{P} + \text{R}} \tag{12}$$

where, true positive (TP) indicates that the model predicts positive instances and the actual samples are truly positive. True negative (TN) implies that the model predicts negative instances and the actual samples are indeed negative. False positive (FP) means that the model predicts positive instances while the actual samples are negative [42]. False negative (FN) signifies that the model predicts negative instances but the actual samples are positive.

Finally, we utilize frames per second (FPS) as a crucial metric for evaluating the inference speed of the proposed INNM model and other models. FPS is frequently used in the fields of image categorization, target detection, and instance segmentation to measure the real-time performance of models and the inference efficiency. Specifically, FPS can be defined as:

$$\text{FPS} = \frac{1}{\text{ITPF}} \tag{13}$$

where, ITPF stands for the inference time per image frame.

4 Results and discussion

4.1 Comparison to baseline models

To determine the performance difference between the INNM integrated model proposed in this paper and baseline models, we introduced deformable convolution, CloFormer attention mechanism, and the three-stream hybrid CNN-ConvBiLSTM network into the baseline model alone for comparative analysis, respectively. We trained and tested models on the facial dysphagia intensity dataset, and Fig. 9 shows the results of models in terms of classification loss and accuracy during training.

As depicted in Fig. 9(a), the INNM model decreases significantly more rapidly in terms of classification loss compared to the baseline model and the models that are formed by the introduction of deformable convolution, the CloFormer attention mechanism, and the three-stream hybrid CNN-ConvBiLSTM network individually. In addition, the INNM model has the lowest value when the classification loss reaches the

steady state and does not show overfitting, which indicates its efficiency and stability in the training process. As depicted in Fig. 9(b), it can be observed that the accuracy of the INNM model on the validation set is significantly higher than that of the baseline model and other comparison models. This implies that the INNM integrated model proposed in this paper has superior performance compared to the baseline model.

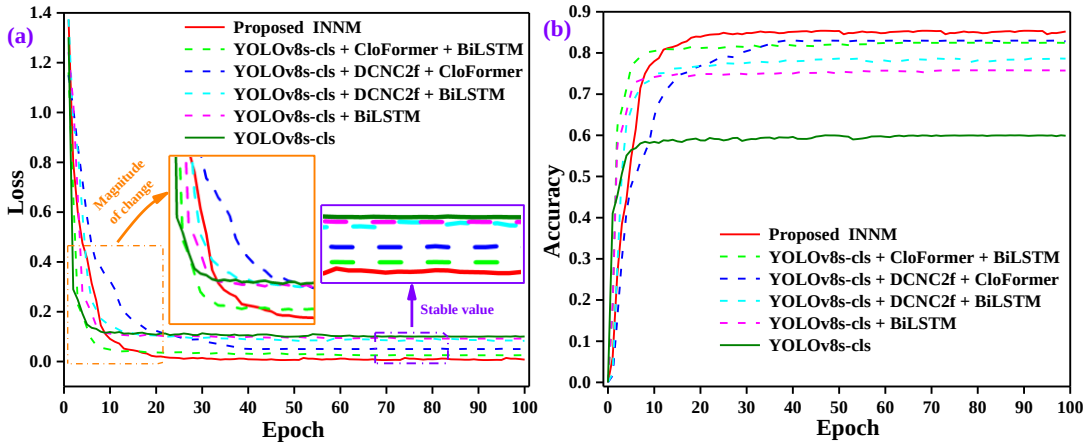

Fig. 9 Comparison results between the proposed integrated neural network model (INNM) and the baseline model during the training process: (a) classification loss and (b) accuracy.

For comparing the robustness and generalization ability of the INNM integrated model with the baseline model for the multi-category classification task at the facial dysphagia level, we validated the trained models in comparison on the facial dysphagia test set. Fig. 10 presents the confusion matrices of the INNM model, the baseline model, and the models formed by introducing deformable convolution, the CloFormer attention mechanism, and the three-stream hybrid CNN-ConvBiLSTM network on the test set, respectively. For the exact computation of the confusion matrix, the reader is referred to Glenn [18].

In Fig.10, the INNM model shows high accuracy in all categories, especially in the moderate and normal categories, which verifies that the INNM model has strong feature extraction and classification ability in the moderate dysphagia and normal categories. In addition, the YOLOv8s-CloFormer-ConvBiLSTM-cls and YOLOv8s-DCNC2f-CloFormer-cls models also show good performance, especially in the severe dysphagia category. This may be because introducing the CloFormer attention mechanism enable models to have strong contextual understanding and multi-scale processing, which improves the accuracy of models. However, the notably low accuracy of the baseline model in the normal category may be attributed to its limited feature extraction capabilities and inadequate time series memory, which hinder its

ability to accurately recognize features within this category. Furthermore, the relatively low performance of all models in the moderate dysphagia category may be attributed to the high complexity and nuance of the sample features within this category. This complexity necessitates more precise optimization and tuning of the models to enhance their recognition capabilities.

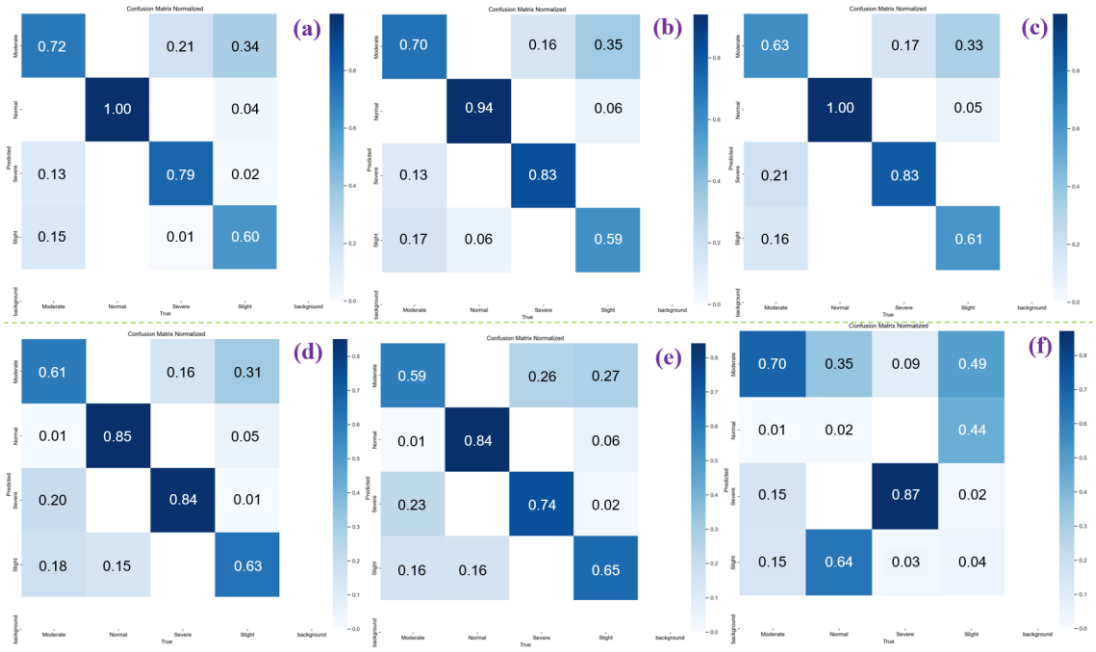

Fig. 10 The results of confusion matrices obtained by models in the test set of facial dysphagia intensity: (a) the proposed integrated neural network model (INNM), (b) the YOLOv8s-CloFormer-ConvBiLSTM-cls model, (c) the YOLOv8s-DCNC2f-CloFormer-cls model, (d) YOLOv8s-DCNC2f-ConvBiLSTM-cls model, (e) YOLOv8s-ConvBiLSTM-cls model, and (f) the YOLOv8s-cls model.

Table 2 Results of comparison to the baseline model in the test set for facial dysphagia intensity.

DCNC2f	CloFormer	ConvBiLSTM	Params (M)	FLOPs (G)	FPS	Accuracy (%)	F_{score} (%)
			5.08	12.5	**263.2**	40.68	36.19
√			5.41	**8.9**	161.3	43.46	40.18
	√		6.33	13.8	208.3	72.61	72.41
		√	8.42	15.1	166.7	70.92	70.90
√	√		6.67	10.3	137.0	77.22	76.63
√		√	8.74	11.6	119.1	73.74	73.48
	√	√	9.67	16.5	142.9	76.92	76.69
√	√	√	10.00	13.0	104.2	**77.91**	**77.62**

Note: DCNC2f represents the module in which deformable convolution replaces the traditional convolution in the C2f module. “Params” indicates parameters, and “FLOPs” stand for floating-point operations.

In order to comprehensively assess the performance disparities between the proposed INNM model and the baseline model, we carried out experimental verification using the same test set. Our aim was to compare the models according to several performance indicators, such as the number of parameters, floating-point operations, inference speed, accuracy, and F_{score}. Table 2 presents the performance results of the INNM model in comparison with the baseline model, as well as the models formed by introducing deformable convolution, the CloFormer attention mechanism, and the three-stream hybrid CNN-ConvBiLSTM network.

In Table 2, the baseline model and the YOLOv8s-DCNC2f-cls model perform best concerning the number of parameters and inference speed, however, the accuracy and F_{score} of them are relatively low. This indicates that the single deep neural network model performs poorly in the facial dysphagia intensity level classification task and has difficulty in accurately recognizing multiple categories of facial dysphagia intensity. In comparison to the baseline model, although the INNM model had an increase in the quantity of parameters and floating-point operations, its accuracy and F_{score} were enhanced by 37.23% and 41.43% respectively. In addition, the INNM model achieved the inference speed of 104 FPS on the test workstation, which indicates that the model can achieve real-time recognition of facial dysphagia intensities on conventional hardware devices. In the task of classifying facial dysphagia intensity for intelligent meal-assisting robotics, real-time processing and high accuracy are essential requirements. Consequently, the INNM model demonstrates a significant performance advantage over other models in terms of accuracy, making it well-suited for the task of facial dysphagia intensity detection in meal-assisting robotics.

In Table 2, the INNM model shows superior performance compared to the single deep neural network models in the facial dysphagia intensity classification task. This is probably because the INNM model effectively combines the fine-grained spatial information extraction ability of deformable convolution, the local high-frequency and global low-frequency contextual information of the CloFormer attention mechanism, and the time-series memory ability of convolutional BiLSTM. In addition, as shown in Table 2, all models incorporating the CloFormer attention mechanism outperformed those that did not, in terms of accuracy and F_{score}. This improvement can likely be attributed to the ability of the CloFormer attention mechanism to effectively process sequential data and capture key features within the sequence [34]. Consequently, this enhances the capacity of models to analyze video data related to facial dysphagia

expressions over time. These results confirm the effectiveness of incorporating the CloFormer attention module in the multi-categorization task of facial dysphagia intensity.

4.2 Comparison to SOTA models

For evaluating the performance disparities between the proposed INNM integrated model and different classification models for facial dysphagia intensity classification, we conducted comparative experiments involving SOTA single deep neural network models and advanced integrated facial expression classification models. The experiment results are presented in Table 3.

The classifiers of most single deep neural network models mainly consist of convolutional and fully connected layers to achieve effective classification of objects. In Table 3, the INNM model shows significant improvement in accuracy metrics compared to the single deep neural network models. In addition, the INNM model achieves the highest F_{score} metrics for each facial dysphagia intensity category, and the F_{score} for each category is significantly higher than that of the single deep neural network models. This verifies the superiority of the INNM model in facial dysphagia intensity classification.

Table 3 Comparison of the proposed integrated neural network model (INNM) with SOTA models.

Models	Classifier	Accuracy (%)	F_{score}-Moderate (%)	F_{score}-Normal (%)	F_{score}-Severe (%)	F_{score}-Slight (%)
YOLOv3-cls [37]	CNN+FC	35.85	40.71	4.63	79.13	1.27
YOLOv5s-cls [38]	CNN+FC	36.93	45.26	2.26	79.78	2.10
YOLOv6s-cls [39]	CNN+FC	39.89	50.22	4.77	86.37	0.74
YOLOv8n-cls [18]	CNN-FC	39.68	53.87	0.60	82.64	3.06
YOLOv8s-cls	CNN+FC	40.68	52.84	2.21	85.17	4.58
YOLOv8m-cls	CNN+FC	40.38	52.19	1.58	87.78	0.31
YOLOv8l-cls	CNN+FC	43.82	53.94	9.16	86.17	2.74
YOLOv8x-cls	CNN+FC	43.70	55.30	9.70	88.70	7.56
Rodriguez [26]	CNN+LSTM	65.79	45.73	91.57	68.19	60.54
Bellantonio [40]	CNN+RNN	56.79	54.86	52.74	83.76	20.18
Mohammad [41]	CNN+LSTM	42.37	56.45	10.26	69.46	8.17
Ghazal [23]	PCA+CNN+RNN	70.86	50.43	90.26	78.73	65.57
Ghazal [24]	Ensemble CNN+RNN	68.98	46.25	90.89	67.98	62.39
Proposed INNM	**Converged CNN + ConvBiLSTM**	**77.91**	**61.18**	**97.67**	**82.21**	**69.43**

The task of facial expression analysis necessitates models with robust feature extraction and time-series memory capabilities. While single deep neural network models excel in feature extraction, their performance in the complex classification of

facial dysphagia intensity is comparatively limited. Therefore, researchers usually use a combination of integrated CNNs and RNNs to enhance the effectiveness of facial expression classification. For comparing the performance of the integrated model proposed by researchers and the INNM model proposed in this paper in facial dysphagia intensity classification, we carried out side-by-side comparison experiments. The results of these experiments are presented in Table 3. The integrated models proposed by researchers such as Rodriguez [26], Bellantonio [40], Mohammad [41], and Ghazal [23, 24] perform well in the other domains of facial expression, such as facial pain level classification. However, for facial dysphagia intensity classification, the INNM integrated model exhibits higher accuracy and single-category F_{score}. This improvement could be attributed to the incorporation of deformable convolution in the INNM model, which enhances the models' ability to capture fine-grained spatial information. Furthermore, the INNM integrated model employs the CloFormer attentional mechanism to improve its perception of localized high-frequency information and global low-frequency information. Furthermore, the INNM model implements the jumping-connection strategy along with a CNN-ConvBiLSTM network within the converged CNN-ConvBiLSTM classifier. This method remarkably increases the ability of models to integrate long-term and short-term temporal dependencies and information across image frames, thus further enhancing model accuracy.

In conclusion, the results of the side-by-side comparison experiments demonstrate that the INNM model proposed significantly outperforms both the individual deep neural network models and several other advanced facial expression analysis models in classifying the intensity levels of facial dysphagia.

Table 4 Comparison of DCNC2f in different positions in the test set for facial dysphagia intensity.

1	2	3	4	Params (M)	FLOPs (G)	FPS	Accuracy (%)	F_{score} (%)	P1 (%)	P2 (%)	P3 (%)	P4 (%)
				5.08	12.5	263.2	40.68	36.19	69.52	1.63	87.19	4.24
√				5.09	12.3	243.9	41.08	36.75	72.15	1.74	85.40	4.85
√	√			5.16	11.2	196.1	41.70	36.56	71.20	1.23	91.31	2.90
√	√	√		5.28	9.8	172.4	42.99	39.70	69.69	14.97	83.84	3.34
√	√	√	√	5.41	8.9	161.3	43.46	40.18	65.49	13.07	89.09	6.02

Note: Numbers 1, 2, 3, and 4 denote the DCNC2f module improved by deformable convolution with C2f to replace the C2f module in four different positions; P1, P2, P3, and P4 denote the precision of Moderate, Normal, Severe, and Slight in a single category, respectively.

4.3 Ablation experiment results

For verifying the efficacy of integrating deformable convolution, the CloFormer attention mechanism, the ConvBiLSTM module, and the jumping-connection strategy in improving model performance, we carried out ablation experiments on the facial dysphagia test set. The results and analysis regarding the impact of each module on model performance are presented in detail below.

Table 4 presents the results of incorporating the number and position of deformable convolutions into the baseline model and their effects on model performance. As can be seen from Table 4, although the number of parameters in the models increases slightly when deformable convolutions are added, the amount of floating-point operations decreases. This shows that substituting classical convolutions with deformable convolutions in the four C2f modules improves the computational efficiency of models. Moreover, as the quantity of deformable convolutions grows, the model shows improvement in both accuracy and F_{score} metrics. This enhancement might be ascribed to the capability of deformable convolutions to dynamically adjust the sampling positions of the convolution kernel according to the input data. By adaptively modifying the receptive field at each position, deformable convolutions enhance the capacity to capture fine-grained spatial information, thereby improving its overall accuracy. Although the accuracy of models improved across all categories of facial dysphagia intensity, its performance in the normal and moderate dysphagia categories remained relatively lower. This discrepancy may be attributed to the fact that models incorporating deformable convolutions excel in feature extraction from single-frame images, but are less effective in capturing temporal information associated with time-series data, such as facial dysphagia expressions. Even though there is a decline in inference speed as the number of deformable convolutions rises, the model still manages to reach an inference speed of 161.3 FPS, thus fulfilling real-time requirements. Accordingly, these findings confirm the efficacy of incorporating deformable convolutions into models.

Table 5 shows the results after introducing the CloFormer at different positions in the backbone network. As shown in Table 5, when the CloFormer attention mechanism is integrated into the backbone network of the baseline model, specifically following the first to fourth C2f modules, results in an increase in both computational load and FLOPs. However, the inference speed of models achieves 208.3 FPS. This indicates that, despite the additional computational burden introduced by the CloFormer mechanism, its impact on model inference speed is relatively minimal, allowing for

efficient real-time processing to be maintained.

Table 5 Comparison of CloFormer at different positions in the test set of dysphagia intensity.

1	2	3	4	Params (M)	FLOPs (G)	FPS	Accuracy (%)	F_{score} (%)	P1 (%)	P2 (%)	P3 (%)	P4 (%)
				5.08	12.5	263.2	40.68	36.19	69.52	1.63	87.19	4.24
√				5.10	13.9	87.0	71.81	71.68	56.46	84.98	79.61	64.02
	√			5.16	13.8	200.0	71.98	71.77	58.75	85.87	79.11	62.34
		√		5.40	13.8	200.0	71.72	72.13	68.08	84.87	69.55	63.91
			√	6.33	13.8	208.3	72.61	72.41	59.86	78.31	85.87	64.58

Note: The numbers 1, 2, 3, and 4 signify the addition of the CloFormer module following the C2f module at four distinct positions; P1, P2, P3, and P4 represent the precision under the individual categories of Moderate, Normal, Severe, and Slight, respectively.

Table 6 Results of CNN-ConvBiLSTM with different number of branches in the test set.

1	2	3	Params (M)	FLOPs (G)	FPS	Accuracy (%)	F_{score} (%)	P1 (%)	P2 (%)	P3 (%)	P4 (%)
			5.08	12.5	263.2	40.68	36.19	69.52	1.63	87.19	4.24
√			6.46	13.6	217.4	45.32	42.74	72.82	16.43	88.25	3.68
	√		5.47	12.8	227.3	44.11	39.28	79.75	2.24	89.42	4.85
		√	4.90	12.3	238.1	45.01	42.81	70.58	14.25	86.57	8.53
√	√		7.50	14.4	192.3	48.62	45.66	73.71	28.83	89.92	19.51
√		√	6.93	13.9	204.1	49.61	46.58	72.54	32.31	88.80	4.74
	√	√	5.95	13.1	200.0	55.77	53.04	69.63	44.36	94.32	14.72
√	√	√	7.98	14.8	178.6	70.72	70.12	49.87	88.85	81.11	60.10

Note: In the table, the numbers 1, 2, and 3 respectively represent branch 1, branch 2, and branch 3; and branches 1, 2, and 3 are connected in parallel with each other; P1, P2, P3, and P4 denote the precision of Moderate, Normal, Severe, and Slight, respectively.

Additionally, as shown in Table 5, the incorporation of the CloFormer attention mechanism into the backbone network of the baseline model, specifically from the first to the fourth C2f module, has led to improvements in both accuracy and F_{score} metrics. Specifically, in comparison to the baseline model, the model constructed by introducing the CloFormer attention module after the fourth C2f module witnessed an improvement of 31.93% and 36.22% in its accuracy and F_{score} metrics respectively. This is likely due to the fact that the CloFormer module effectively captures the dependencies between different frame images in the facial dysphagia time series via the attention mechanism. Additionally, with the introduction of the CloFormer module, the model significantly enhanced the recognition accuracy metrics for each dysphagia intensity category. This is probably because the model constructed with the introduction of the CloFormer module can better capture the global and local contextual information in the

input data, thereby enhancing the understanding of the interrelationships among the features and consequently improving the recognition accuracy. In conclusion, the above results confirm the effectiveness of introducing the CloFormer module in enhancing the accuracy and precision metrics of models.

To confirm the influence of the number of branching layers of CNN-ConvBiLSTM on the model's performance, this research carried out comparative experiments on the facial dysphagia dataset. Respectively, single-layer, two-layer, and three-layer CNN-ConvBiLSTM branching structures were constructed in the baseline model, and the experimental results are displayed in Table 6.

As shown in Table 6, compared to the single-layer and two-layer CNN-ConvBiLSTM branching structures, the three-layer CNN-ConvBiLSTM branching structure shows an increase in both the quantity of parameters and FLOPs. However, it achieves a significant improvement in accuracy, F_{score}, and single-category precision metrics. This is probably due to several reasons. First, the temporal data of facial dysphagia-based videos usually contains rich spatiotemporal information, and the three-layer network structure can capture this information more efficiently, therefore improving the understanding and analyzing ability of the content of image frames. Second, CNN can extract multilevel features from the raw input, which range from low-level edge and texture information to high-level semantic features, all of which are crucial to the understanding of video frame sequences. In addition, the ability of ConvBiLSTM to handle the bidirectional information flow of the sequence data further optimizes the understanding of the relationship between the front and back frames in the video. Therefore, the hybrid three-layer CNN-ConvBiLSTM branching structure not only further enhances the advantages of CNN and ConvBiLSTM but can more comprehensively parse the spatiotemporal dynamics between image frames. This demonstrates that increasing the model depth can facilitate the learning of deeper features, thereby significantly improving the performance of models on classification tasks. Although the inference speed of the three-layer CNN-ConvBiLSTM branching structure is reduced, it is still able to meet the demands of real-time classification. In addition, the single-layer and two-layer CNN-ConvBiLSTM branching structures have lower accuracies in the normal and moderate categories, which is a limitation in terms of human-robot interaction safety for intelligent meal-assisting robots. In conclusion, this work verifies the effectiveness of the number of branching layers of CNN-ConvBiLSTM in improving the model performance.

To verify the effect of adopting the jumping-connection strategy on the model performance in multi-branch CNN-ConvBiLSTM networks, we conducted comparative experiments on the facial dysphagia test set, which used parallel connection with two-layer and three-layer structures compared with jumping-connection followed by parallel connection, and the results of experiments are shown in Table 7. Table 7 shows that compared with the multi-branch CNN-ConvBiLSTM network using parallel connection, the model using the jumping-connection strategy has a slight increase in the number of parameters and FLOPs, however, there is a significant increase in accuracy, F_{score}, and single-category precision on dysphagia intensity. This is probably because the approach using the jumping-connection strategy can effectively integrate features from different deep network layers, thereby enabling the model to understand the complex information in the video frames in more comprehensive ways. In addition, the jumping-connection strategy enables models to learn richer feature representations by introducing additional paths, which further enhances the generalization ability of models. Although the multi-branch CNN-ConvBiLSTM network with the jumping-connection strategy slightly reduces the inference speed, it can still achieve real-time classification results.

Table 7 Comparison results of multi-branch CNN-ConvBiLSTM with different connectivity in the test set.

Connection methods	Params (M)	FLOPs (G)	FPS	Accuracy (%)	F_{score} (%)	P1 (%)	P2 (%)	P3 (%)	P4 (%)
{1, 2}	7.50	14.4	192.3	48.62	45.66	73.71	28.83	89.92	19.51
{[1, 2]}	7.63	14.5	188.7	67.66	67.90	64.10	85.31	64.02	56.74
{1, 3}	6.93	13.9	204.1	49.61	46.58	72.54	32.31	88.80	4.74
{[1, 3]}	7.39	14.3	192.3	70.45	70.12	57.25	78.48	84.41	59.76
{2, 3}	5.95	13.1	200.0	55.77	53.04	69.63	44.36	94.32	14.72
{[2, 3]}	6.25	13.4	196.1	67.10	66.72	58.03	75.34	75.36	58.37
{1, 2, 3}	7.98	14.8	178.6	70.72	70.12	49.87	88.85	81.11	60.10
{[1, 2, 3]}	8.42	15.1	166.7	70.92	70.90	59.20	84.19	73.69	64.97

Note: In the table, {a, b, c} denotes that branches a, b, and c are only connected in parallel; {[a, b, c]} denotes that different branches are first jumped to each other and then connected in parallel; P1, P2, P3, and P4 denote the precision of the individual categories of Moderate, Normal, Severe, and Slight, respectively.

In conclusion, we verified the effectiveness of each improvement in this study through a series of ablation experiments. Specifically, we validated and analyzed the effectiveness of the introduction of deformable convolution, CloFormer, the number of branching layers of the CNN-ConvBiLSTM network, and jumping-connection strategy

on the performance improvement of models.

4.4 Limitations

The INNM model proposed in this paper has several limitations. First, the number of parameters of the INNM model is relatively high, therefore, we plan to continue to explore the introduction of new modules or optimization of the INNM model architecture to reduce the number of parameters of the model as much as possible in subsequent studies. Moreover, this study verified the performance of the INNM model in facial dysphagia intensity classification. Future work will be dedicated to applying the INNM model to other facial expression analysis tasks to further enhance the application value and usefulness of the INNM model.

5 Conclusions

This study aims to develop a robust facial expression analysis technique for human-robot interaction (HRI) within intelligent meal-assisting robotics, focusing on the detection of dysphagia intensity levels using an artificial intelligence approach. To achieve this objective, we propose an Integrated Neural Network Model (INNM) designed to automatically detect dysphagia intensity levels from facial video frames. The INNM architecture consists of two main components: a feature extraction network and a converged CNN-ConvBiLSTM network. In the feature extraction stage, we optimized the backbone of the YOLOv8s-cls model by substituting classical convolutions with deformable convolutions, significantly enhancing the model's ability to capture fine spatial details of facial expressions. Additionally, the CloFormer attention mechanism was introduced to improve the model's capacity to perceive both local high-frequency and global low-frequency information, thereby increasing its sensitivity to nuanced facial changes. In the converged CNN-ConvBiLSTM network, we developed a novel algorithm that integrates a three-layer hybrid CNN with ConvBiLSTM, leveraging a jumping-connection strategy. This approach effectively strengthens the model's memorization ability in handling long-term and short-term temporal sequences while enhancing its capability to integrate and interact with spatial information. The jumping connections further improve the model's robustness in processing complex time-series data. To validate the performance of the INNM model, extensive experiments were conducted on a large facial dysphagia dataset. These experiments not only compared our model against baseline models but also comprehensively evaluated it against single neural network models and current state-

of-the-art methods for facial expression analysis. The results demonstrate that the INNM model exhibits significant advantages in classifying dysphagia intensity levels, achieving notably enhanced accuracy. Specifically, Compared to single neural network models, the INNM model improved accuracy by 37.23% and F_{score} by 41.43%. Relative to several state-of-the-art integrated models for facial expressions, the INNM model achieved improvements in accuracy ranging from 7.05% to 35.54%. Ablation studies further verified the effectiveness of key enhancements, including deformable convolution, the CloFormer attention mechanism, the number of branching layers in the converged CNN-ConvBiLSTM network, and the jumping-connection strategy. Each component contributed significantly to the overall performance improvement of the model.

This research provides critical technical support for ensuring safety in HRI applications of intelligent meal-assisting robots and advances the application of AI in facial expression analysis. By integrating sophisticated neural network models with real-time facial expression detection, our work contributes to the development of smarter, safer robotic systems that can enhance user experience and safety in everyday applications. In future research, we will explore the introduction of new modules or optimize the INNM model architecture to minimize the number of model parameters, thereby improving computational efficiency. Additionally, we plan to apply the INNM algorithm to other facial expression analysis tasks to generalize its application value and usefulness, expanding its potential impact across various domains.

Data availability statement

The original contributions presented in the study are included in the article/supplementary material, further inquiries can be directed to the corresponding author.

Author contributions

Yuhe Fan: analysis, experiments, drafting, and revising. Lixun Zhang: funding, methods, reviewed, and revised. Zhenhan Wang: analyzed, discussed, and revised. Zekun Yang: collected videos and created datasets. Huaiyu Che: created and validated dataset. Feng Xue: trained and tested models. Canxing Zheng: created and examined dataset. Keyi Wang: analyzed results and reviewed manuscript. Xingyuan Wang: reviewed and revised. All authors agree to be accountable for all aspects of the work.

Declaration

The authors declared no potential conflicts of interest with respect to the research,

authorship, and/or publication of this article.

Acknowledgments

The research work is supported by National Key R&D Program of China under grant 2020YFC2007700 and Fundamental Research Funds for the Central Universities of China under grant 3072022CF0703.

References

1. Yuhe F, Lixun Z, Canxing Z, Yunqin Z, Xingyuan W, Jinghui Z (2024) Real-time and accurate meal detection for meal-assisting robots. J Food Eng 371: 111996.
2. Yuhe F, Lixun Z, Canxing Z, Yunqin Z, Keyi W, Xingyuan W (2024) Real-time and accurate model of instance segmentation of foods. J Real-Time Image Pr 21: 80.
3. Hutchison A R, Wishart L R, Brown B, Ward E C, Porceddu S (2021) Exploring the interplay between radiotherapy dose and physiological changes in the swallowing mechanism in patients undergoing (chemo) radiotherapy for oropharynx cancer. Dysphagia 37: 567-577.
4. Ikuko O, Satoru E (2022) Are oropharyngeal dysphagia screening tests effective in preventing pneumonia. J Clin Med 11(2): 370.
5. Farneti D (2017) Voice and dysphagia. Dysphagia 257–274.
6. Hengling Z, Yangyang J, Shenghan W, Fei H, Fangzhou R, Zhonghao Z (2022) Dysphagia diagnosis system with integrated speech analysis from throat vibration. Expert Syst Appl 204: 117496.
7. Yuhe F, Lixun Z, Xingyuan W, Keyi W, Lan W, Zhenhan W, Feng X, Jinghui Z, Chao W (2022) Rheological thixotropy and pasting properties of food thickening gums orienting at improving food holding rate. Appl Rheol 32: 100–121.
8. Yuhe F, Lixun Z, Jinghui Z, Yunqin Z, Xingyuan W (2022) Viscoelasticity and friction of solid foods measurement by simulating meal-assisting robot. Int J Food Prop 25 (1): 2301–2319.
9. Yuhe F, Lixun Z, Canxing Z, Xingyuan W, Keyi W, Jinghui Z (2023) Motion behavior of non-Newtonian fluid-solid interaction foods. J Food Eng 347: 111448.
10. Yuhe F, Lixun Z, Canxing Z, Feng X, Zhenhan W, Xingyuan W, Lan W (2023) Contact forces and motion behavior of non-Newtonian fluid–solid food by coupled SPH–FEM method. J Food Sci 88(6): 1–21.
11. Yuhe F, Lixun Z, Caixing Z, Xingyuan W, Jinghui Z, Lan W (2024) Instance segmentation of faces and mouth-opening degrees based on improved YOLOv8 method. Multimedia Syst 30: 269.
12. Yuhe F, Lixun Z, Canxing Z, Zhenhan W, Jinghui Z, Xingyuan W (2024) Real-time and accurate detection for face and mouth openings in meal-assisting robotics. Signal Image Video P 18: 9257-9274.
13. Muhammad S, Fath U M U, Mohib U, Georgia C, Faouzi A C, Mohammad H (2023) A comprehensive survey on deep facial expression recognition: challenges, applications, and future guidelines. Alex Eng J 68: 817-840.
14. Qingxiang W, Huanxin Y, Yanhong Y (2018) Facial expression video analysis for depression detection in Chinese patients. J Vis Commun Image R 57: 228-233.
15. Adyapady R R, Annappa B (2023) A comprehensive review of facial expression recognition techniques. Multimedia Syst 29: 73–103.
16. Taigman Y, Yang M, Ranzato M A, Wolf L (2014) Deepface: closing the gap to human-level performance in face verification. In *CVPR* pp.1701–1708.
17. Sun Y, Wang X, Tang X (2015) Deeply learned face representations are sparse, selective, and robust. In *CVPR* pp. 2892–2900.

18. Glenn J (2023) Ultralytics YOLOv8. https://github.com/ultralytics/ultralytics.
19. Redmon J, Divvala S, Girshick R, Farhadi A (2016) You only look once: Unified, real-time object detection. In: CVPR pp. 779–788.
20. Hu F, Xia G S, Hu J, Zhang L (2015) Transferring deep convolutional neural networks for the scene classification of high-resolution remote sensing imagery. Remote Sens (Basel) 7(11): 14680–707.
21. Zhou J, Hong X, Su F, Zhao G (2016) Recurrent convolutional neural network regression for continuous pain intensity estimation in video. In: CVPR pp. 84–92.
22. Dyer C, Ballesteros M, Ling W, Matthews A, Smith N A (2015) Transition-based dependency parsing with stack long short-term memory. In: ACL IJCNLP pp.334-343.
23. Ghazal B, Xujuan Z, Ravinesh C D, Jeffrey S, Frank W, Hua W (2020) Enhanced deep learning algorithm development to detect pain intensity from facial expression images. Expert Syst Appl 149: 113305.
24. Ghazal B, Xujuan Z, Ravinesh C D, Jeffrey S, Frank W, Hua W (2020) Ensemble neural network approach detecting pain intensity from facial expressions. Artif Intell Med 109: 101954.
25. Rodriguez P, Cucurull G, Gonzàlez J, Gonfaus J M, Nasrollahi K (2022) Deep pain: exploiting long short-term memory networks for facial expression classification. IEEE T Cybernetics 52(5): 3314-3324.
26. Bargshady G, Soar J, Zhou X, Deo R C, Whittaker F, Wang H (2019) A joint deep neural network model for pain recognition from face. In: IEEE ICCCS pp. 52–56.
27. Egede J, Valstar M, Torres M T, Sharkey D (2019) Automatic neonatal pain estimation: an acute pain in neonates database. In: IEEE ACII pp. 1–7.
28. Ding C, Tao D (2017) Trunk-branch ensemble convolutional neural networks for video-based face recognition. IEEE T Pattern Anal 40(4): 1002–1014.
29. Parkhi O M, Vedaldi A, Zisserman A (2015) Deep face recognition. In: BMVC pp. 1-12.
30. Qiong C, Li S, Weidi X, Omkar M P, Andrew Z (2018) VGGFace2: A dataset for recognising faces across pose and age. In: IEEE Face and Gesture pp. 67-74.
31. Ganaie M A, Hu M, Malik A K, Tanveer M, Suganthan P N (2022) Ensemble deep learning: A review. Eng Appl Artif Intel 115: 105151.
32. Dai J, Qi H, Xiong Y, Li Y, Zhang G, Hu H, Wei Y (2017) Deformable convolutional networks. In: ICCV pp. 764–773.
33. He K, Zhang X, Ren S, Sun J (2016) Deep residual learning for image recognition. In: CVPR pp. 770–778.
34. Qihang F, Huaibo H, Jiyang G, Ran H (2023) Rethinking Local Perception in Lightweight Vision Transformer. In: CVPR arXiv:2303.17803.
35. Schmidhuber J (2015) Deep learning in neural networks: an overview. Neural Networks 61: 85–117.
36. Gers F A, Schmidhuber E (2001) LSTM recurrent networks learn simple context-free and context-sensitive languages. IEEE T Neur Net Lear 12(6): 1333–1340.
37. Redmon J, Farhadi A (2018) Yolov3: An incremental improvement. In: CVPR pp. 7794-7803.
38. Jocher G (2021) YOLOv5 by Ultralytics. https://github.com/ultralytics/yolov5.
39. Li C, Li L, Jiang H, Weng K, Geng Y (2022) Yolov6: A single-stage object detection framework

for industrial applications. In: arXiv preprint arXiv:2209.02976.

40. Marco B, Mohammad A H, Pau R, Kamal N, Taisi T (2016) Spatio-temporal Pain Recognition in CNN-Based Super-Resolved Facial Images. Video analytics 151–162.
41. Mohammad A H, Ruben B B, Fatemeh N, Kaustubh K, Christian B L, Ramin I (2018) Deep multimodal pain recognition: a database and comparison of spatio-temporal visual modalities. In: IEEE Press pp. 250–257.
42. Powers D M (2011) Evaluation: from precision, recall and F-measure to ROC, informedness, markedness and correlation. Int J Mach Learn 2(1): 37–63.

 Click here to view linked References

Declaration of conflicting interests

The author(s) declared no potential conflicts of interest with respect to the research, authorship, and/or publication of this article.