FMT/7.3/04D REV. D

REV.	MOD.NO.	DATE	BRIEF DESCRIPTION OF MODIFICATION	MOD. BY	CHD.	APP.

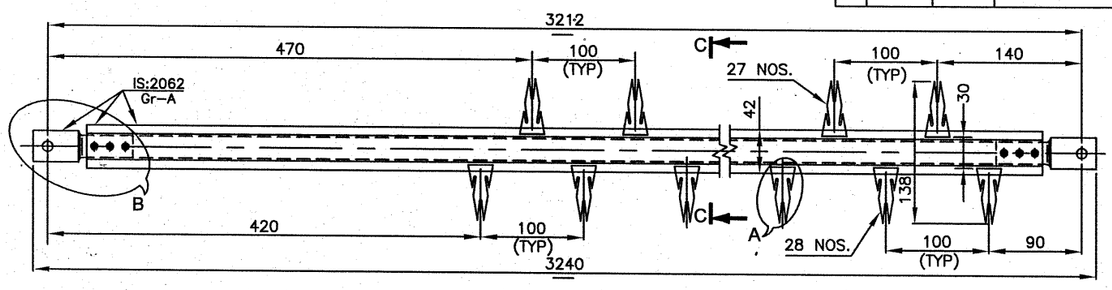

TAIL ESP.

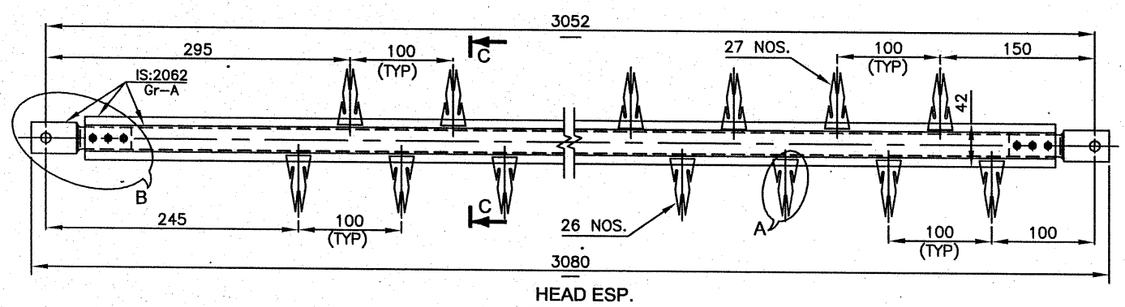

HEAD ESP.

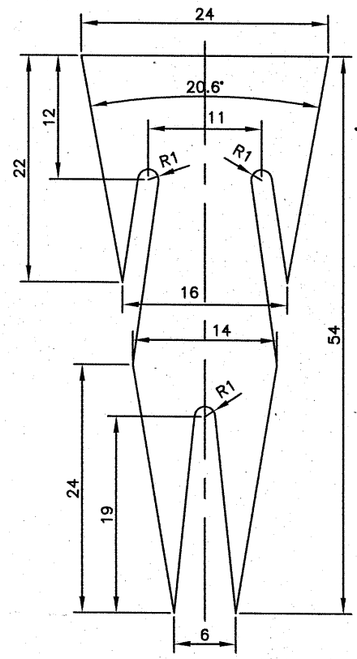

THK. = 1mm.

MATL.– SS.:304

QTY.– 106 NOS.

ENLARGED VIEW - A

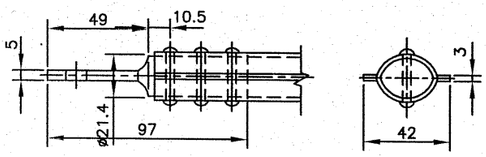

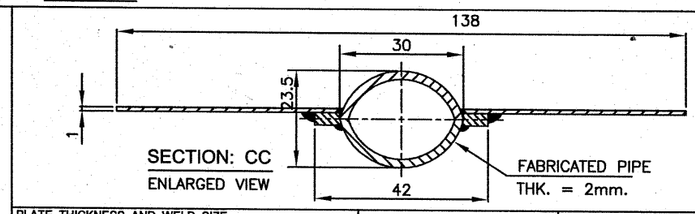

SECTION: CC

ENLARGED VIEW

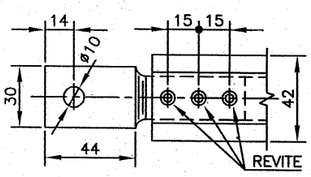

ENLARGED VIEW - B

NOTES :–

1. IF IN DOUBT ASK
2. NOS. IN TRIANGLE DENOTES REVISION
3. REMOVE SHARP EDGES
4. DIMENSIONS ARE IN mm.
5. DIMENSIONS SHOWN IN ▭ ARE CRITICAL

PLATE THICKNESS AND WELD SIZE

PLATE THICKNESS mm.	3 TO 5	6 TO 8	10 TO 16	18 TO 24	26 TO 35	OVER 38
WELD SIZE, mm.	3	5	6	10	14	20

GENERAL TOLERANCES FOR OPEN DIMENSIONS

DIMENSIONS	UPTO 3	3 TO 6	6 TO 30	30 TO 120	120 TO 400	400 TO 1000	1000 TO 2000	2000 TO 4000
FABRICATION	±0.2	±0.3	±0.5	±0.8	±1.2	±2.0	±3.0	±4.0
MACHINING	±0.1	±0.1	±0.2	±0.3	±0.5	±0.8	±1.2	±2.0

THIS DOCUMENT AND ALL INFORMATION THERE–IN CONTAINED ARE CONFIDENTIAL AND PROPERTY OF SESA STERLITE LIMITED AND MUST NOT BE COPIED, MADE PUBLIC OR SHOWN TO THIRD PARTY WITHOUT THE WRITTEN CONSENT OF THE COMPANY

sesa sterlite
a vedanta company

SESA STERLITE LIMITED
DESIGN & CIVIL ENGINEERING DEPARTMENT

SESA IRON ORE

PROJECT: PIEP-BLAST FURNACE & SINTER PLANT

TITLE: HEAD AND TAIL ESP. ELECTRODE FOR SINTER PLANT

			SCALE	SHEET	DRAWING NO.	REV.
DRN.		5–03–2015	1:4	1 OF 1	BF-EXPN-1425	-
CHD.	G.S.GOGATE	9–03–2015				
APP.						

APPROVED
DATE: 11/03/15 SIGN