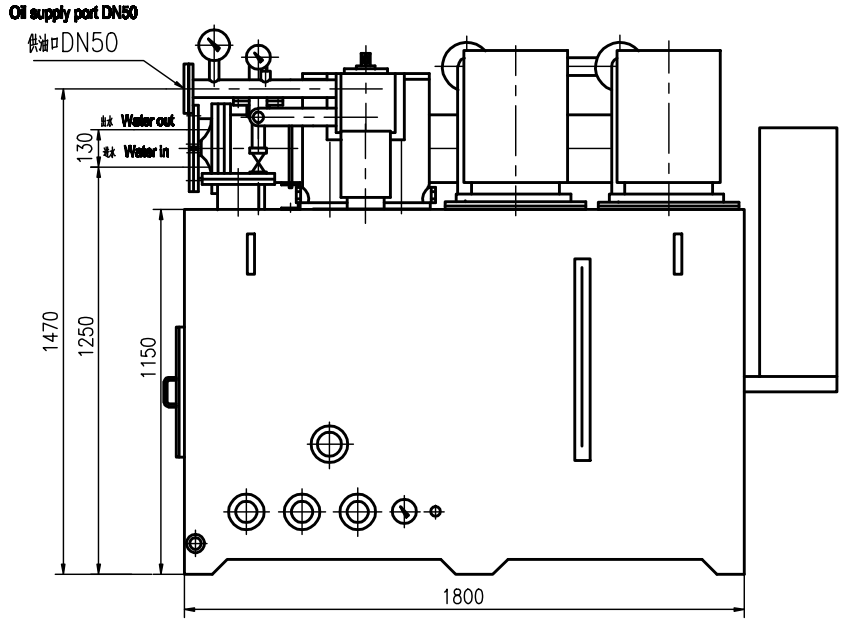

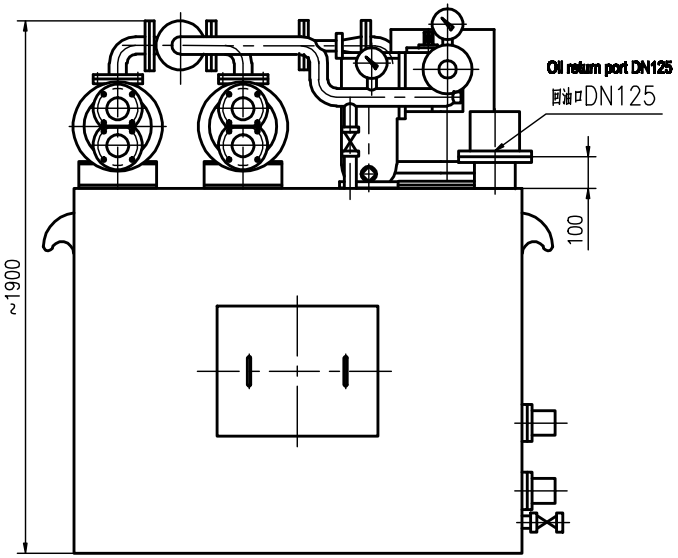

油站参数表 Oil Station Parameter Table		
1	供油量 fuel delivery	200L/min
2	供油压 Oil supply pressure	0.4MPa
3	油箱容积 Oil storage in tank	2.6m³
4	冷却面积 Cooling area	2×14m²
5	油泵电机 Oil pump power	2×7.5KW
6	加热电机 Heating power	3×3kW
7	过滤精度 Filter fineness	50μ
8	回油温度 Oil return temperature	50℃
9	进水温度 Inlet water temperature	≤30℃
10	供油温度 Oil supply temperature	40℃
11	耗水量 water consumption	18m³/h
12	自重 deadweight	2200Kg

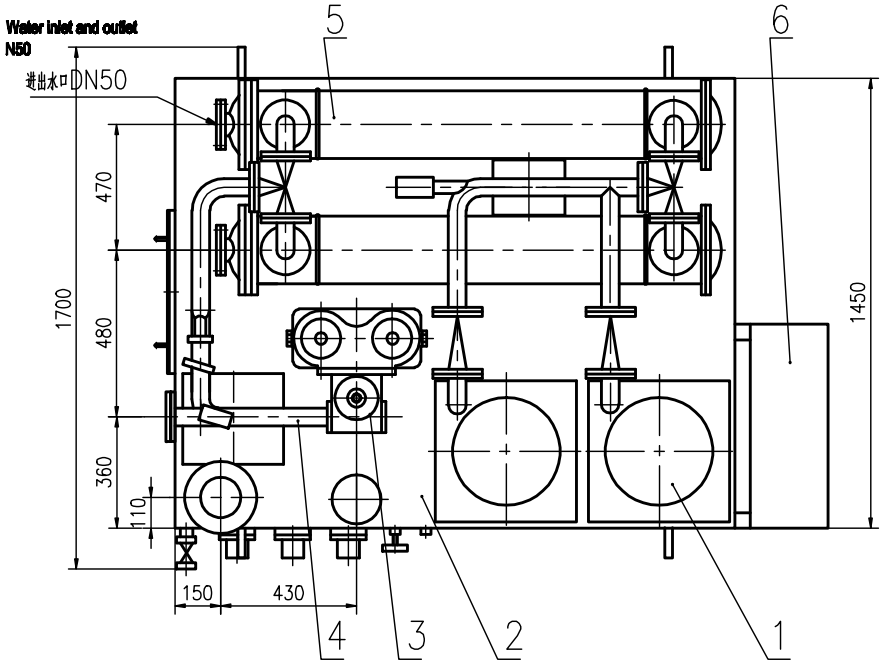

技术要求:

油站按"油站产品验收技术条件"试车验收。

Technical Requirement

Oil station will test and accept as per the "Oil Station Product Accepting Technical Condition".

序号 S/N	代号 Code	名称 Name	数量 No.	材料 Material	单件 Piece	总计 Total 重量 Weight	附注 Note
6		电控柜 electrical control cabinet	1				
5	2CFE-14	冷却器 Condenser 14m²	2				
4		油箱 Oil tank	1				
3		油管路 Oil pipeline	1				
2	SPL-50	过滤器 Filter 20m³/h	1				
1	KBZ200×0.6	油泵 Oil pump 200L/min	2				

设计 Designed by	工艺 Checked by	更改文件号 Modified Doc. No.	签字 Signed	日期 Date	XYZSS-200×0.4油站总图 General Drawing of XYZSS-200×0.4 Oil Station
审核 Reviewed by					图样标记 Drawing Mark / 重量 Weight / 比例 Scale
工艺 Checked by			标准化 Standardized by		
会签 Coordinated by			工艺 Approved by		
批准 Approved by					共 页 Sheet XX 第 页 of XX Sheets
日期 Date			日期 Date		100604-03