Design Block:

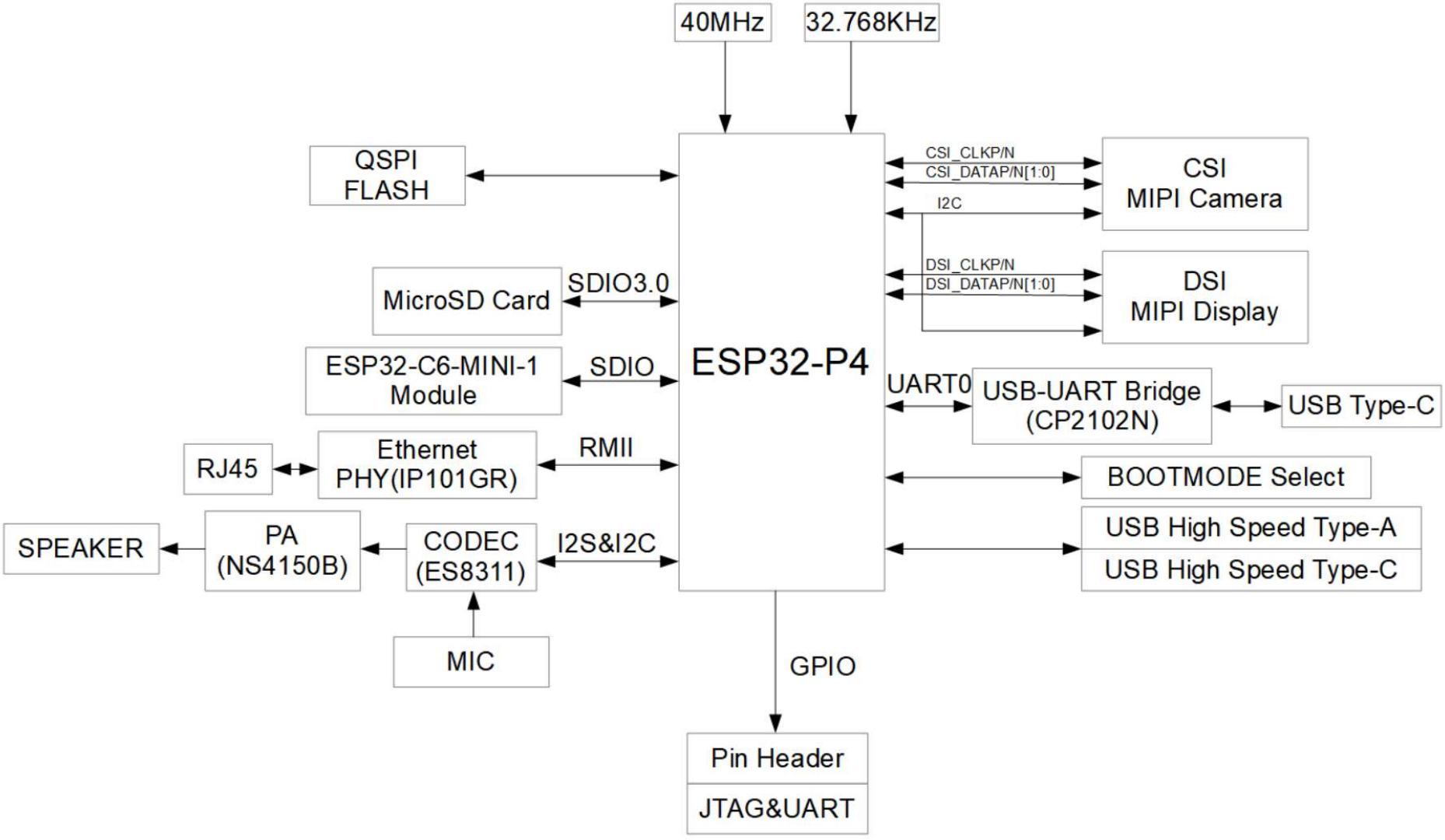

ESPRESSIF			
乐鑫信息科技（上海）股份有限公司			
Title: ESP32-P4_FUNCTION_EV_BOARD			
Size: C	Page Name: 01_DESIGNBLOCK	Rev: 1.4	Proprietary
Date: Tuesday, July 02, 2024		Sheet 1 of 6	

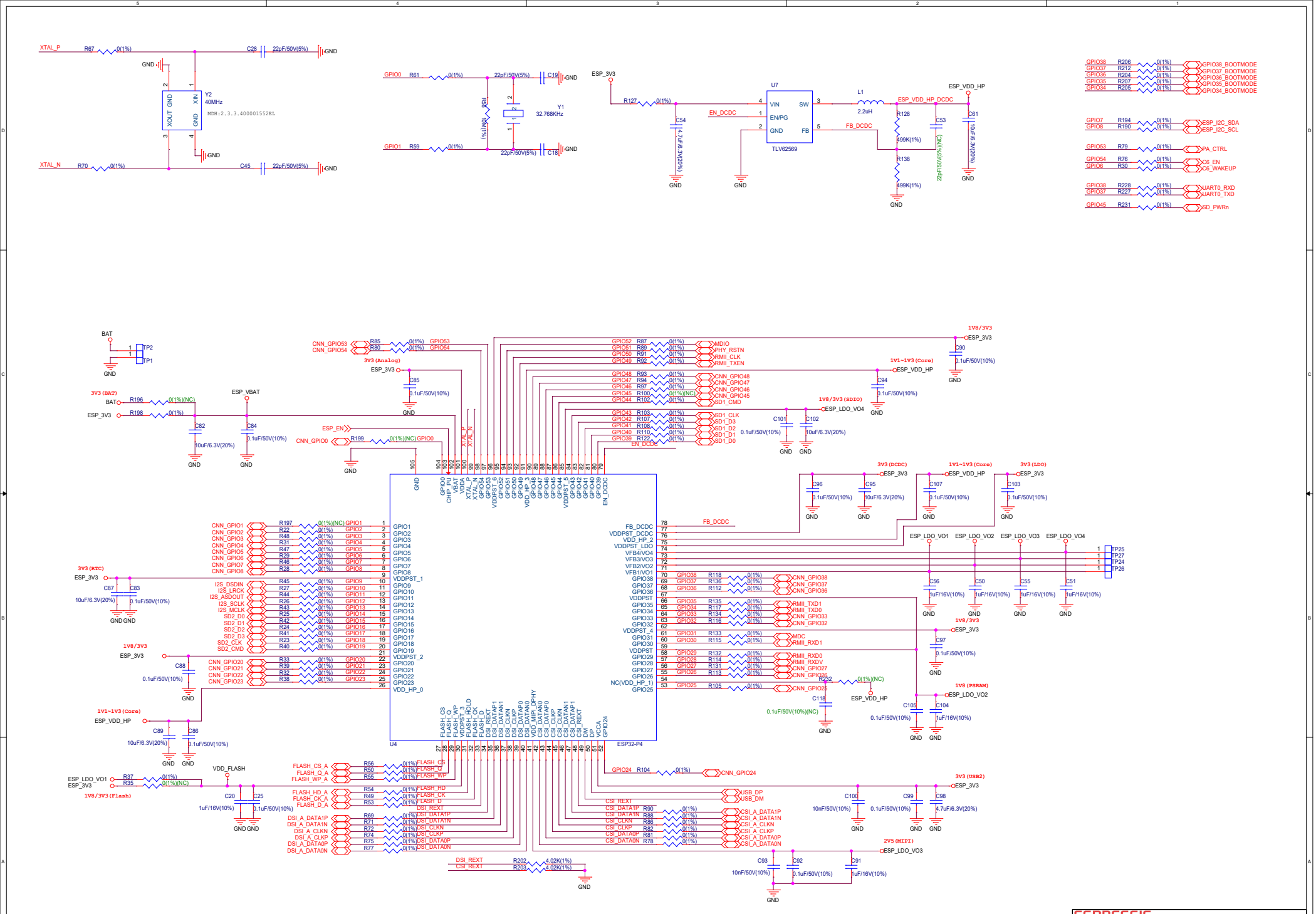

ESPRESSIF

乐鑫信息科技（上海）股份有限公司

Title	ESP32-P4_FUNCTION_EV_BOARD		
Size C	Page Name 02_ESP32-P4	Rev 1.4	Proprietary
Date: Tuesday, July 02, 2024		Sheet 2 of 6	

FLASH:

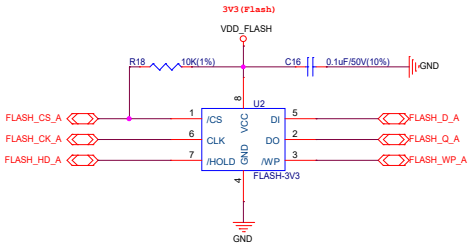

Boot Strapping Pins:

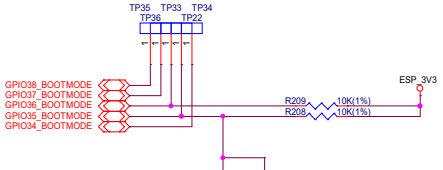

Boot Button:

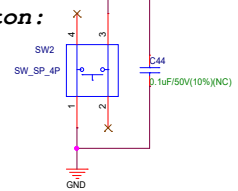

Reset Button:

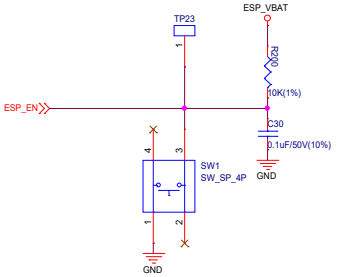

Pin Header For GPIOs:

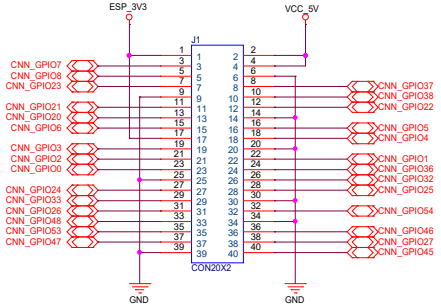

CSI Connector:

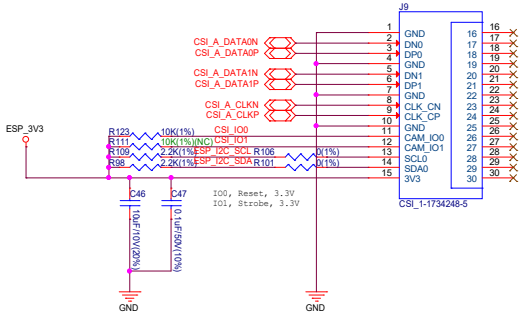

DSI Connector:

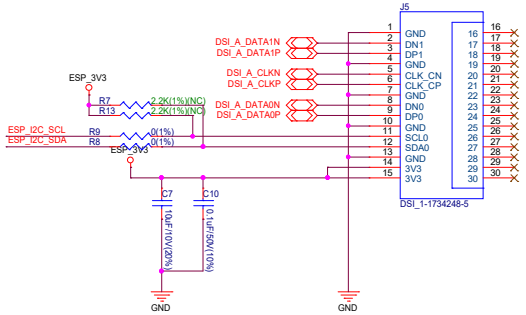

ESPRESSIF			
乐鑫信息科技（上海）股份有限公司			
Title: ESP32-P4_FUNCTION_EV_BOARD			
Size: C	Page Name: 03_FLASH_DBG_CNN	Rev: 1.4	Proprietary
Date: Tuesday, July 02, 2024		Sheet 3 of 6	

Codec:

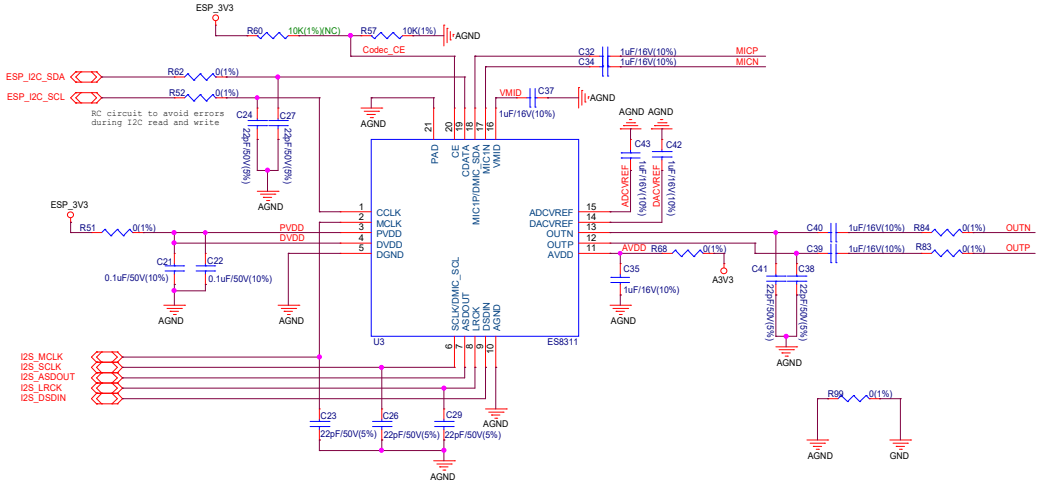

MIC:

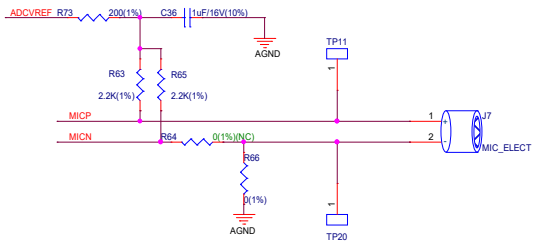

PA&SPEAKER:

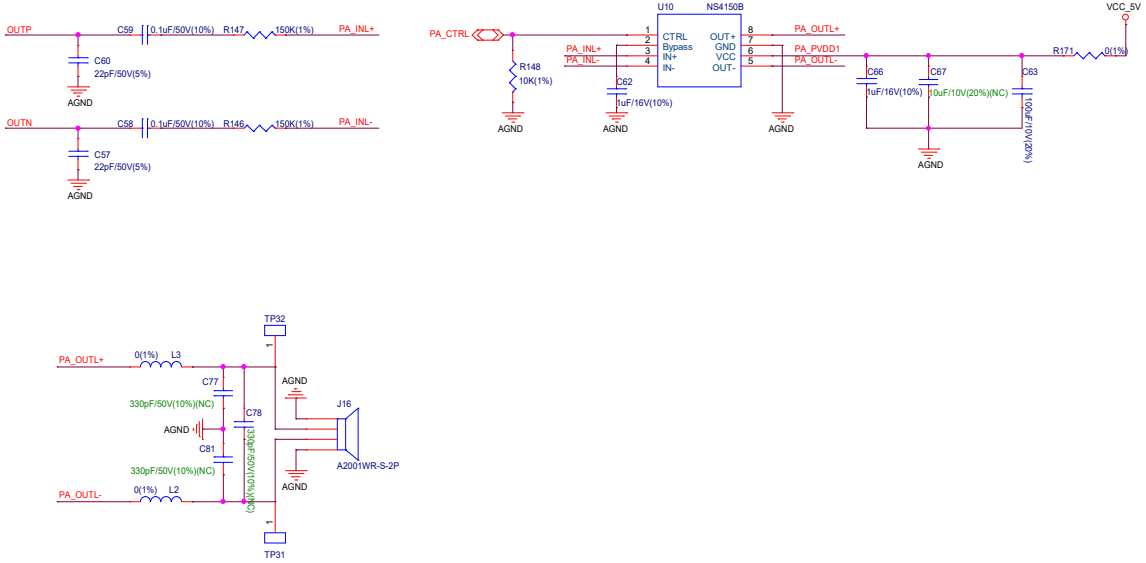

3.3V LDO For AVDD:

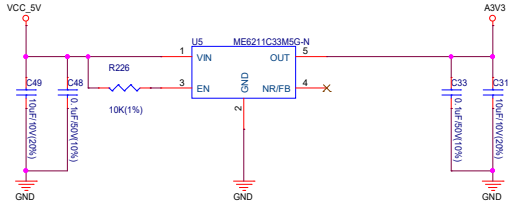

ESPRESSIF			
乐鑫信息科技（上海）股份有限公司			
Title: ESP32-P4_FUNCTION_EV_BOARD			
Size: C	Page Name: 04_Audio	Rev: 1.4	Proprietary
Date: Tuesday, July 02, 2024		Sheet 4 of 6	

RJ45 with Trans

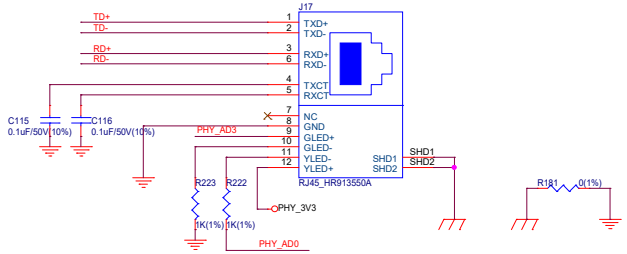

ETHERNET PHY IC

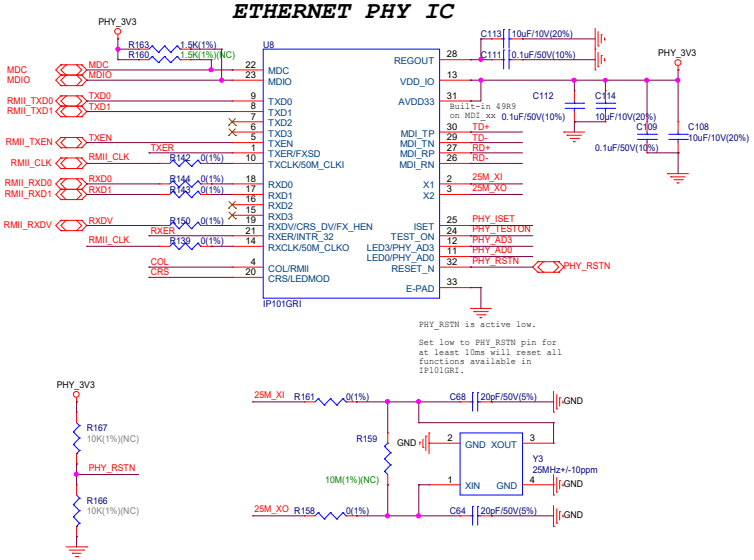

PHY MODE CONFIG

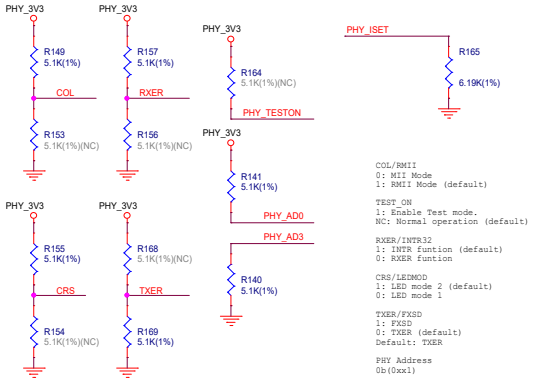

WiFi & BT Module:

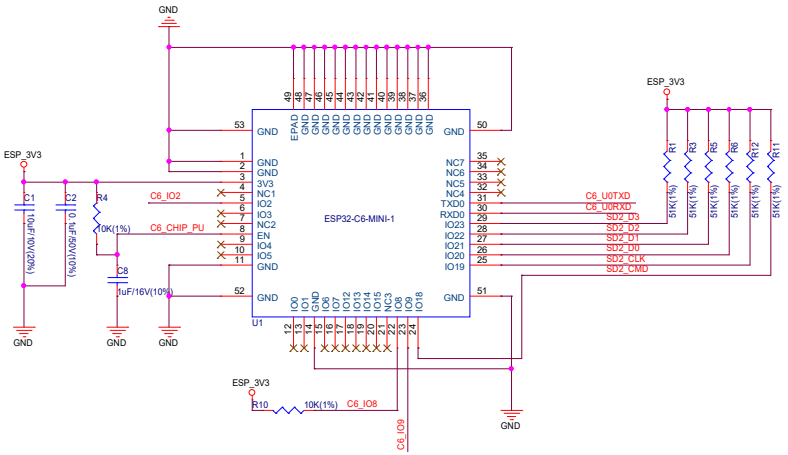

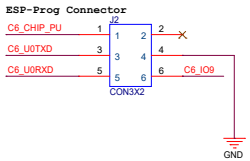

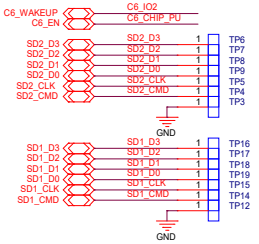

MicroSD Card:

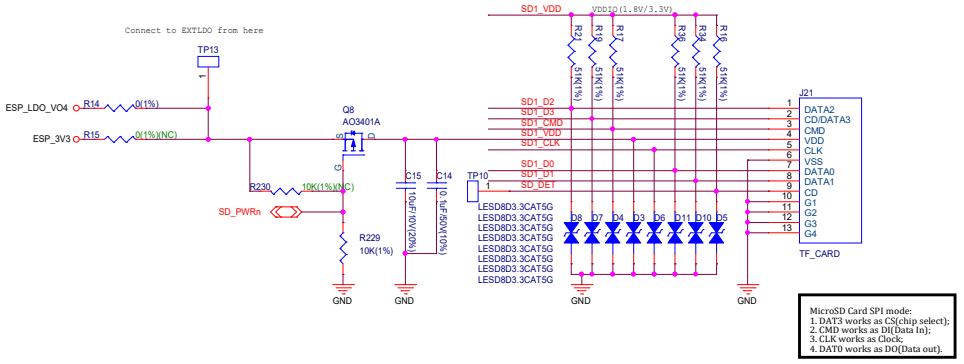

ESPRESSIF
乐鑫信息科技（上海）股份有限公司

Title	ESP32-P4_FUNCTION_EV_BOARD		
Size	Page Name	Rev	Proprietary
C	05_Ethernet_SDMMC_WiFi	1.4	
Date:	Tuesday, July 02, 2024	Sheet	5 of 6

USB High Speed & Power in:

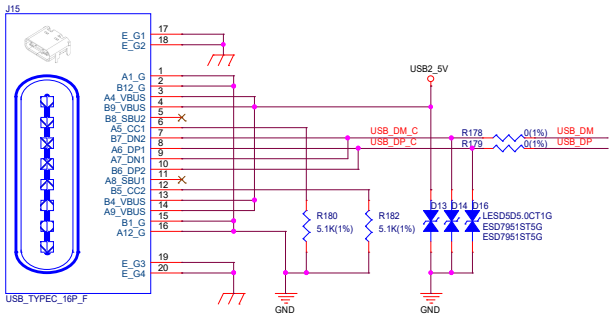

USB Full Speed Slave & Power in (24&25):

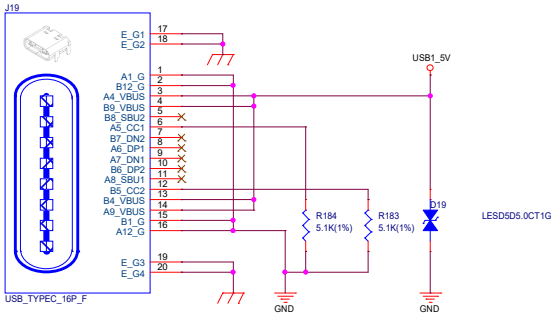

USB Full Speed Slave & Power in (26&27):

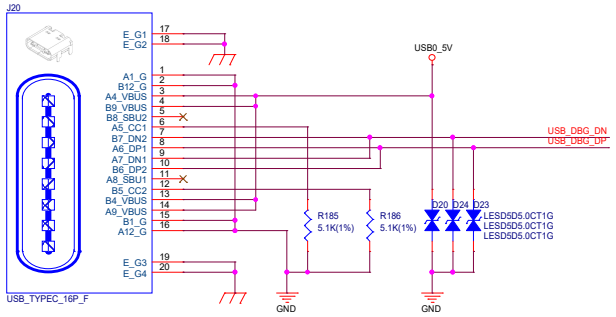

Ideal Diodes:

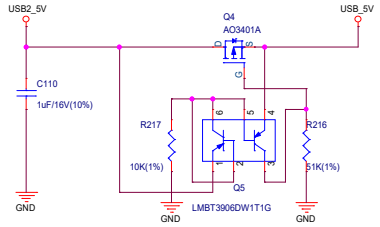

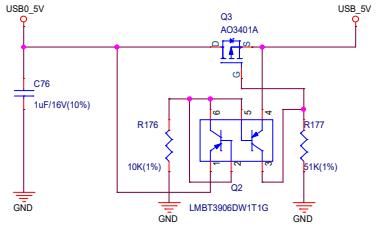

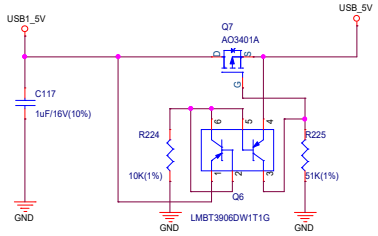

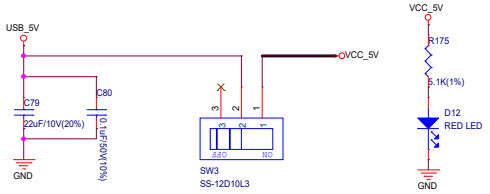

USB to UART:

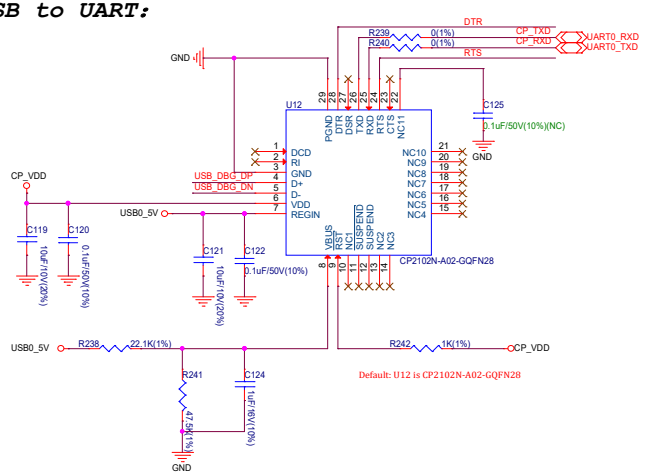

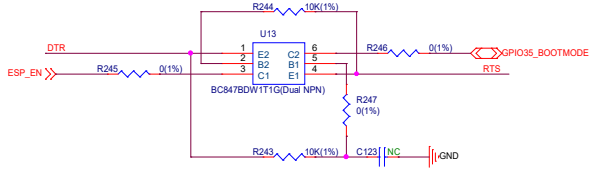

USB High Speed Host:

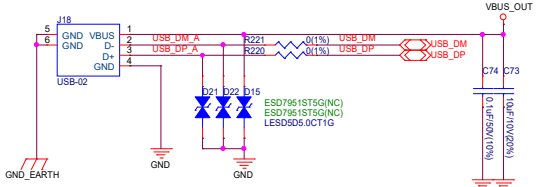

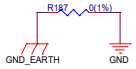

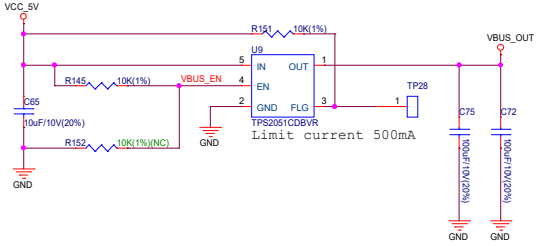

3V3 DC-DC:

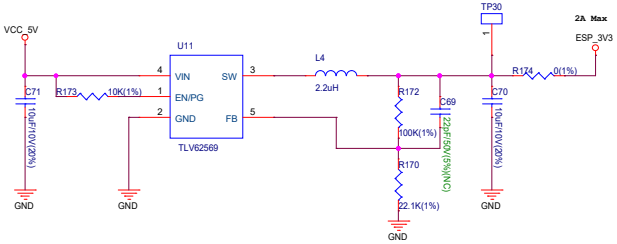

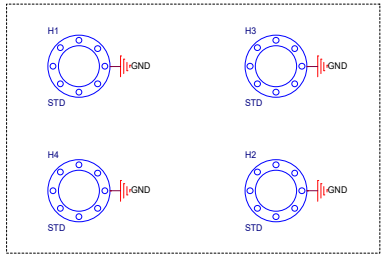

ESPRESSIF

乐鑫信息科技（上海）股份有限公司

Title	ESP32-P4_FUNCTION_EV_BOARD		
Size: C	Page Name: 05_Ethernet_SDMMC_WiFi	Rev: 1.4	Proprietary
Date: Tuesday, July 02, 2024		Sheet 6 of 6	