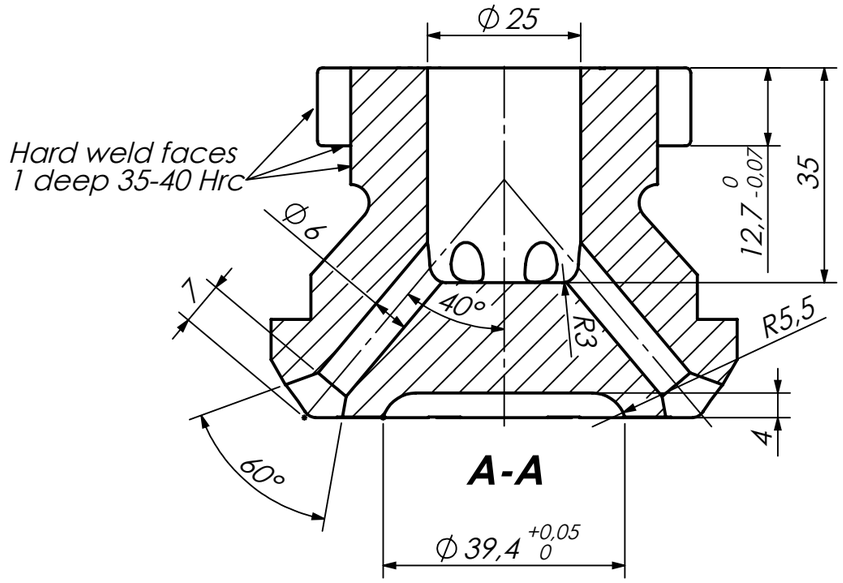

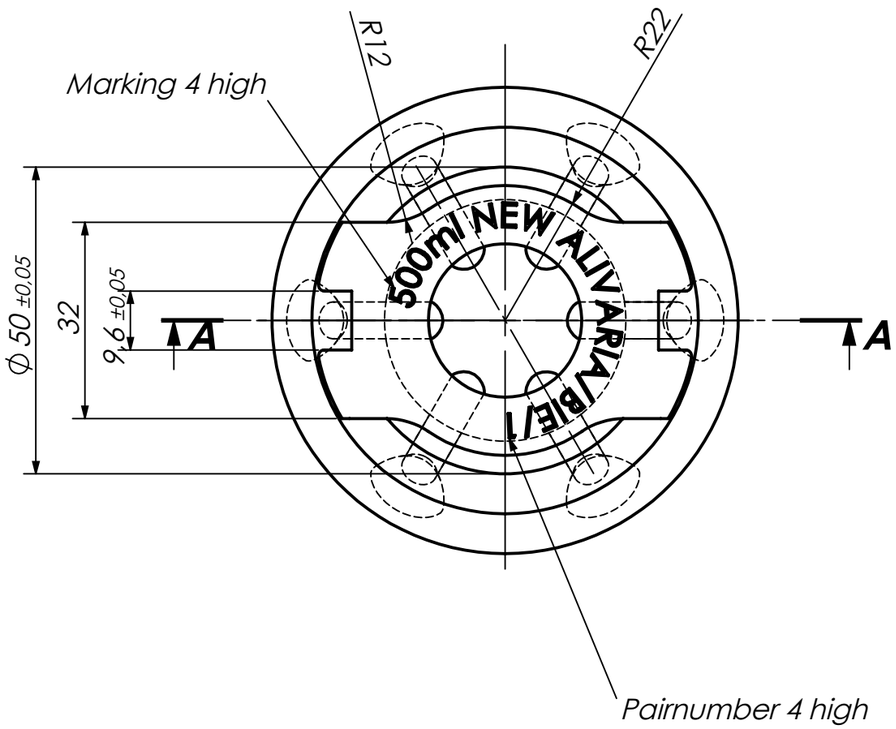

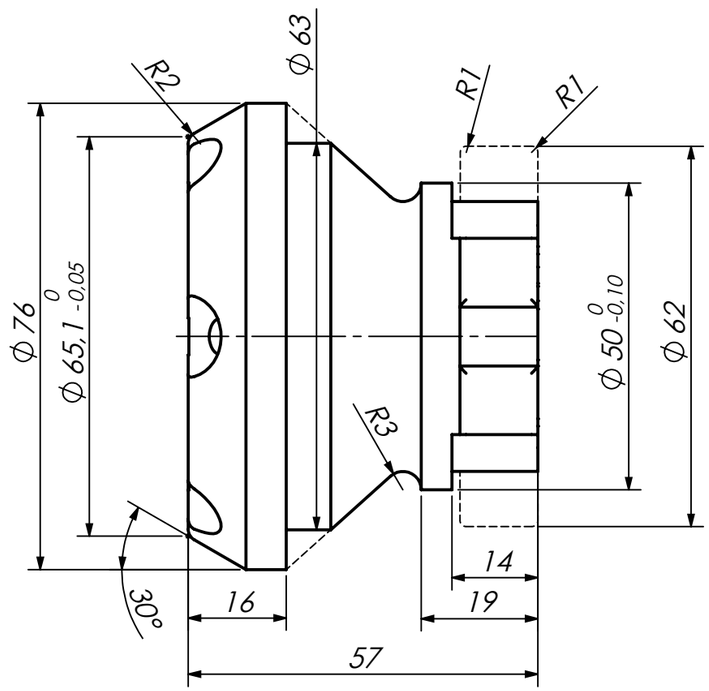

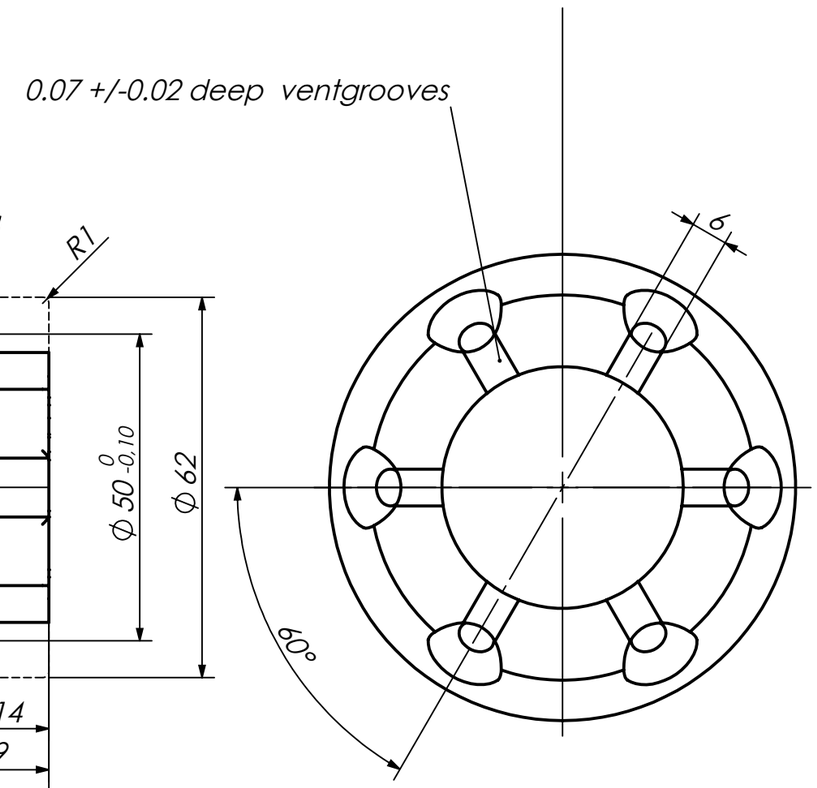

Hard weld match 2.5 wide 2 deep

INVERT CENTRE : -
'H' DIMENSION : -
ASSEMBLY : -
SCALE : 1:1

BIEBOUW BVBA
INDUSTRIESTRAAT 17
B-8755 Ruiselede

Tel.:+32(0)51 686714
Fax.:+32(0)51 689182
Email: info@biebouw.com

DO NOT SCALE DRAWING
IF IN DOUBT ASK

TOLERANCES UNLESS OTHERWISE SPECIFIED
DIMS: 0.0 ± 0.2 DIMS: 0.00 ± 0.05
REMOVE BURRS & SHARP EDGES IN
ACCORDANCE TO STANDARD PRACTICE

THIRD ANGLE PROJECTION

SURFACE FINISH
CAST: ROUGH: FINE: POLISH:

JOB NAME	500ml NEW ALIVARIA		
ITEM	BAFFLE	QUANTITY	32
CUSTOMER	BELSTEKLO	REF. NO.	
ORDER NO.	201770117	DRAWN BY	
MATERIAL	CI	CHECKED BY	
MACHINE	Heye 5" BB DG	DATE	24-5-2017

REVISIONS

DRG No:BIEB702-14