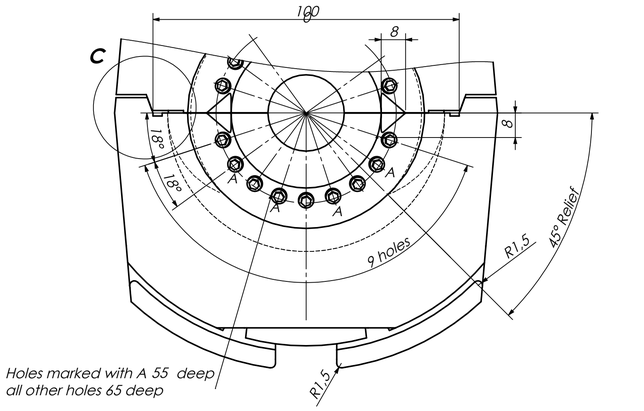

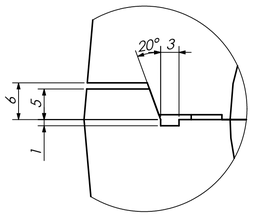

C (2 : 1)

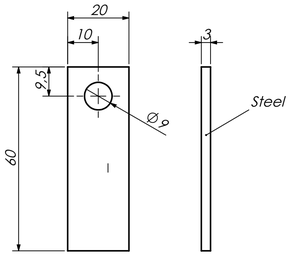

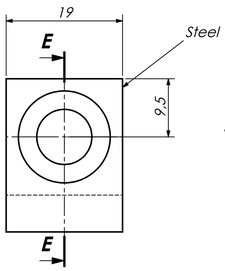

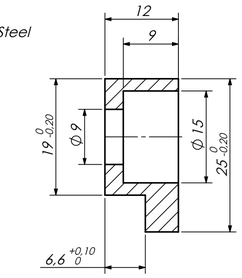

E-E (2 : 1)

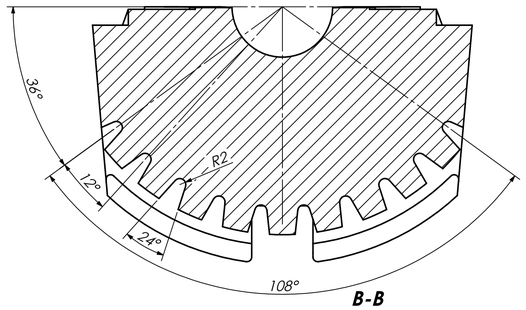

B-B

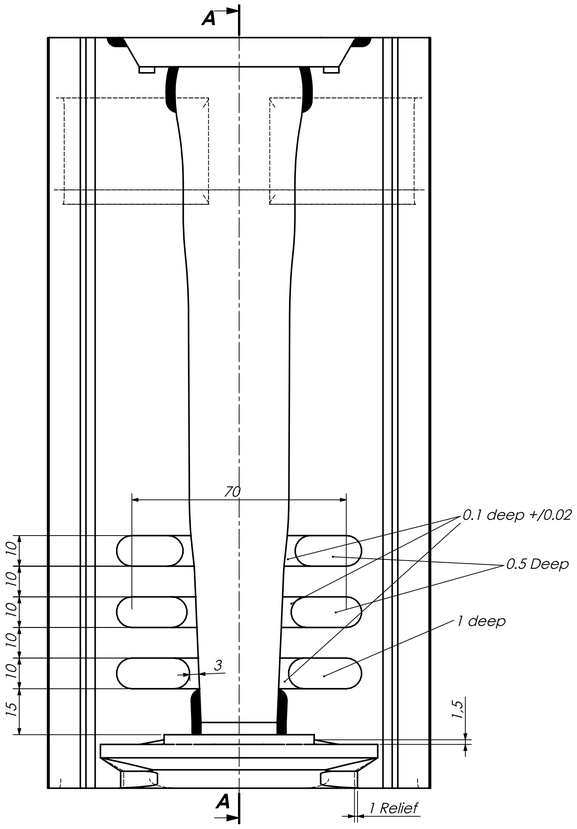

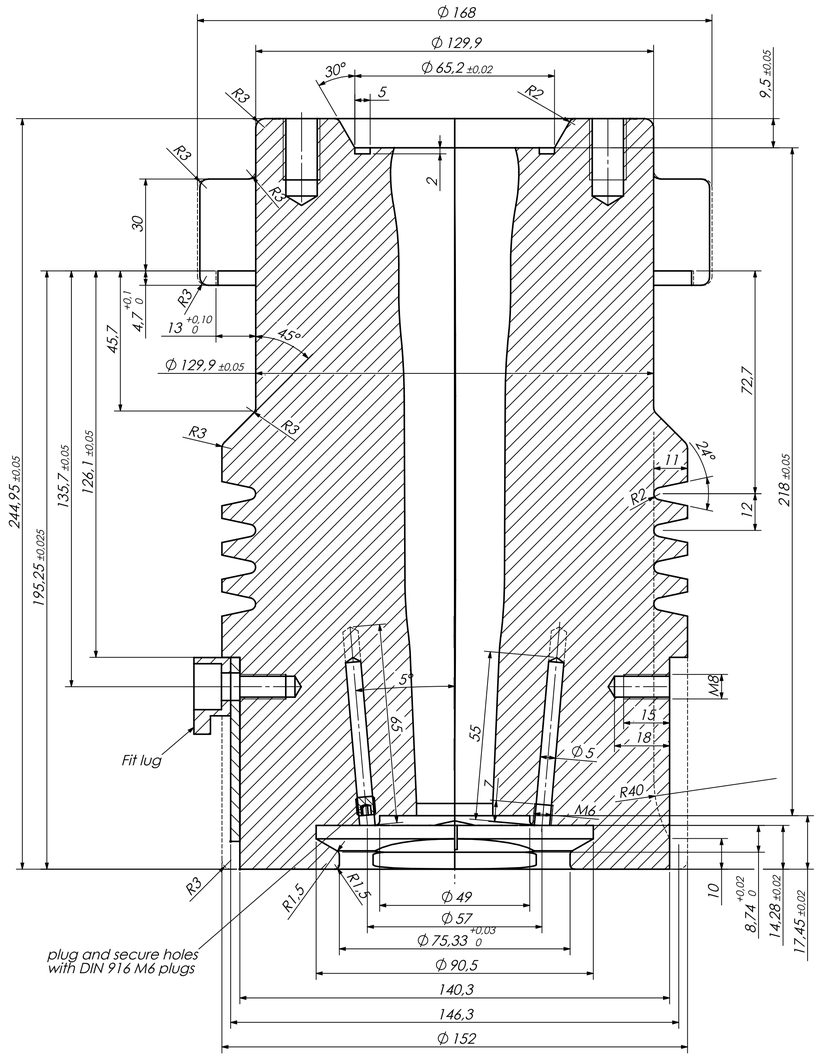

A-A

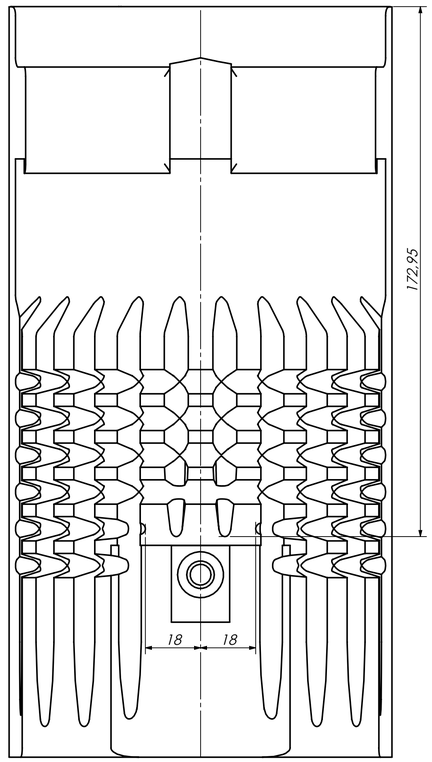

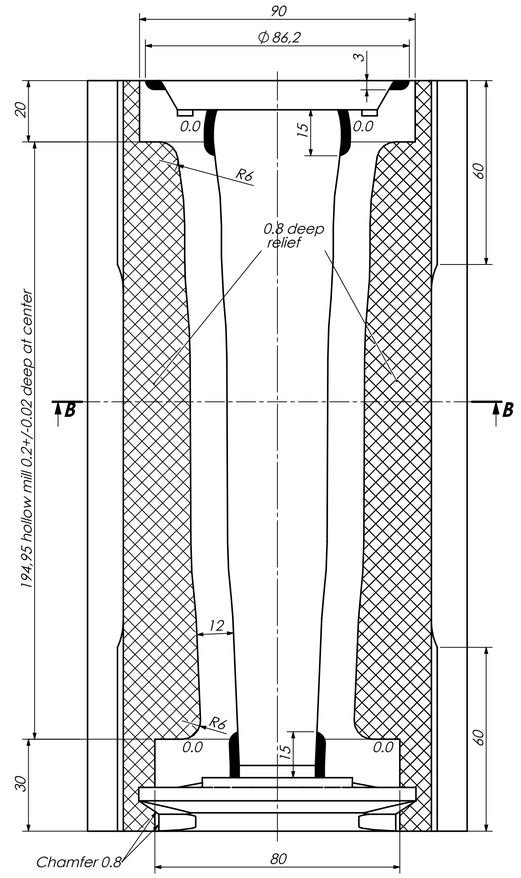

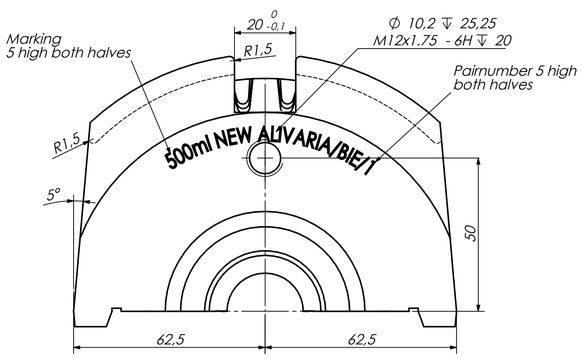

hard weld match and neck 3x3
hard weld partly joint 1.2 deep 3 wide
mould cavity see drawing BIEB702-13

Half & half tolerance 0.05

INVERT CENTRE : 85.7
'H' DIMENSION : 92.1
ASSEMBLY : 2101200097
SCALE : 1:1

BIEBOUW BVBA
INDUSTRIESTRAAT 17
B-8755 Ruiselede

Tel.:+32(0)51 686714
Fax.:+32(0)51 689182
Email: info@biebouw.com

DO NOT SCALE DRAWING IF IN DOUBT ASK

TOLERANCES UNLESS OTHERWISE SPECIFIED DIMS: 0.0 ± 0.2 DIMS: 0.00 ± 0.05 REMOVE BURRS & SHARP EDGES IN ACCORDANCE TO STANDARD PRACTICE

THIRD ANGLE PROJECTION

SURFACE FINISH CAST: ROUGH FINE: POLISH

JOB NAME	500ml NEW ALIVARIA		
ITEM	BLANKMOULD	QUANTITY	32
CUSTOMER	BELSTEKLO	REF. NO.	
ORDER NO.	201770117	DRAWN BY	JBB
MATERIAL	Cast iron Q3	CHECKED BY	
MACHINE	Heye 5" BB DG	DATE	29-5-2017

REVISIONS

DRG No: BIEB702-12