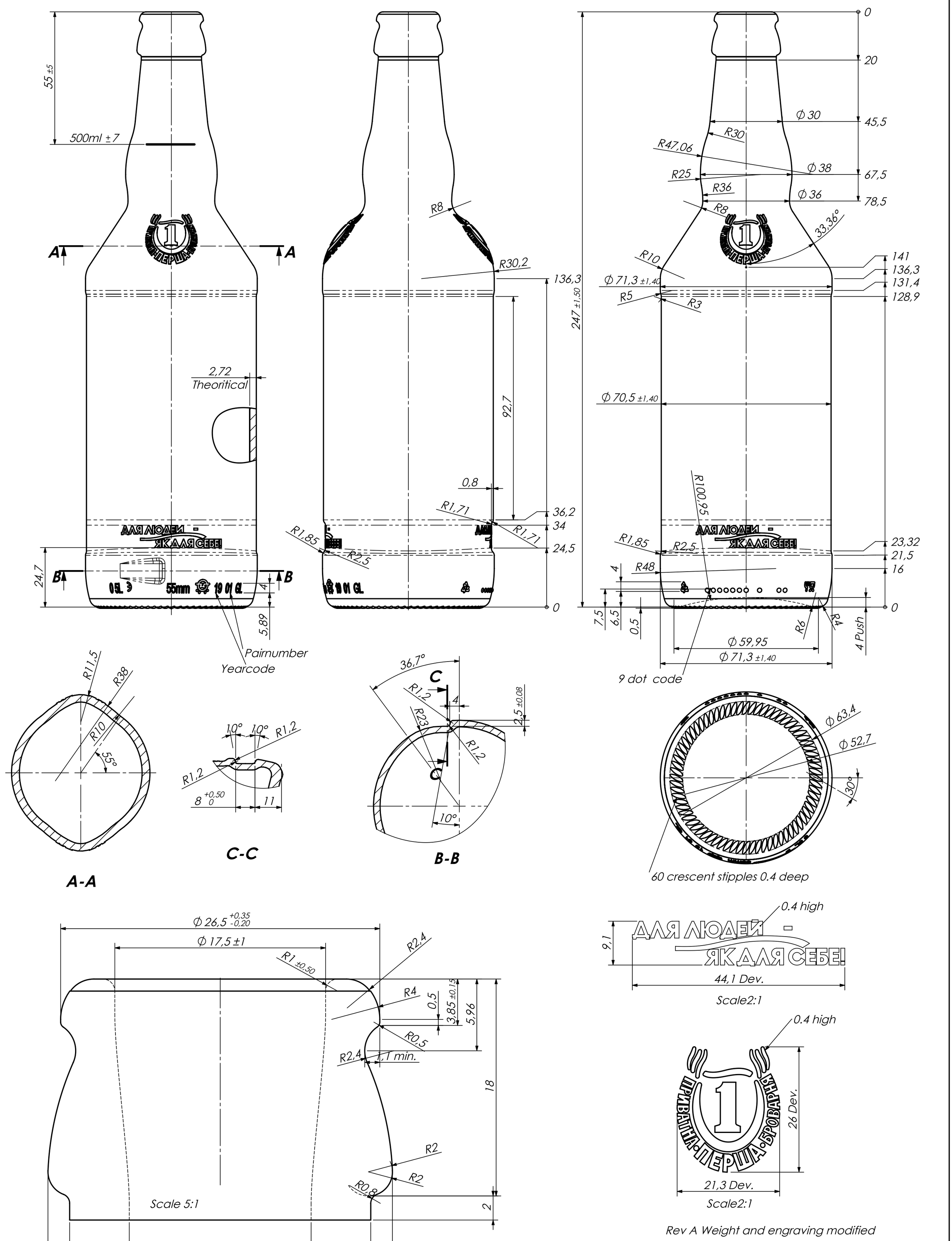

Rev A Weight and engraving modified

BIEBOUW B.V.BA.
INDUSTRIESTRAAT 17
B-8755 Ruiselede
Belgium

Tel.:+32(0)51 686714
Fax.: +32(0)51 689182
Email:info@biebouw.com

JOB NAME	500ml YAK DA SEBE		
CUSTOMER	BELSTEKLOPROM		
FILLING	500ml +/-7	PROCESS	Heye 5" BB DG
BRIMFULL	520ml +/-7	DRAWN BY	JBB
WEIGHT	345gr +10/-5	CHECKED BY	-
FINISH	26-600	DATE	25-2-2019

DRG. NO. BIEB825-01 A