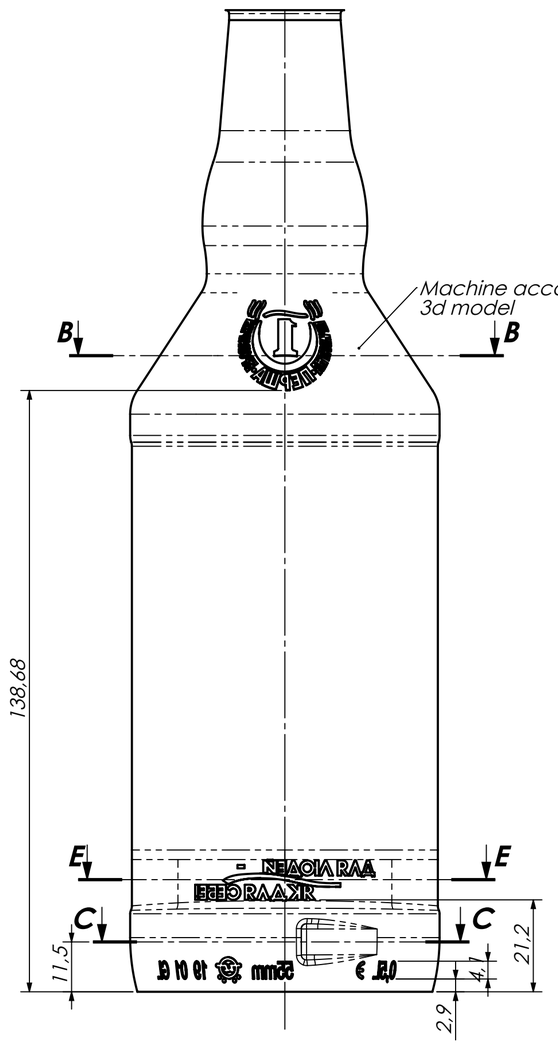

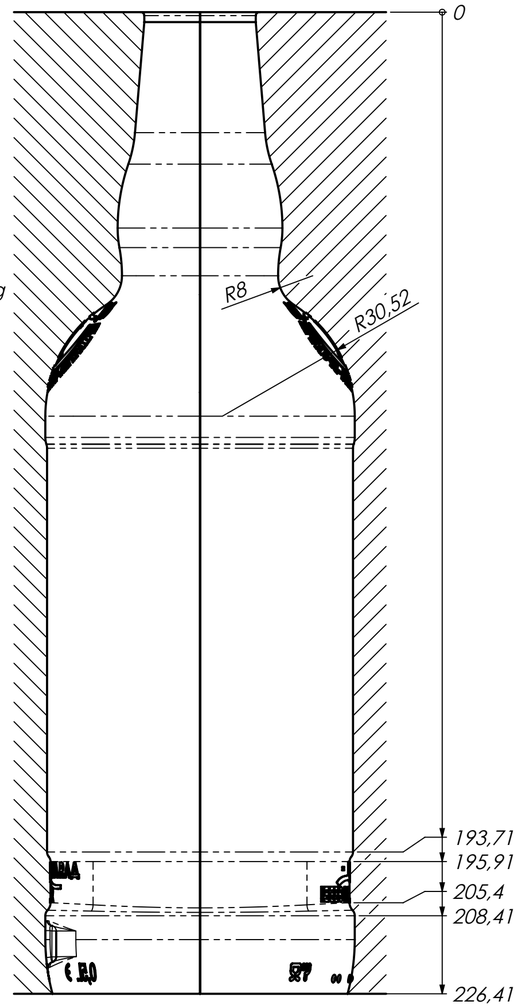

A-A

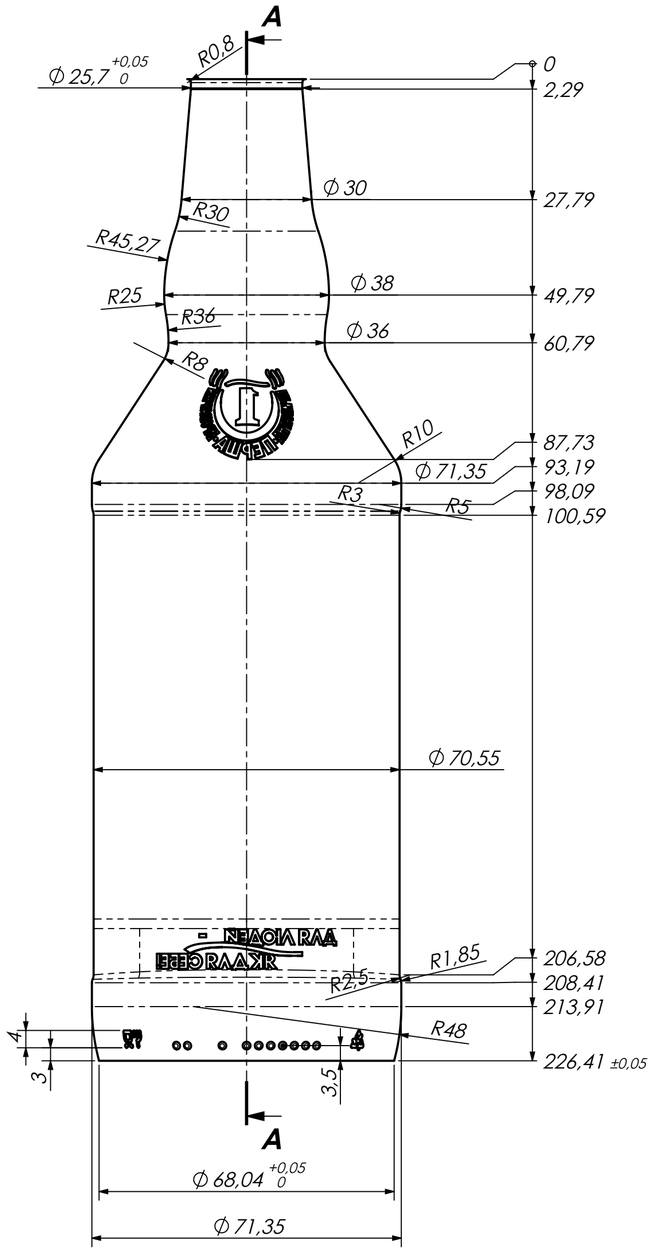

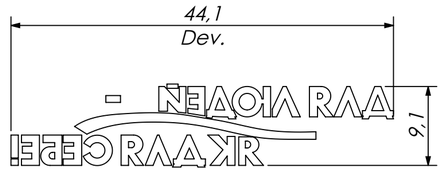

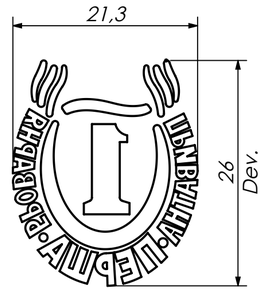

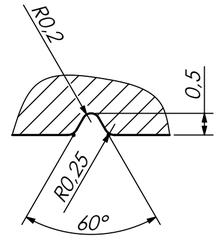

Body & shoulder Engraving
profile 10:1

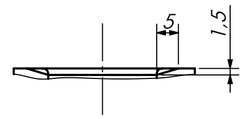

Neckrelief both halves

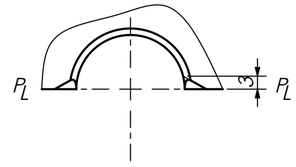

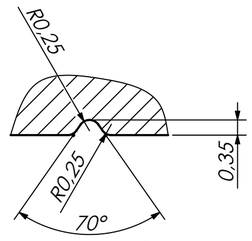

Heel Engraving
profile 10:1

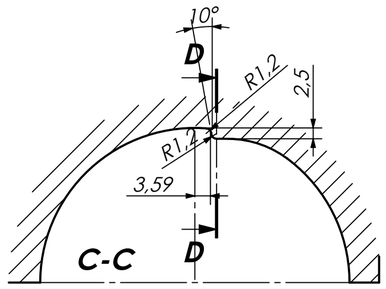

C-C

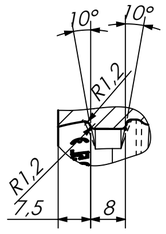

D-D

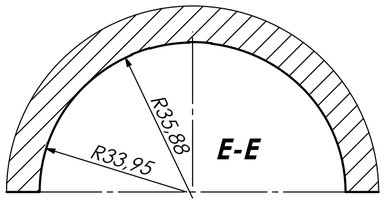

E-E

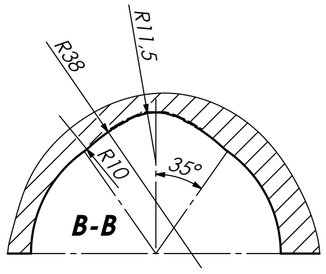

B-B

Volume mould+botto	656,83 ml	655,00 gr	+/−0,6
Volume mould	649,65 ml	647,84 gr	
Volume bottom	7,18 ml		

1,0028 Conversion factor gr ml

INVERT CENTRE :
'H' DIMENSION :
ASSEMBLY :
SCALE : 1:1

BIEBOUW BVBA
INDUSTRIESTRAAT 17
B-8755 Ruiselede

Tel.:+32(0)51 686714
Fax.:+32(0)51 689182
Email: info@biebouw.com

DO NOT SCALE DRAWING
IF IN DOUBT ASK

TOLERANCES UNLESS OTHERWISE SPECIFIED
DIMS: 0.0 ± 0.2 DIMS: 0.00 ± 0.05
REMOVE BURRS & SHARP EDGES IN
ACCORDANCE TO STANDARD PRACTICE

THIRD ANGLE PROJECTION

SURFACE FINISH
CAST: ROUGH: FINE: POLISH:

JOB NAME	500ml YAK DA SEBE		
ITEM	BLOW MOULD CAVITY	QUANTITY	28
CUSTOMER	BELSTEKLOPROM	REF. NO.	
ORDER NO.	20190058	DRAWN BY	JBB
MATERIAL		CHECKED BY	
MACHINE	Heye 5" BB DG	DATE	25-2-2019

REVISIONS

DRG No: BIEB825-07