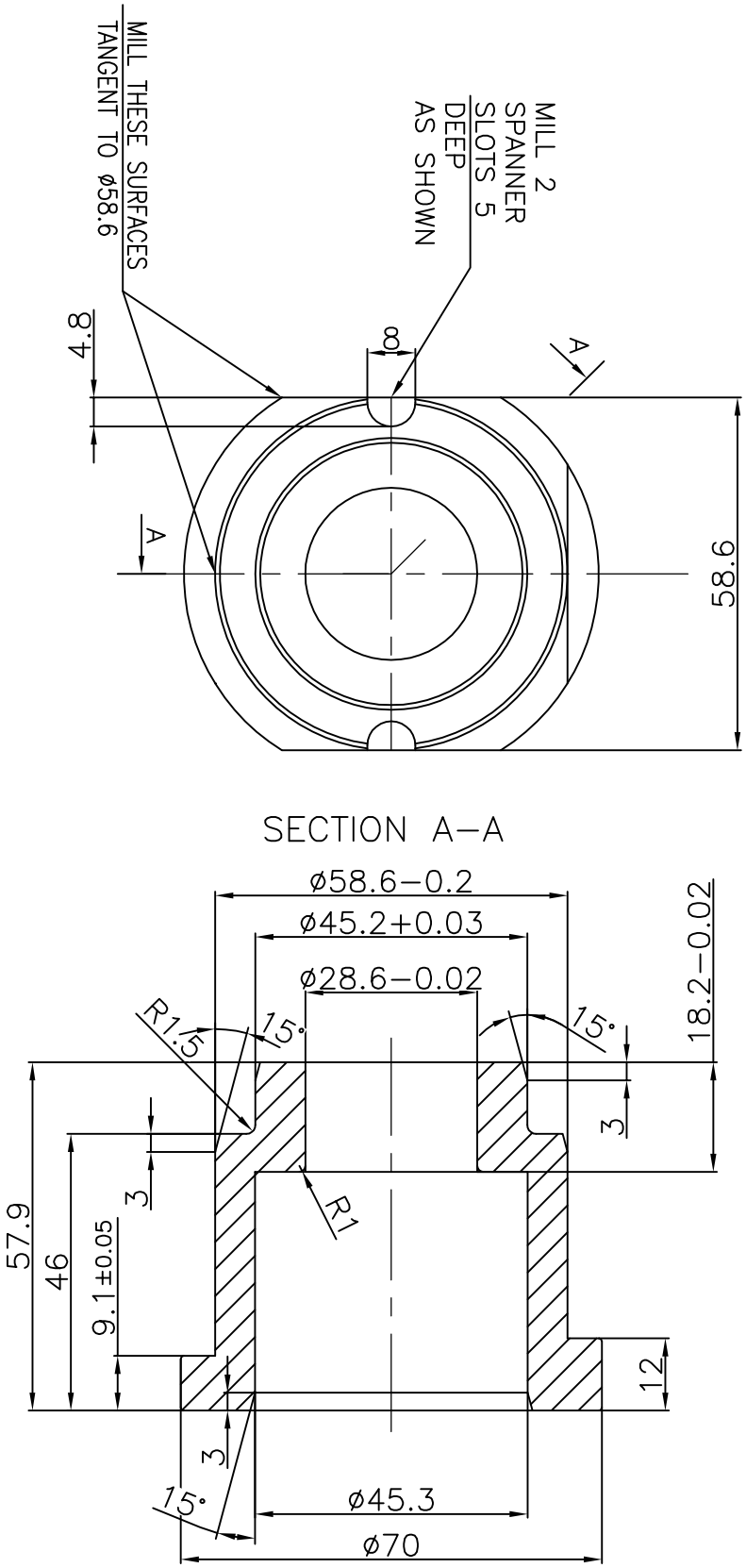

ENGRAVE: IVAN KUPALA 500
MOULD NO.

IVAN KUPALA 500 THIMBLE		
SCALE 1:1	DRAWING NO. IVAN KUPALA 500 –TH–A2	
DRAW	CHECKED	APPROVED
22/12/2017		
MATERIAL	CAST IRON	
QUANTITY		