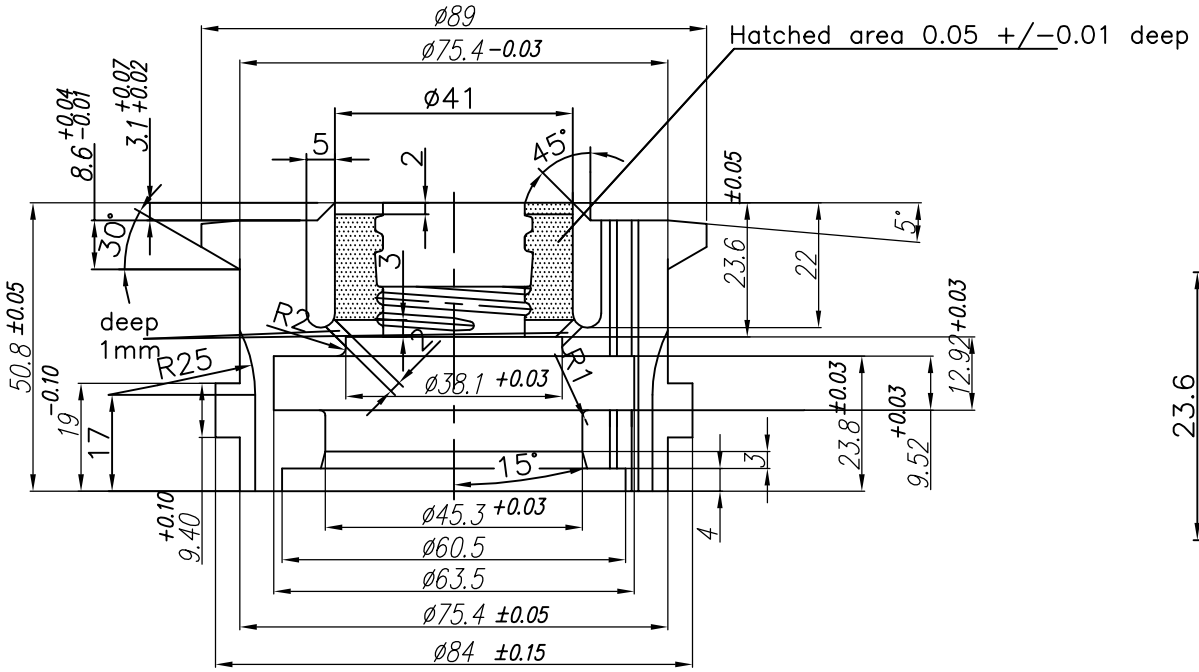

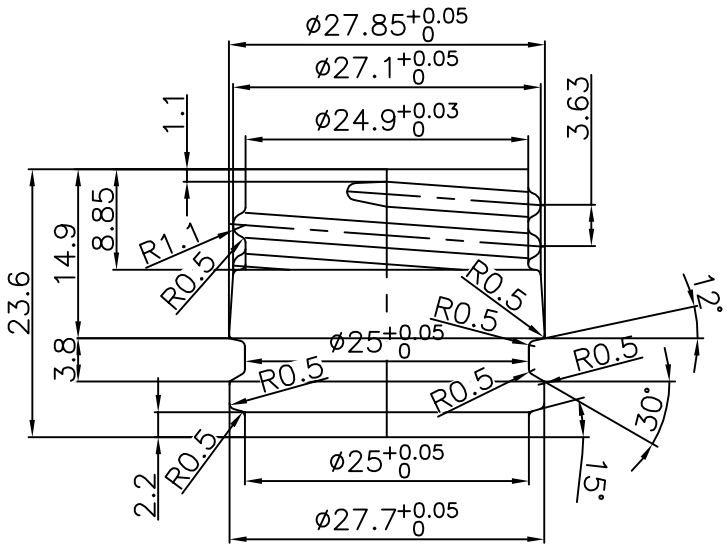

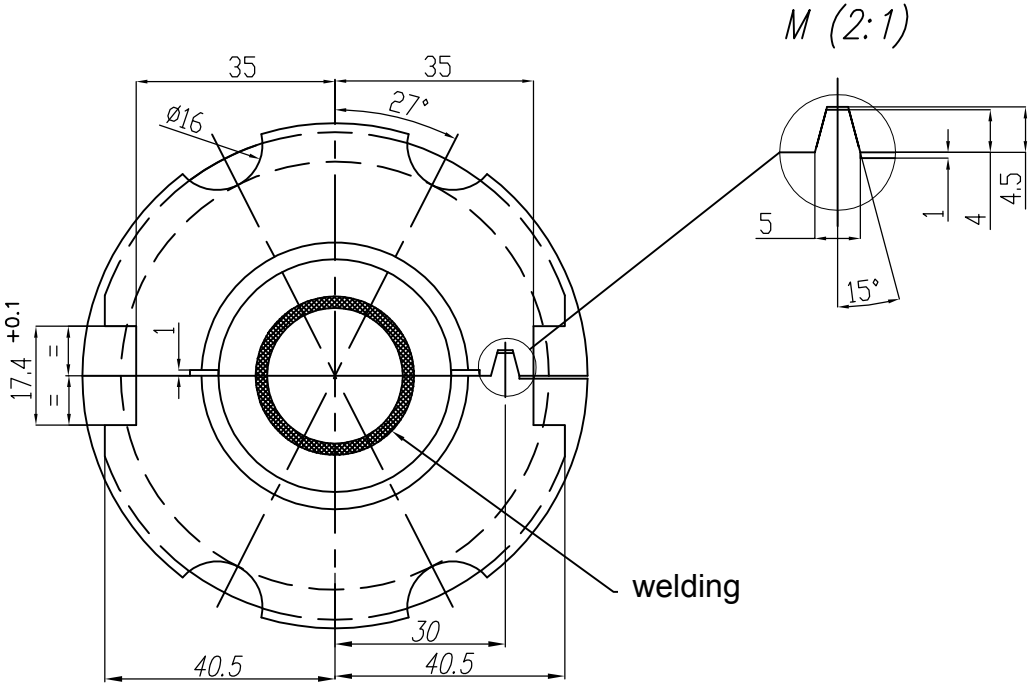

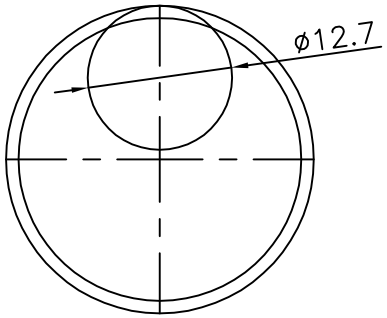

Mark: Aquad XXI-V-28-2-350
Mark: PSI/4468
Mark ordinal number
Depth of marking - 0.2-0.3mm

Material: Bronze (GS889)
Welding: Cavity (HRC 35...40)

Drawing number: 4468-NR-1