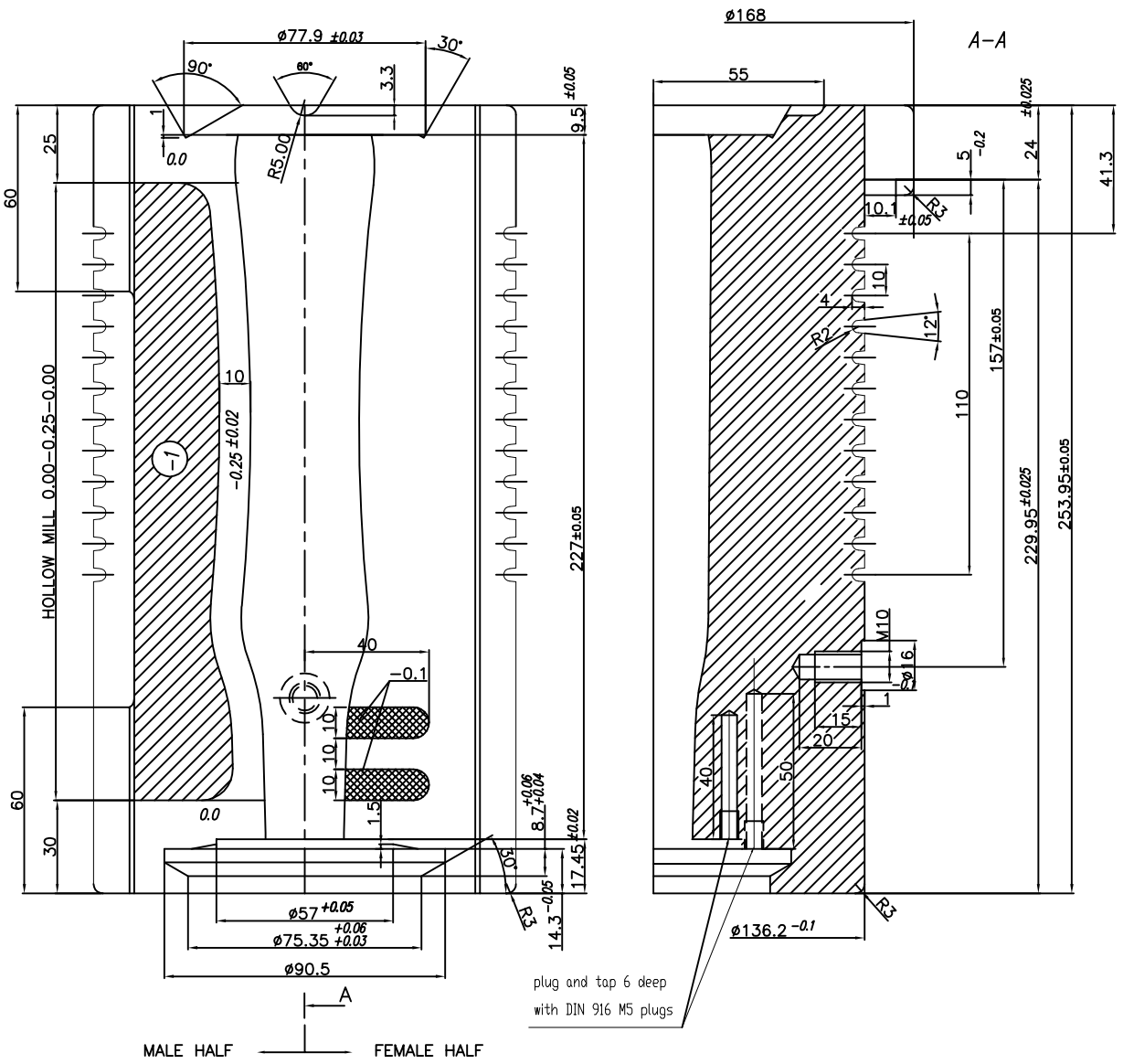

ENGRAVE: KEPIL 500
MOULD NO.

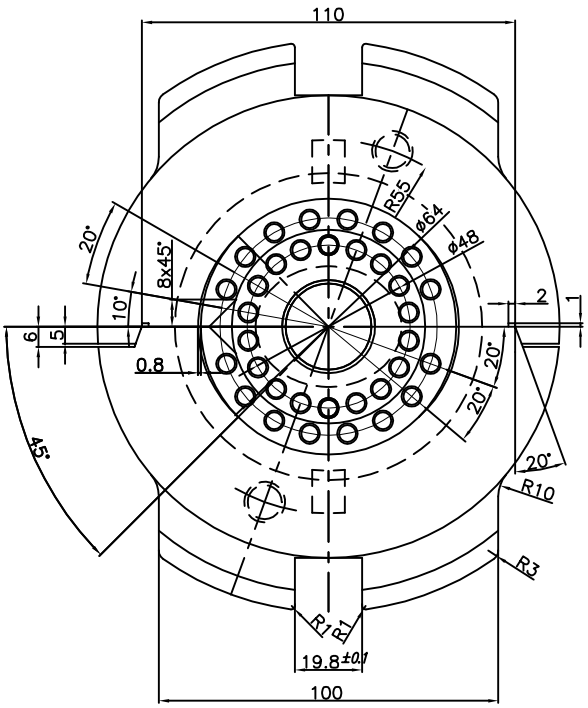

BOTTOM VIEW

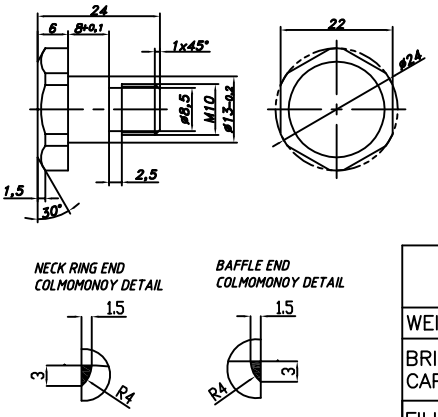

KEPIL 500 BLANK MOULD			
WEIGHT	405±10g		
BRIMFUL CAPACITY	520±10ml		
FILL POINT CAPACITY	500±10ml		
SCALE 1:1	DRAWING NO. KEPIL 500 –BM–A2		
	DRAW	CHECKED	APPROVED
MACHINE TYPE	BOTTERO DG 5½"	25/10/2017	
HOLDER SIZE	#23		
INVERT	95	MATERIAL	CAST IRON
"H" DIM.	117.5	QUANTITY	