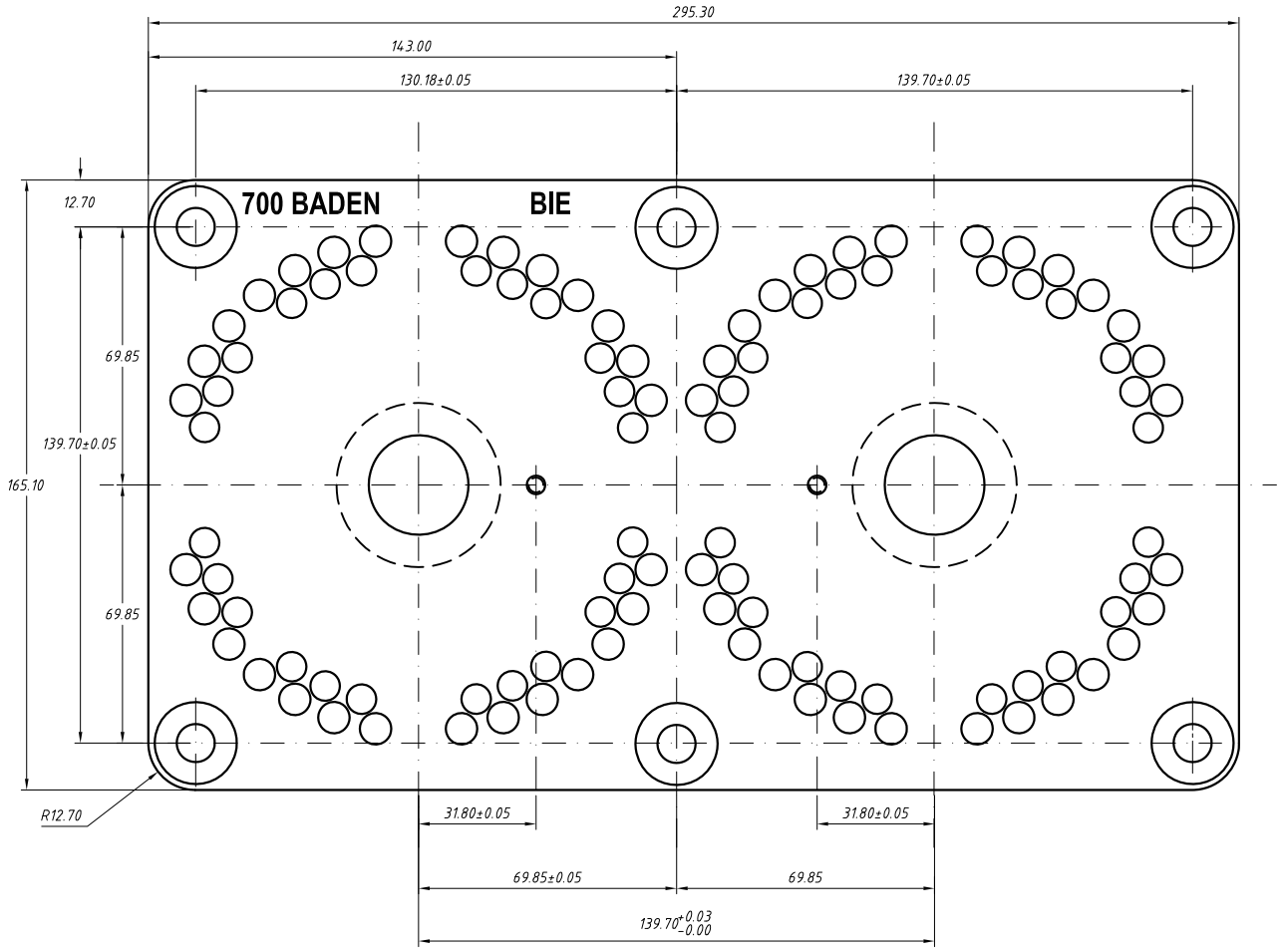

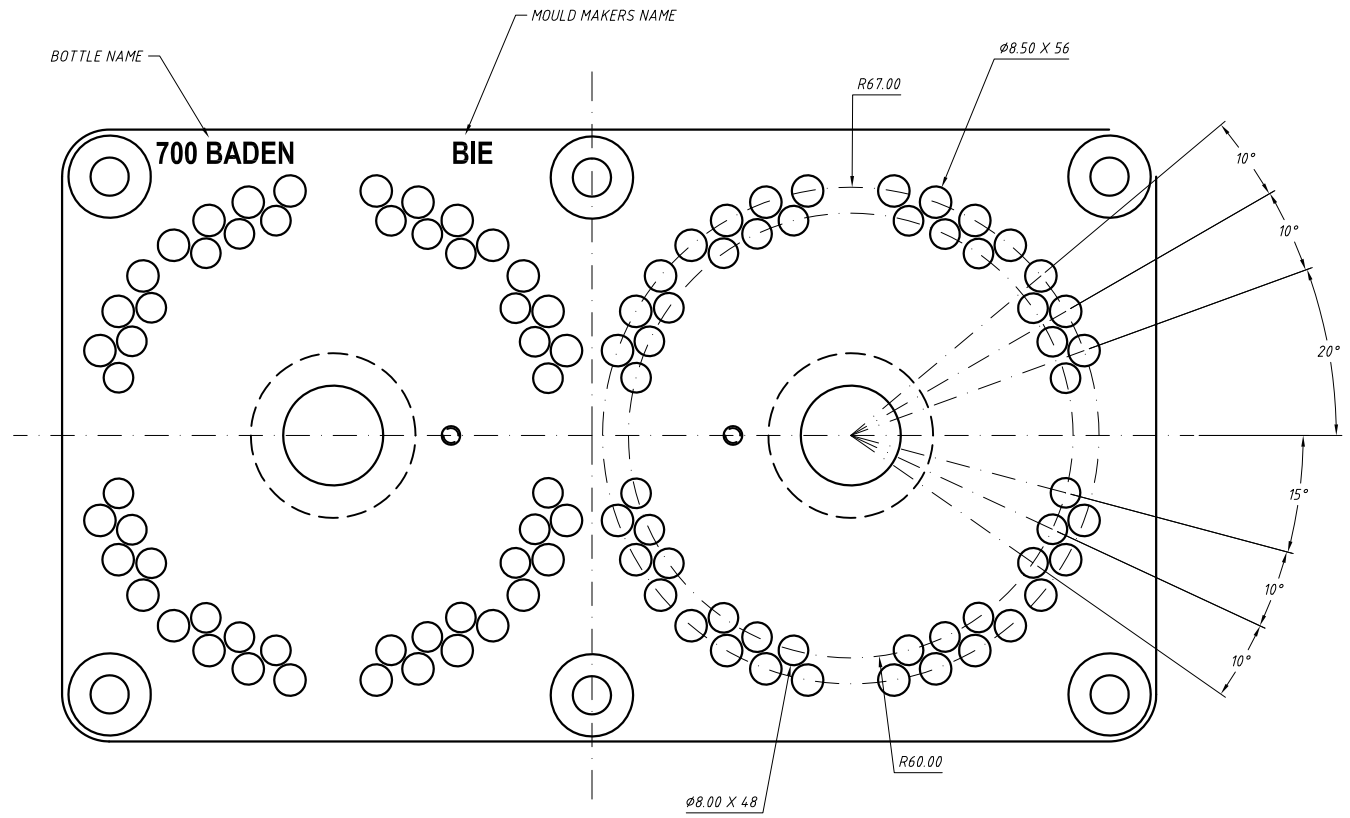

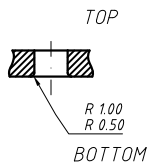

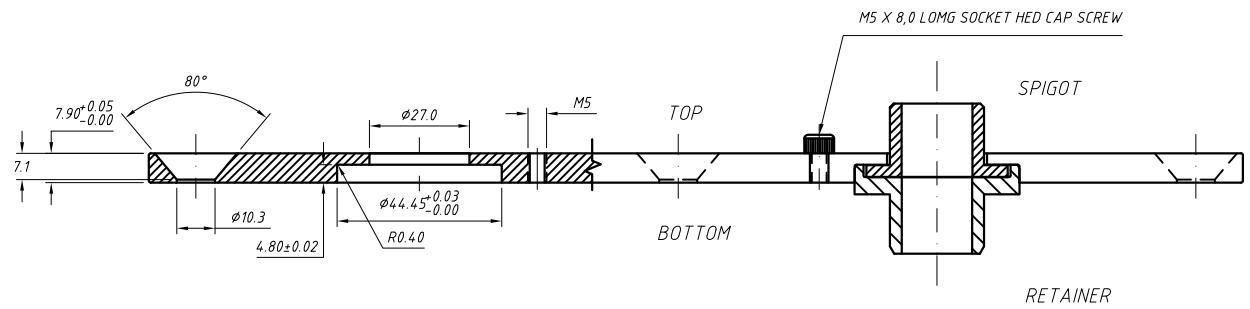

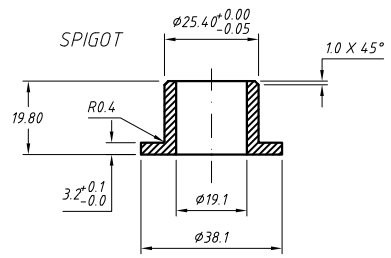

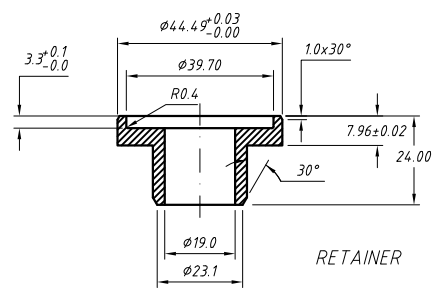

© BIEBOUW B.V.B.A.
Industriestraat 17
B-8755 Ruiselede
Belgium
Tel.: +32 (0)51 686714
Fax.: +32 (0)51 689182
Email: info@biebouw.com

DO NOT SCALE DRAWING IF IN DOUBT ASK

TOLERANCES UNLESS OTHERWISE SPECIFIED DIMS: 0.0 ± 0.2 DIMS: 0.00 ± 0.05
REMOVE BURRS & SHARP EDGES IN ACCORDANCE TO STANDARD PRACTICE

THIRD ANGLE PROJECTION

SURFACE FINISH
CAST: ROUGH: FINE: POLISH:

JOB NAME	700ml BADEN		
ITEM	VERTIFLOW PLATE	QUANTITY	
CUSTOMER	SYSTEMPACK	REF. NO.	
ORDER NO.	20120352	DRAWN BY	F.KARLSEN
MATERIAL	STEEL	CHECKED BY	
MACHINE	EM IS DG BB 5,5"	DATE	15.02.2012

REVISIONS

DRG. NO. FKE1895 - 41