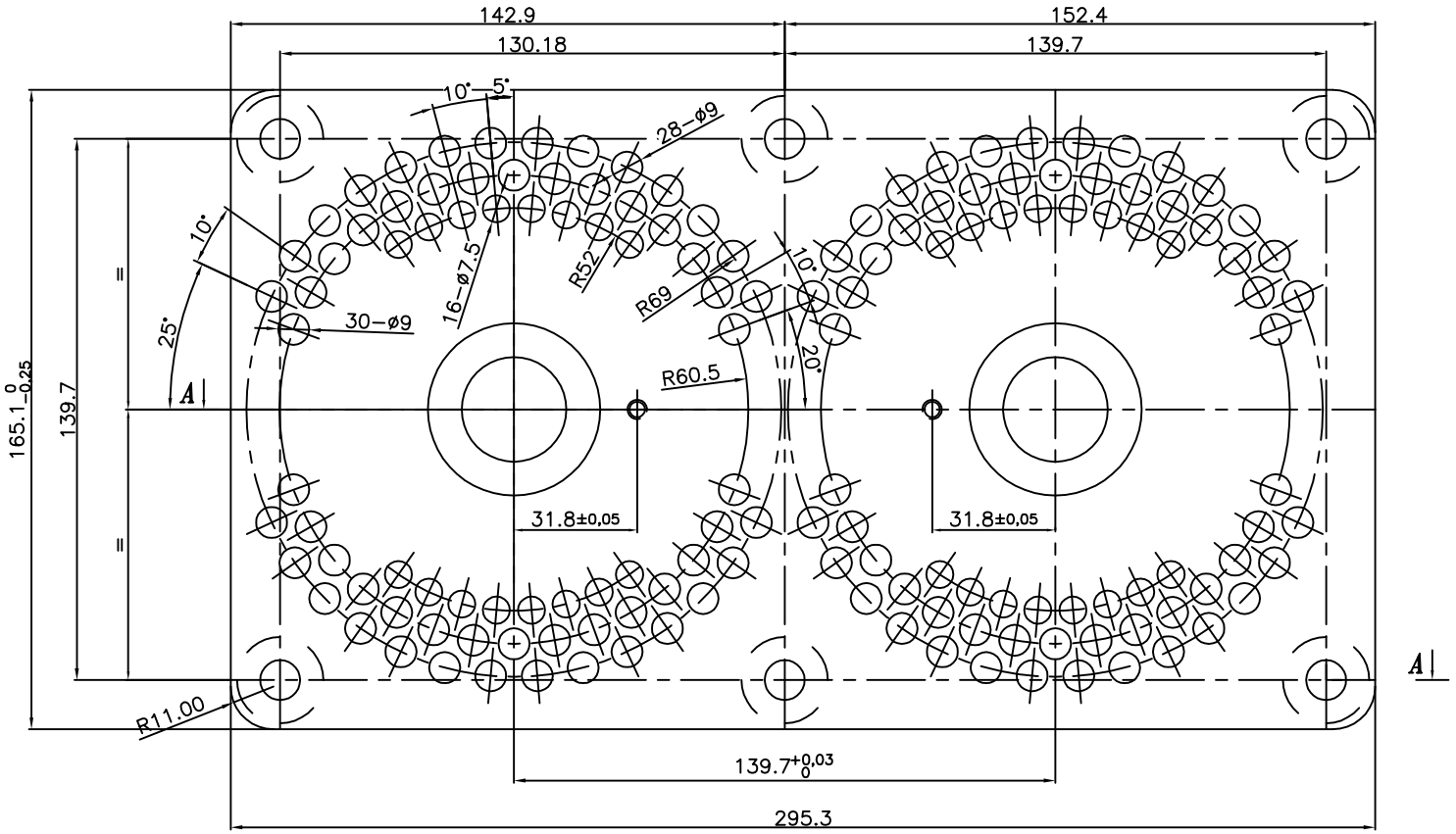

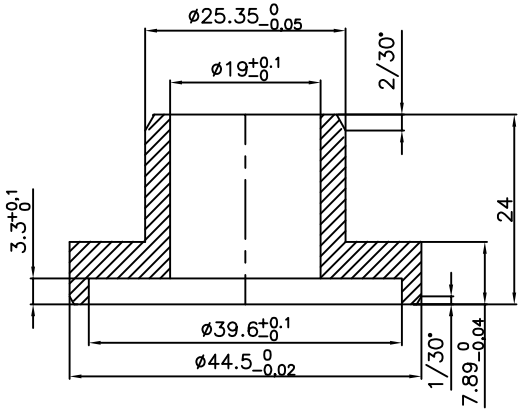

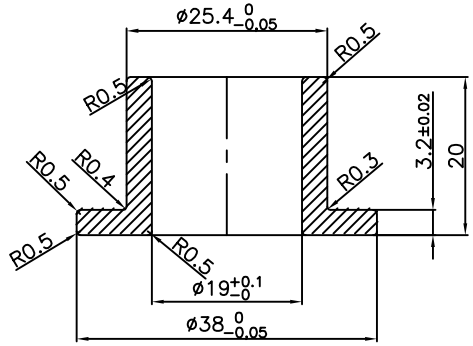

PRESJEK A−A

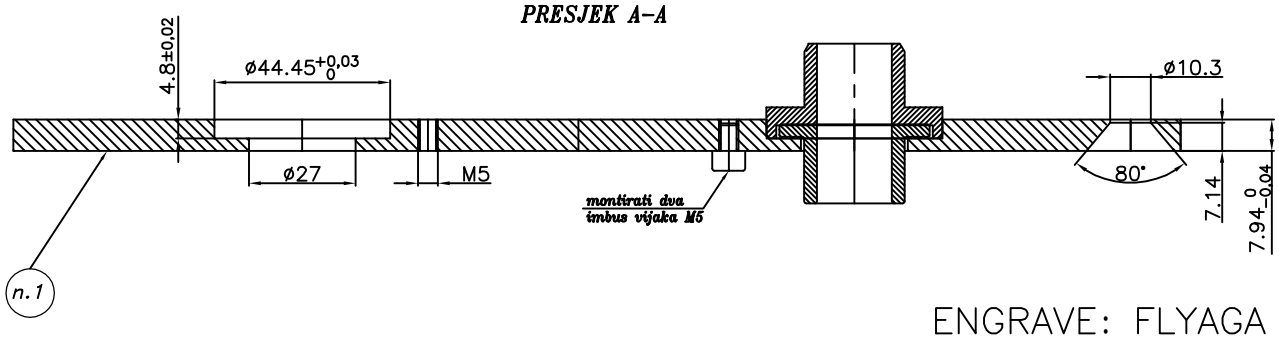

ENGRAVE: FLYAGA 500
MOULD NO.

FLYAGA 500 DISTRIBUTOR PLATE		
SCALE 1:1	DRAWING NO. FLYAGA 500 −DP−A5	
DRAW	CHECKED	APPROVED
10/11/2017		
MATERIAL	STEEL	
QUANTITY		