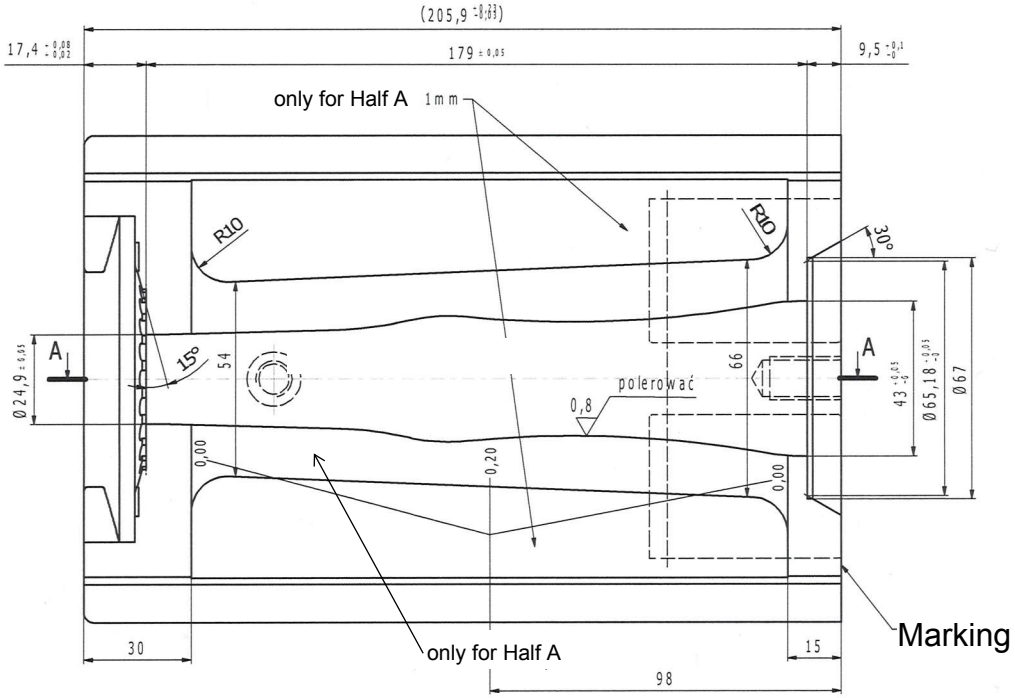

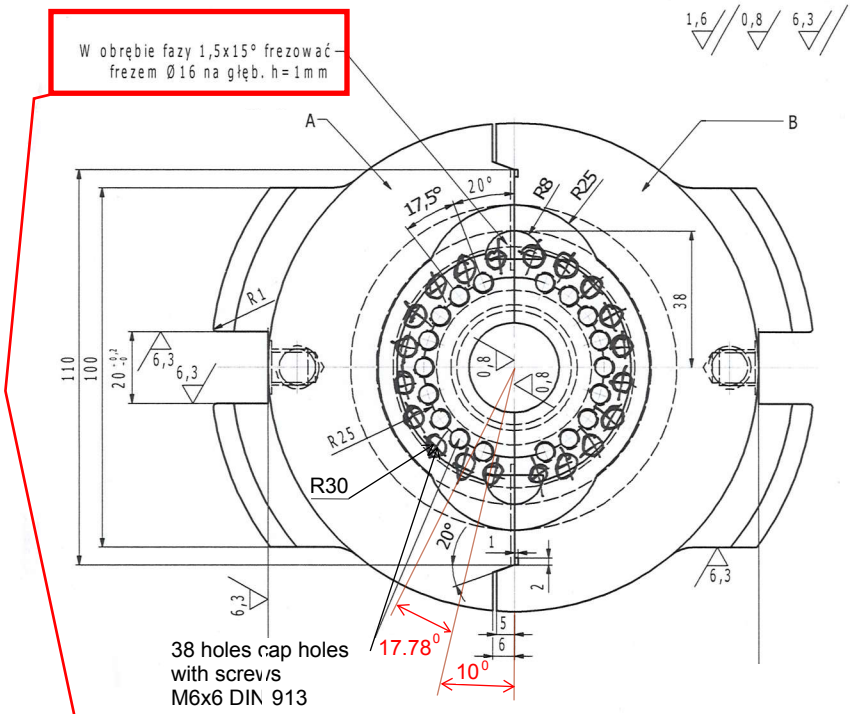

(1 : 2)

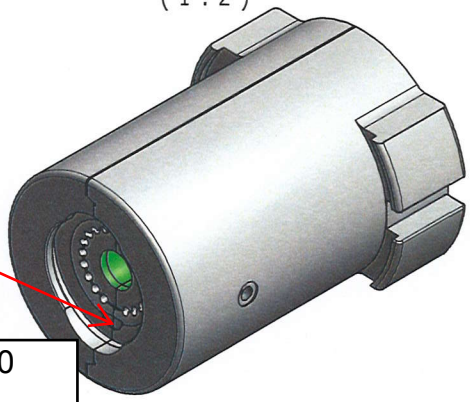

A-A

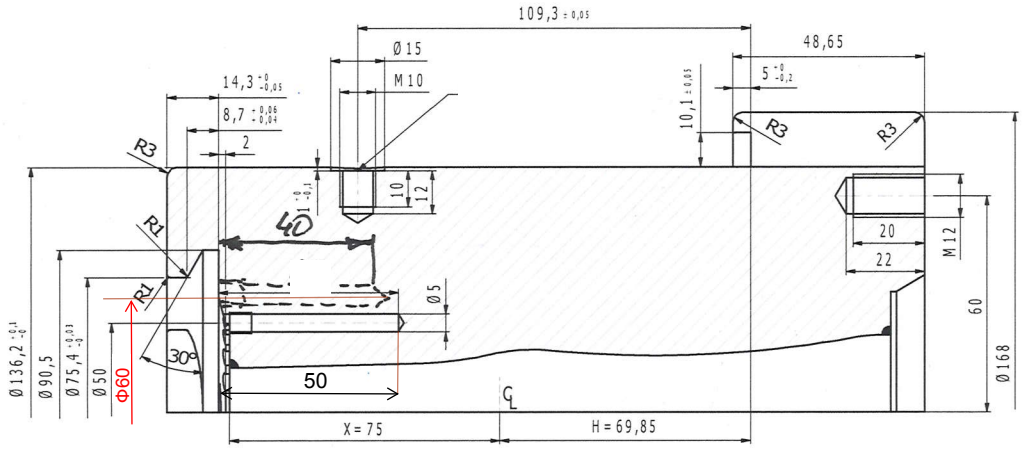

Mark: Aquad XXI-V-28-2-350
Mark: PSI/4468
Mark ordinal number
Depth of marking - 0.2-0.3mm

Material: Cast Iron (GS800)
Welding: neck and base (HRC 35...40)

Drawing number: 4468-BLK1-1