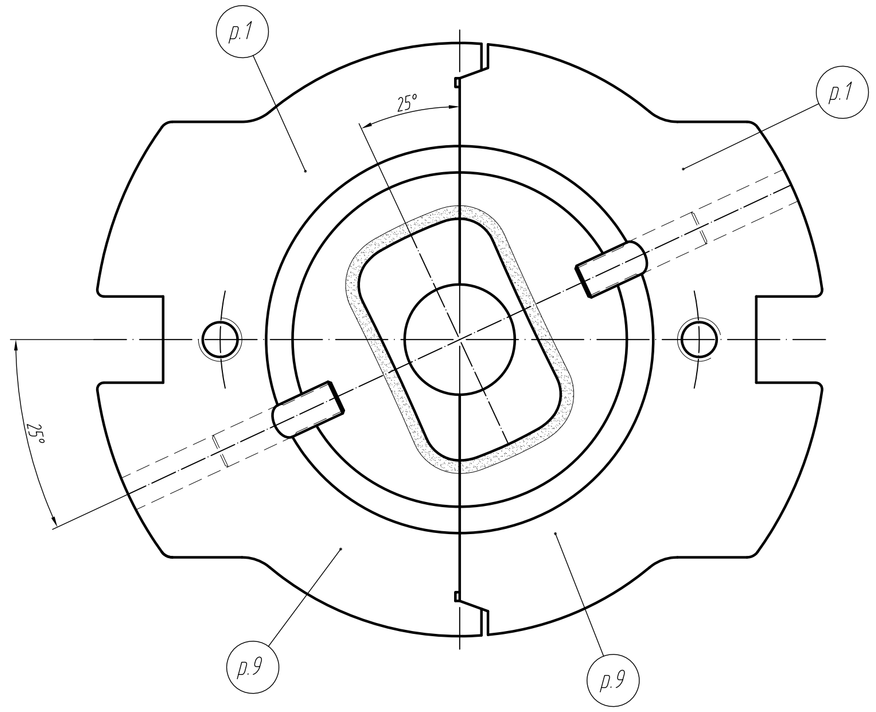


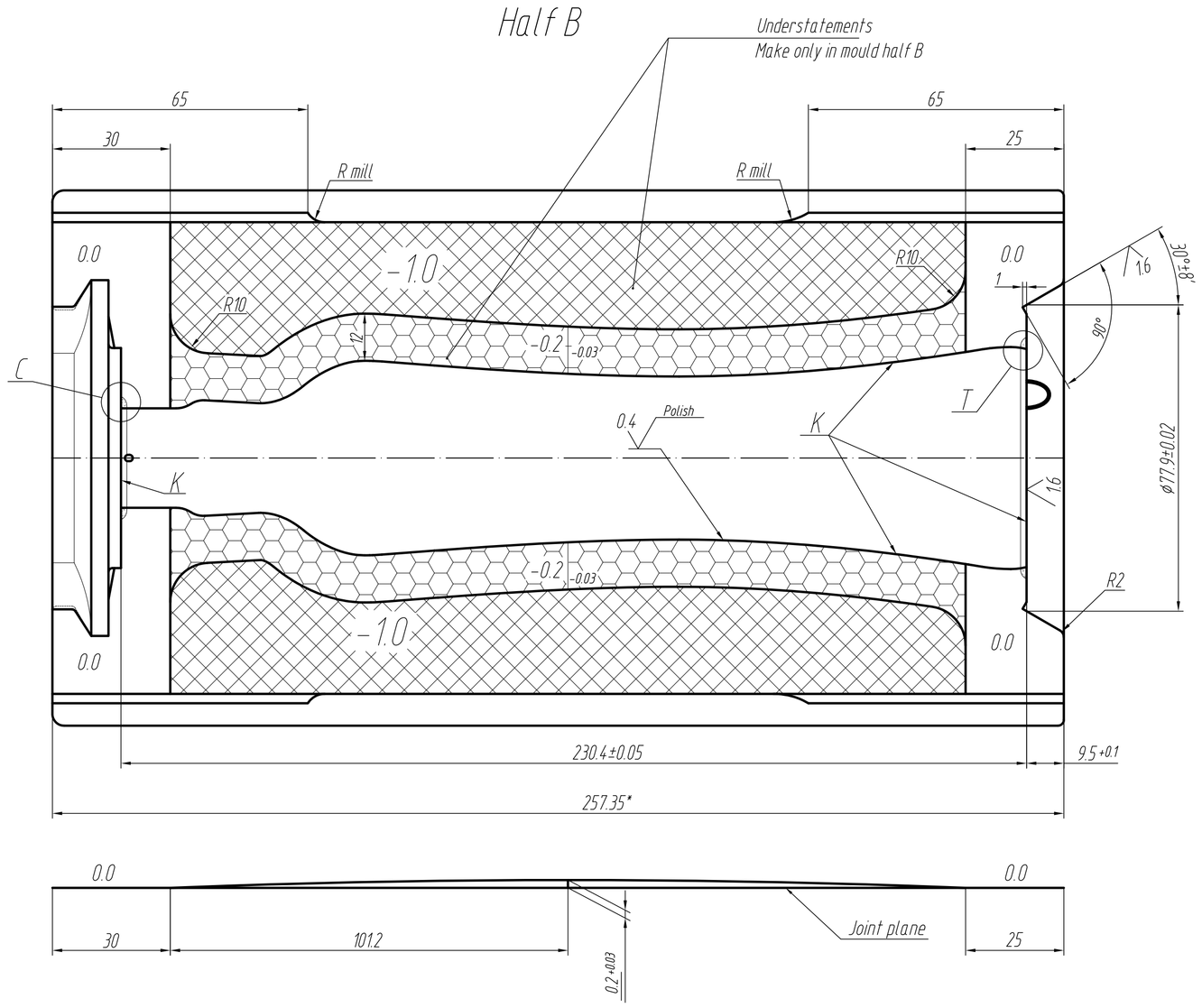


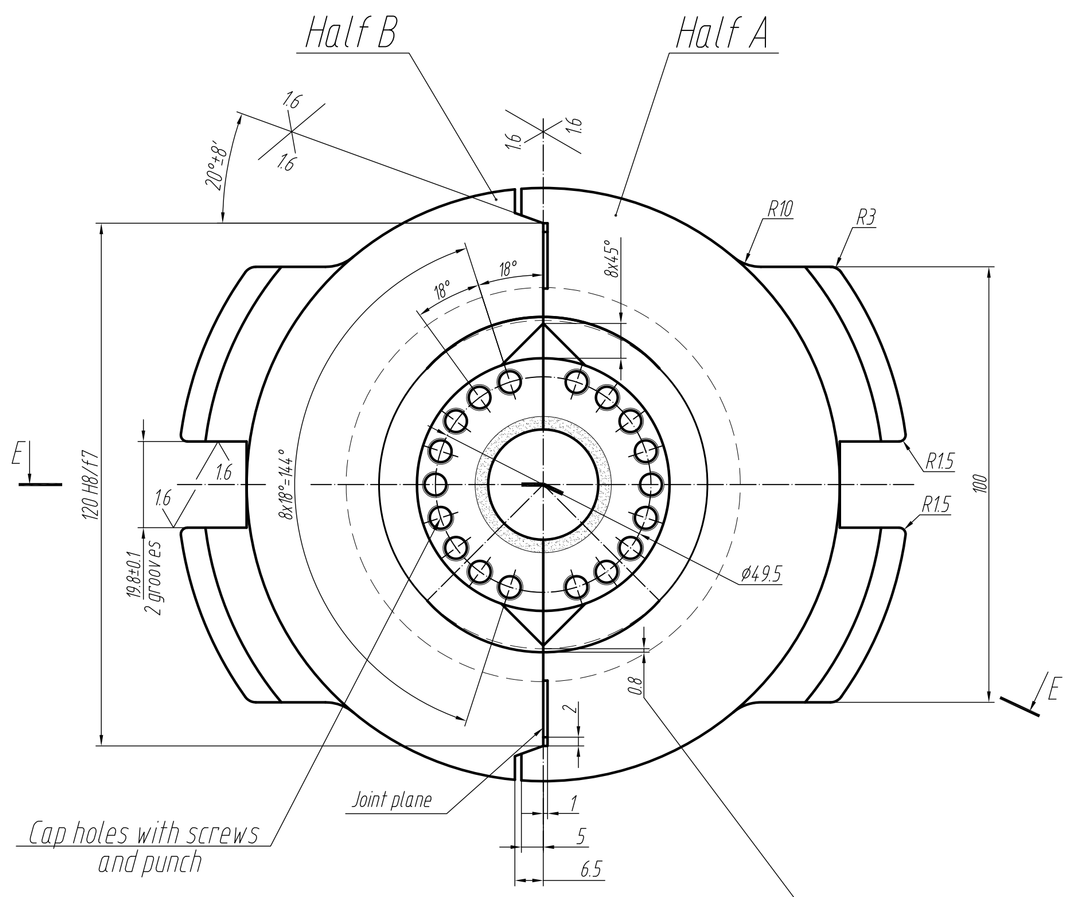


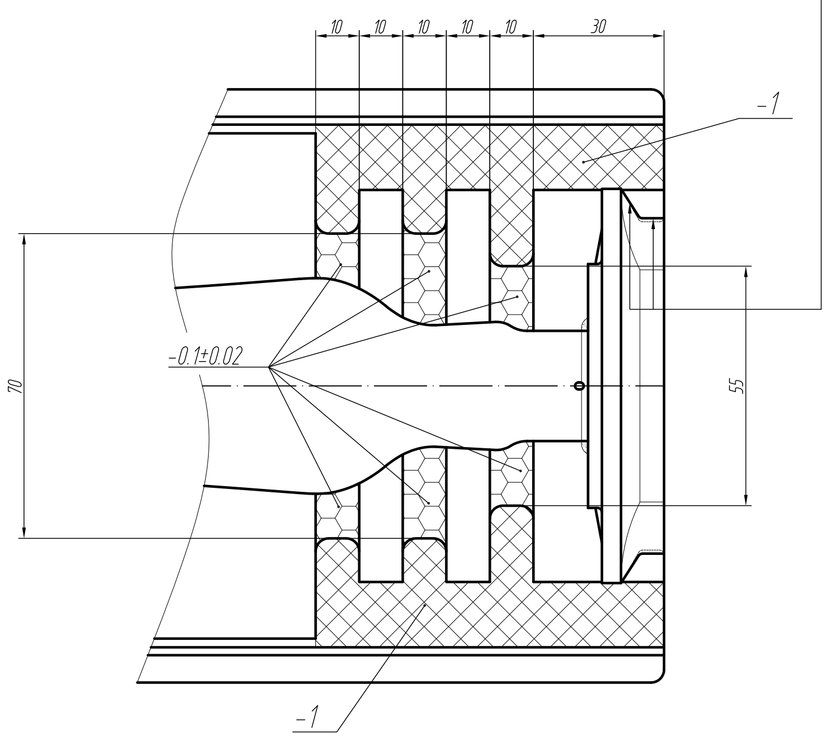


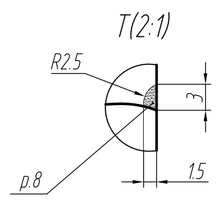


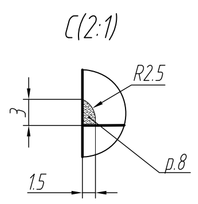


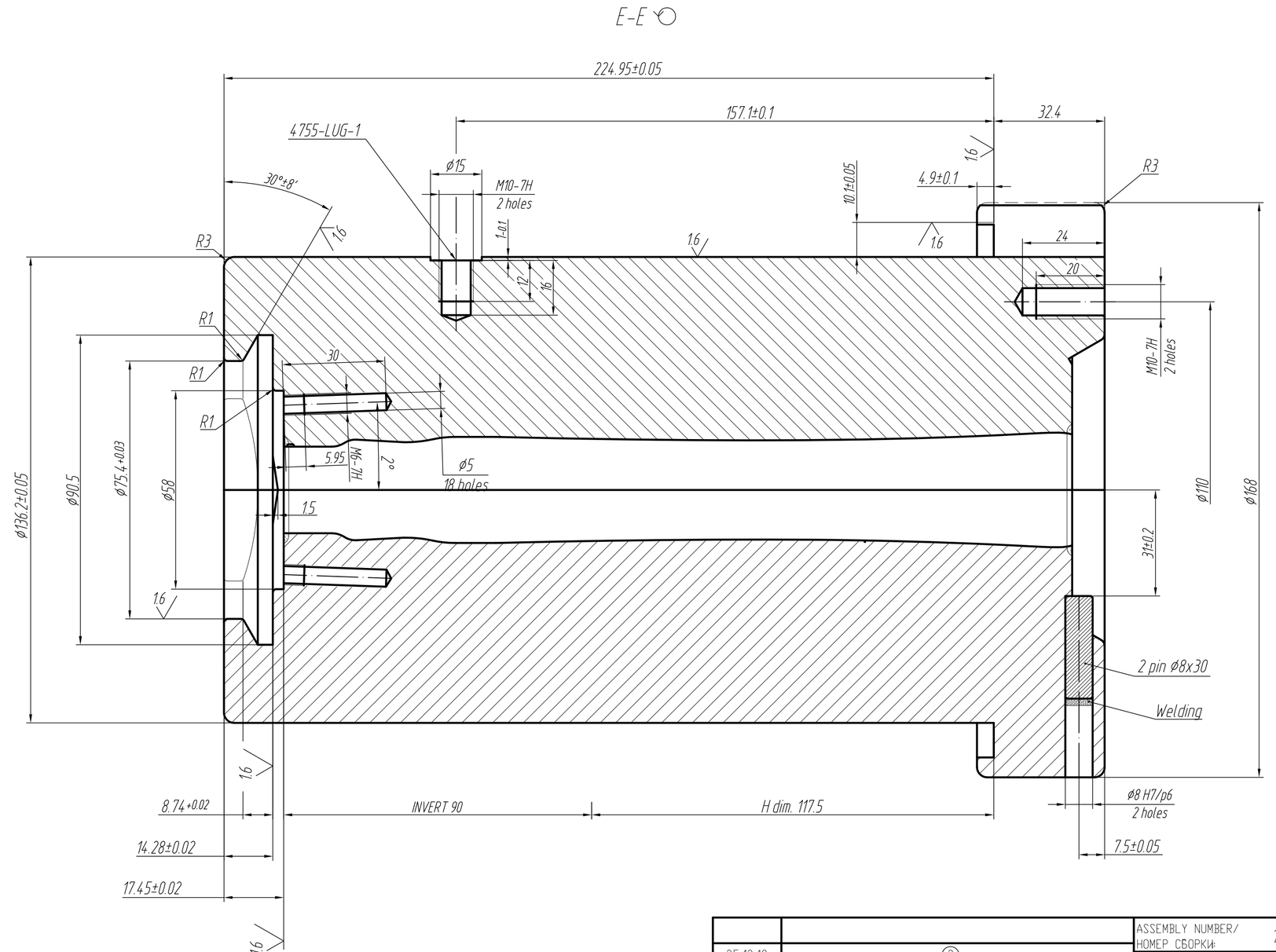


1. Both halve of mould (A & B) must be marked with same ordinal number and used together.
2. Gap in mould joint must be not more than 0,05 mm.
3. Positional tolerance of forming cavity axis T 0,1mm. Base – joint plane
4. Allowed deviation of forming cavity dimensions is not more than ±0,05 mm except for dimensions that are specially shown.
5. Keep sharp edges K.
6. *Reference only dimensions
7. H14, h14, ±IT14/2.
8. Hardness after welding HRC≥35..40.
9. Mark: Razmov a 0.5L
   Mark: 4755
   Mark ordinal number (h=10) & PSI logo.
   Depth of marking–0,2...0,3 mm.

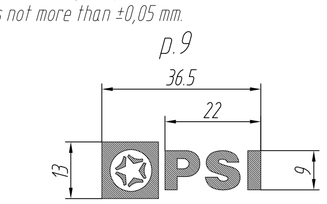


PSI
Адрес: 199034, Россия, Санкт-Петербург, В.О., 14 линия, д. 7.
Тел: +7(812)3282959
Контакт: info@psiglass.ru

| | | | | | | | |
|---|---|---|---|---|---|---|---|
| | | ASSEMBLY NUMBER/ НОМЕР СБОРКИ: 23 | MATERIAL/ МАТЕРИАЛ: CAST IRON (GS800) | MACHINE/ МАШИНА: EMHART GLASS-BB-DG 5 1/2"-8 | JOB TITLE/НАЗВАНИЕ РАБОТЫ: Razmov a 0.5L | SCALE/ МАСШТАБ: |
| 25.12.19 | 2 | INVERT CENTRE/ ИНВЕРТ: 90 | WELDING/ НАП/ЛАВКА: Neck and base (HRC 35...40) | DESIGNER/ ДИЗАЙНЕР: | DRAWING NUMBER/НОМЕР ЧЕРТЕЖА: 4755-BLK1-3 | 1:1 |
| 25.12.19 | 1 | 'H' DIMENSION/ РАЗМЕР "H": ФРАССТОЯНИЕ ОТ ОСИ ФОРМЫ ДО ВЕРХНЕЙ ПЛОСКОСТИ: 117.5 | QUANTITY/ КОЛИЧЕСТВО: | DATE/ ДАТА: 25.12.19 | | |
| DATE/ДАТА | REVISIONS/ИЗМЕНЕНИЯ | | | | | |