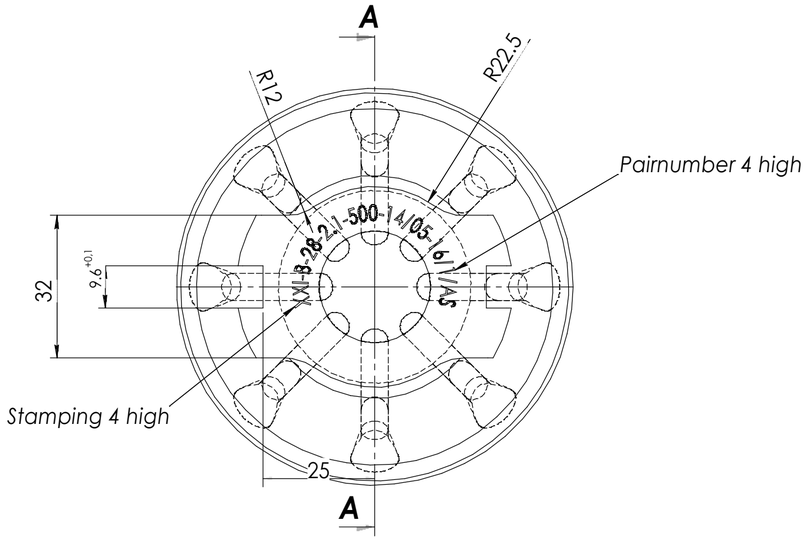

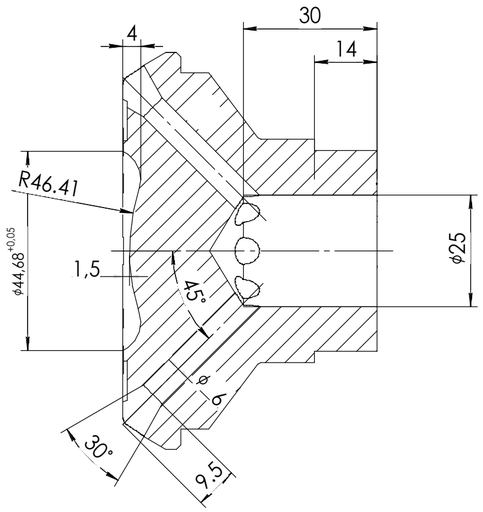

SECTION A-A

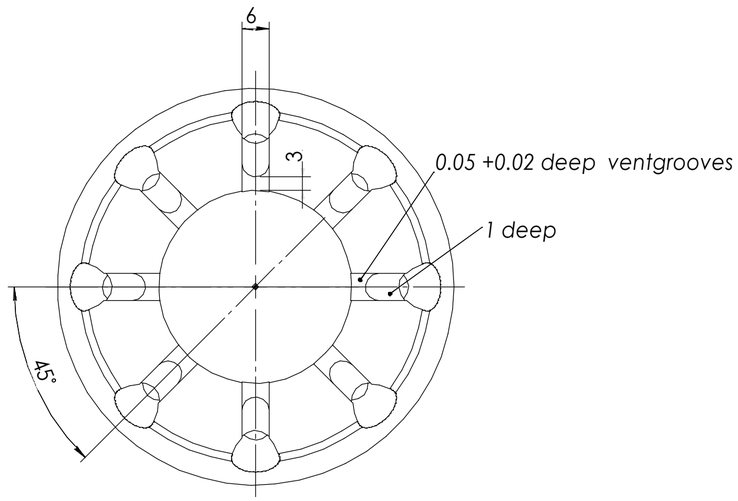

Профиль 2:1

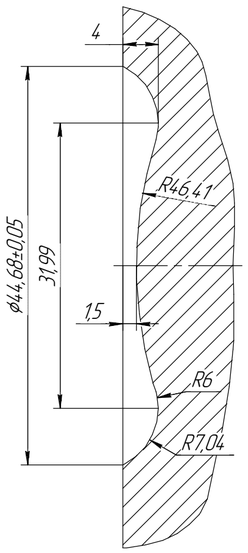

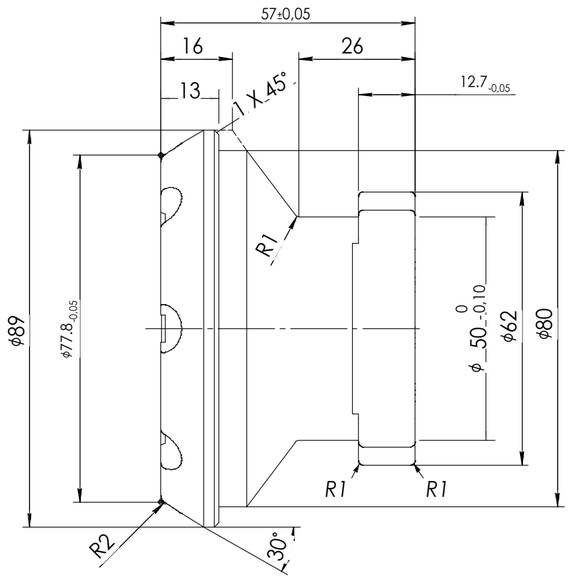

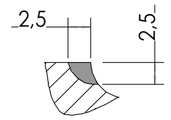

Metal match

INVERT CENTRE : -
H' DIMENSION : -
ASSEMBLY : -

TOLERANCES : UNLESS OTHERWISE STATED DIMS. 0.0 ±0.2 DIMS. 0.00 ±0.05 HALF HALF MAX :0.20 CONCENTRICITY :0.05		ITEM : BAFFLE AS -1986- ALATI STUHNE Ltd TOOLS FOR MANUFACTURE OF CONTAINER GLASS AND MACHINE PARTS
MATERIAL : STANDARD GS MACH : BB DG 5 1/2		
QUANTITY : 26	SCALE : 1:1	TITLE : XXI-B-28-2.1-500-14
DATE :16-8-2016	DESIGNER:	DRG No: AS424-06-01.01
CUSTOMER : ELIVOZO		