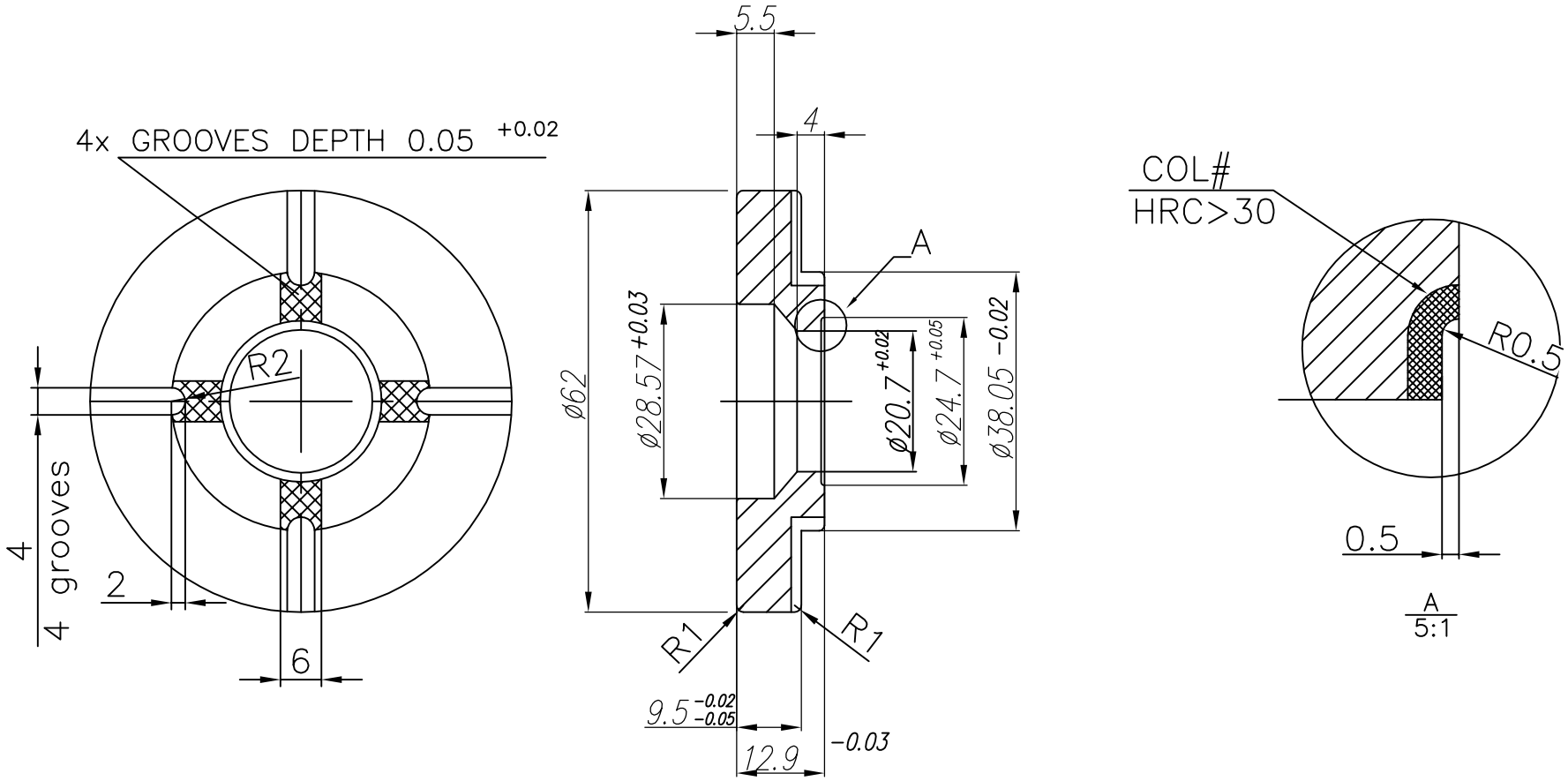

ENGRAVE: *XXI−B−28−2.16−700*
MOULD NO.

XXI−B−28−2.16−700 GUIDE PLATE		
SCALE 1:1	DRAWING NO. XXI−B−28−2.16−700 −GP−A1	
DRAW	CHECKED	APPROVED
11/05/2018		
MATERIAL	CAST IRON	
QUANTITY		