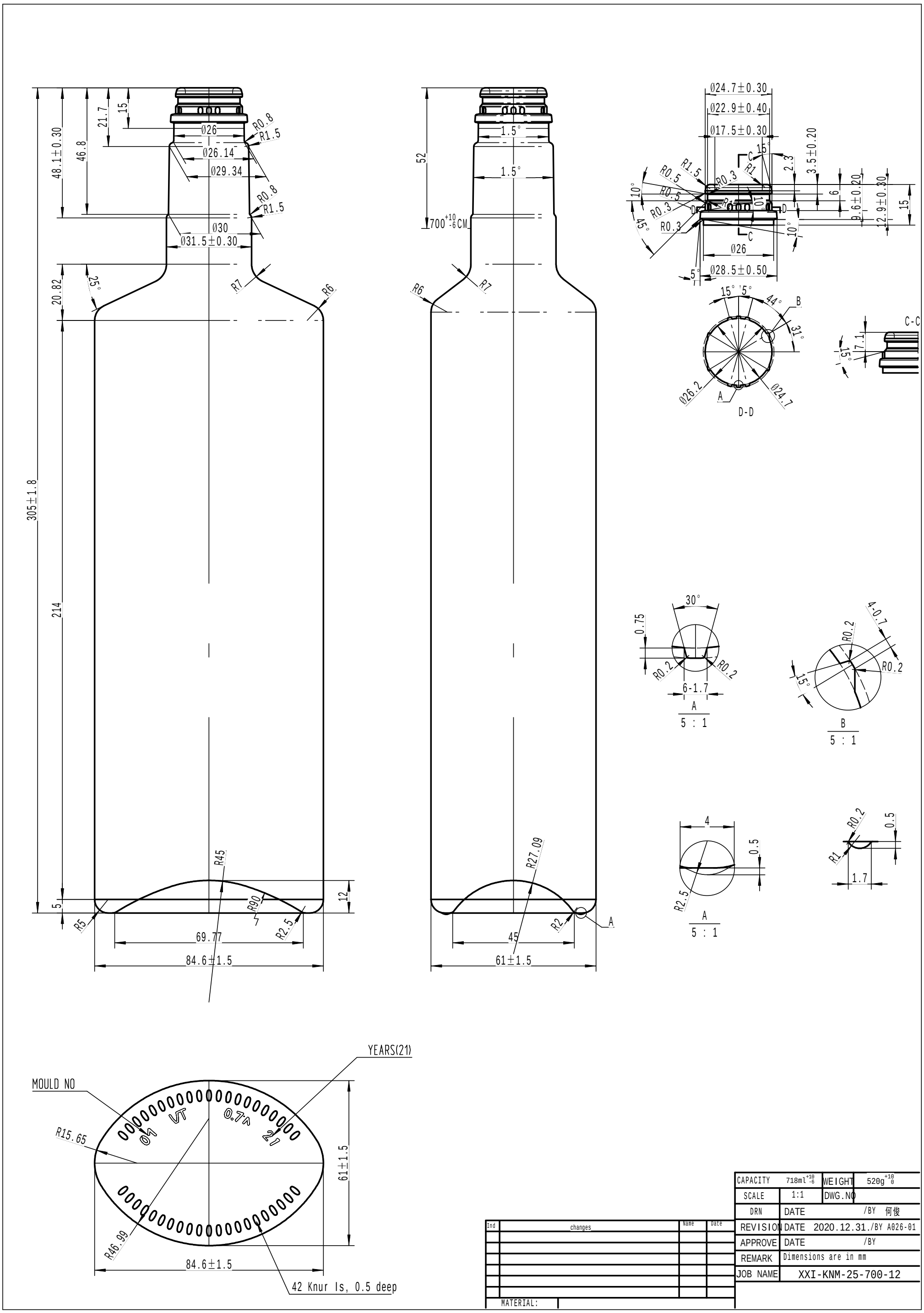

CAPACITY	718ml +10 -6	WEIGHT	520g +10 0
SCALE	1:1	DWG.NO	
DRN	DATE /BY 何俊		
REVISION	DATE 2020.12.31./BY A026-01		
APPROVE	DATE /BY		
REMARK	Dimensions are in mm		
JOB NAME	XXI-KNM-25-700-12		

Ind	changes	Name	Date
MATERIAL:			

利用 pdfFactory Pro 测试版本创建的PDF文档 www.pdffactory.com

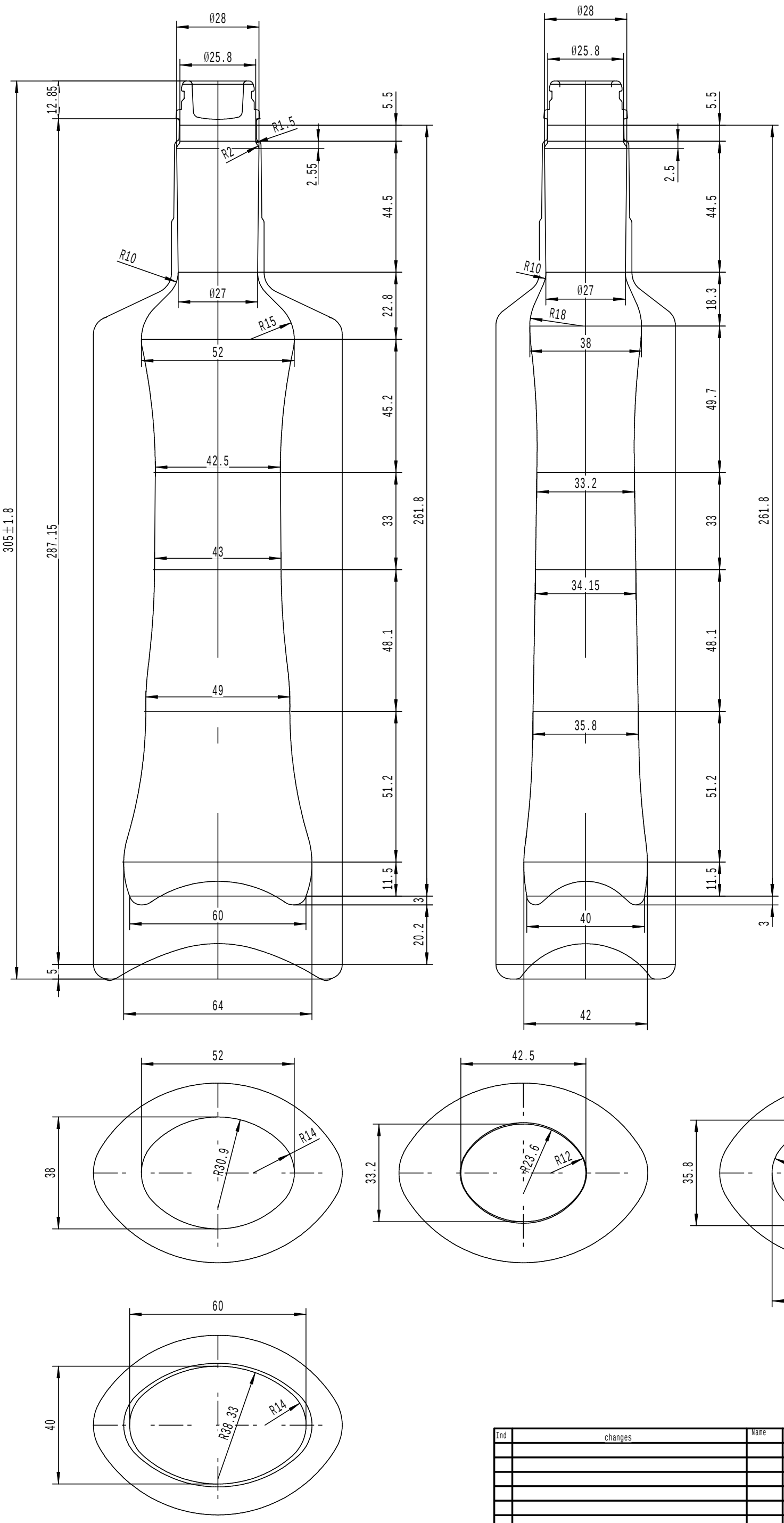

BLANK DATA

HOT GLASS FACTOR	520g x0.41
GOB CAPACITY	213.2ml
NR+GR-PL VOL.	3.6 ml
BM+BA DISP.	309 ml
OVERCAP 46.6%	99.4ml
S.L.HT FROM NR LINE	
"L"	0.91

Neck Bore

MOULD NECK	Ø26.2
BLANK NECK	Ø25.8
RING NECK	Ø26

Ind	changes	Name	Date
MATERIAL:			

CAPACITY	718ml $^{+10}_{-6}$	WEIGHT	520g $^{+10}_{0}$
SCALE	1:1	DWG.NO	
DRN	DATE	/BY 何俊	
REVISION	DATE 2020.12.31./BY A026-01		
APPROVE	DATE	/BY	
REMARK	Dimensions are in mm		
JOB NAME	XXI-KNM-25-700-12		

利用 pdfFactory Pro 测试版本创建的PDF文档 www.pdffactory.com

MOULD DATA		
COLD GLASS FACTOR		520g x0.4
CAP TO O'FLOW		208+718ml
SHRINKAGE(1.3%)		926x1.013
DISP OF SEATED FIN ABOVE MOULD		938ml -6.4ml
MOULD & BP DISP.		931.6ml

Req'd Blowmould Disp.
931.6±1.0 ml (Included Bp)

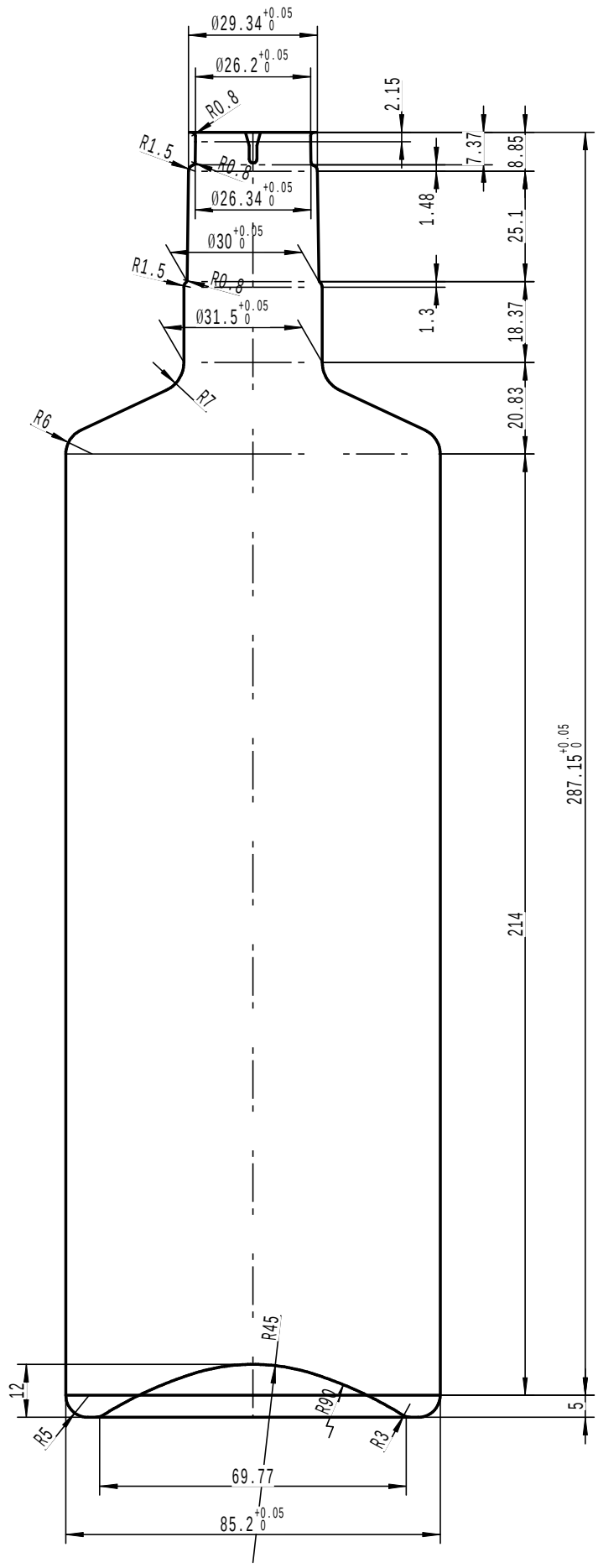

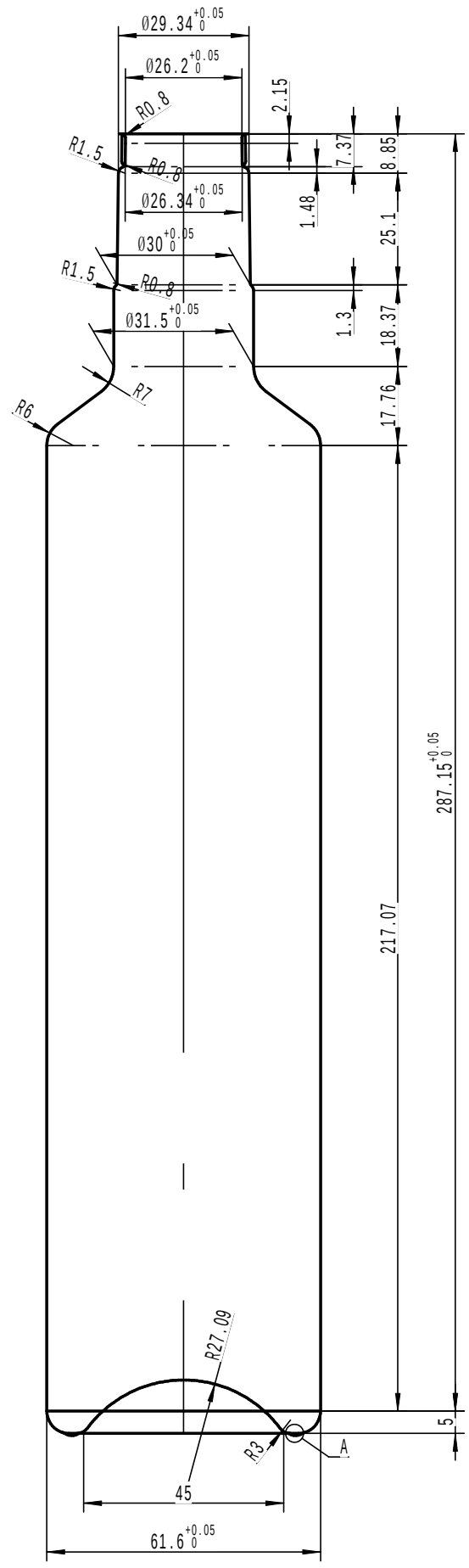

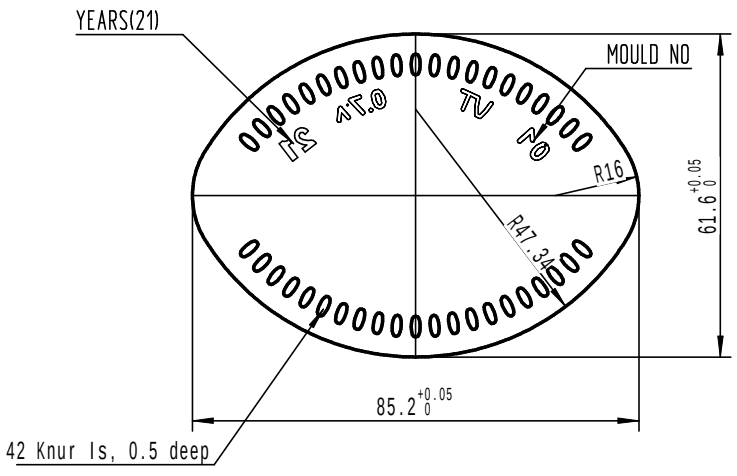

CAPACITY	718ml +10 -6	WEIGHT	520g +10 0
SCALE	1:1	DWG.NO	
DRN	DATE /BY 何俊		
REVISION	DATE 2020.12.31 /BY A026-01		
APPROVE	DATE /BY		
REMARK	Dimensions are in mm		
JOB NAME	XXI-KNM-25-700-12		

Ind	changes	Name	Date
	MATERIAL:		

利用 pdfFactory Pro 测试版本创建的PDF文档 www.pdffactory.com

INVERT=110

H=57.2

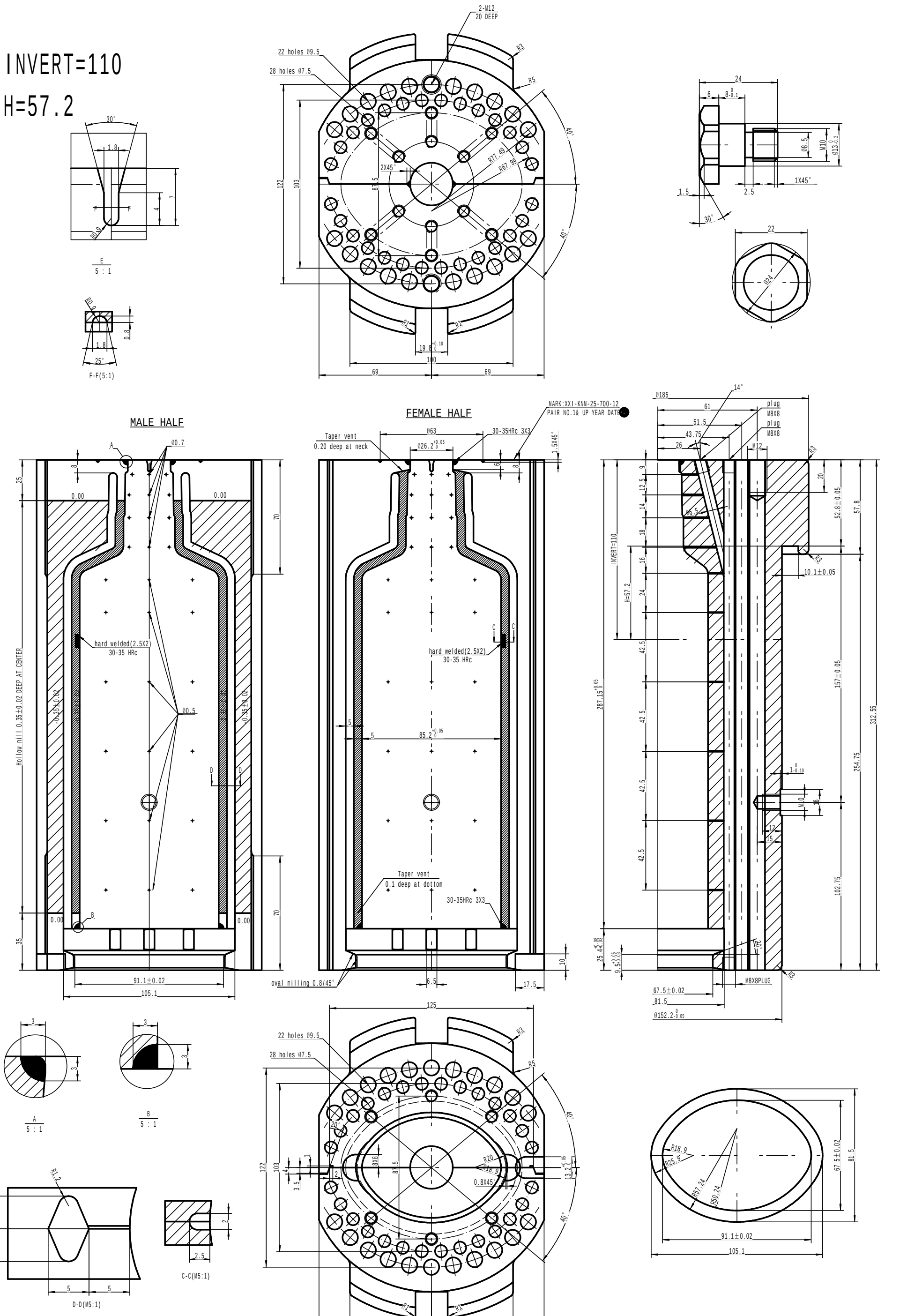

MOULD SEAMS
COLMONOY DETAIL

UNLESS OTHERWISE SPECIFIED

ALL DIMENSIONS IN 2 DECIMALS ±0.05mm

ALL DIMENSIONS IN 1 OR NO DECIMAL ±0.05mm

CAPACITY	718ml	WEIGHT	520g
SCALE	1:1	DWG.NO	
DRN	DATE /BY 何俊		
REVISION	DATE 2020.12.31./BY A026-01		
APPROVE	DATE /BY		
REMARK	Dimensions are in mm		
JOB NAME	XXI-KNM-25-700-12		

End	changes	name	date
MATERIAL:	CAST IRON+METAL		

利用 pdfFactory Pro 测试版本创建的PDF文档 www.pdffactory.com

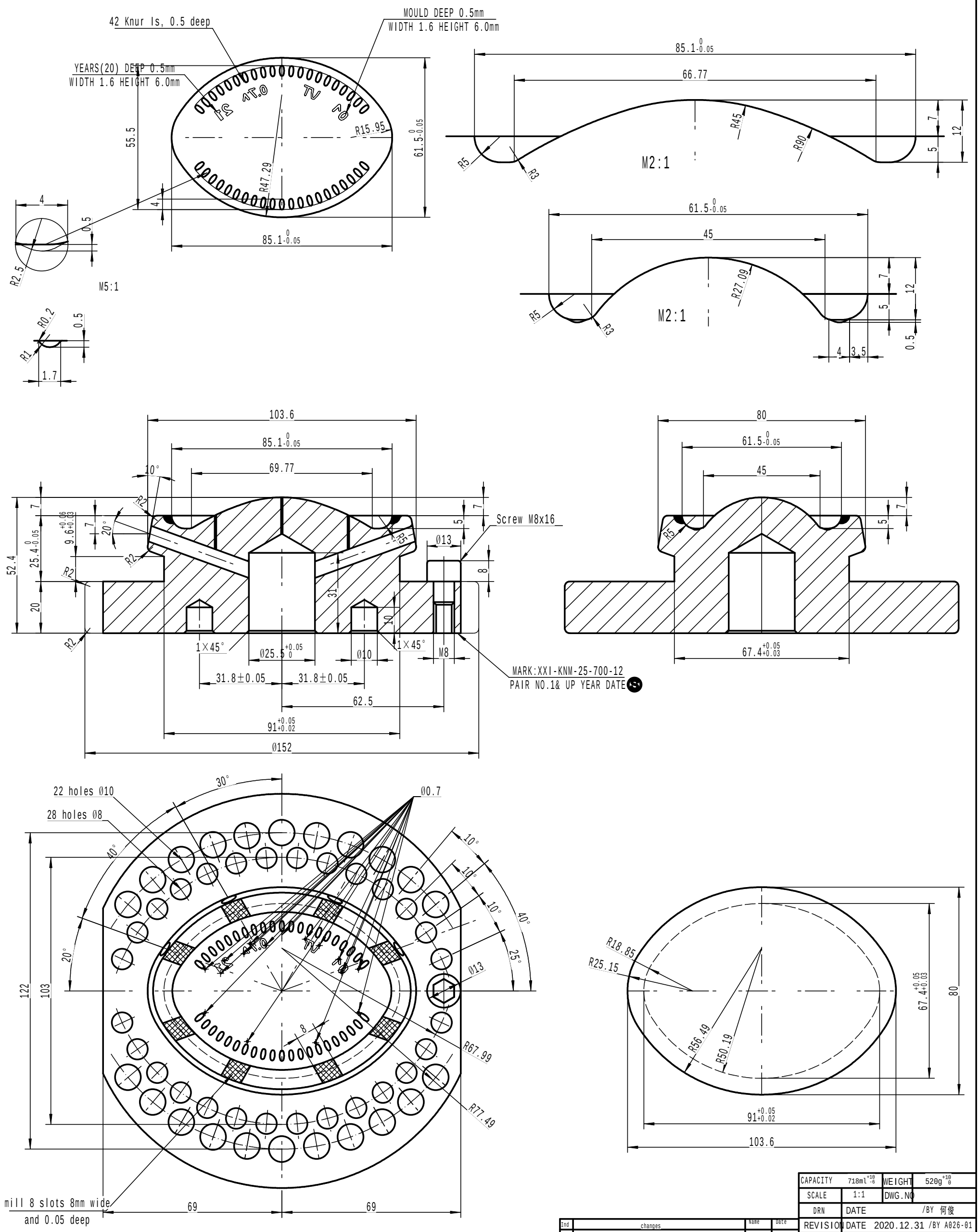

CAPACITY	718ml +10 -6	WEIGHT	520g +10 0
SCALE	1:1	DWG.NO	
DRN	DATE /BY 何俊		
REVISION	DATE 2020.12.31 /BY A026-01		
APPROVE	DATE /BY		
REMARK	Dimensions are in mm		
JOB NAME	XXI-KNM-25-700-12		

Ind	changes	Name	Date
MATERIAL:	BRONZE		

利用 pdfFactory Pro 测试版本创建的PDF文档 www.pdffactory.com

INVERT=110

H=117.5

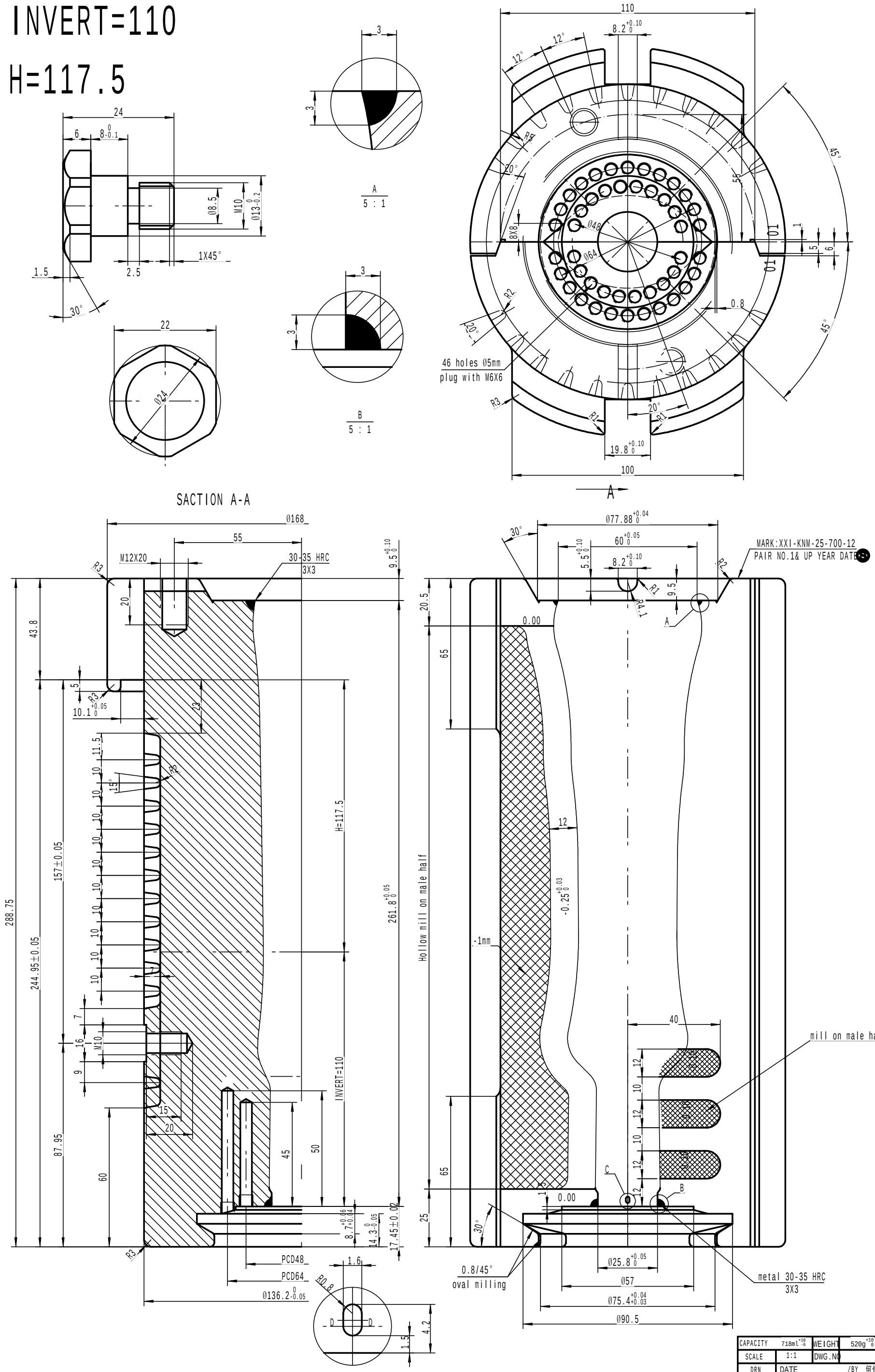

利用 pdfFactory Pro 测试版本创建的PDF文档 www.pdffactory.com

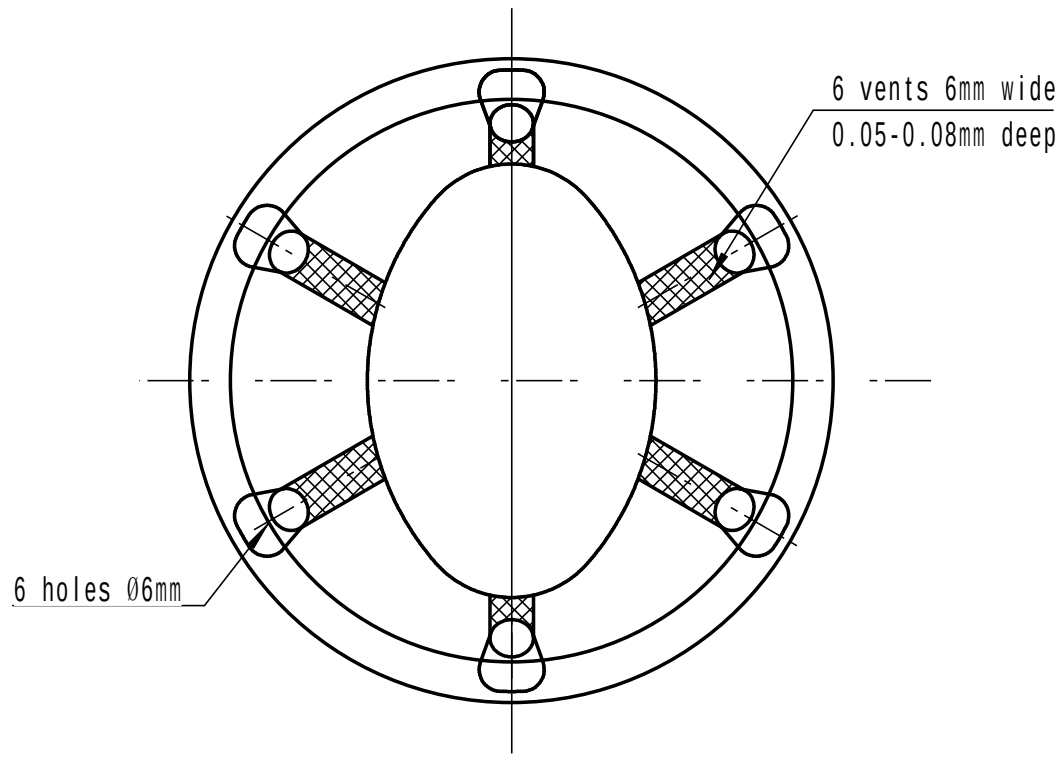

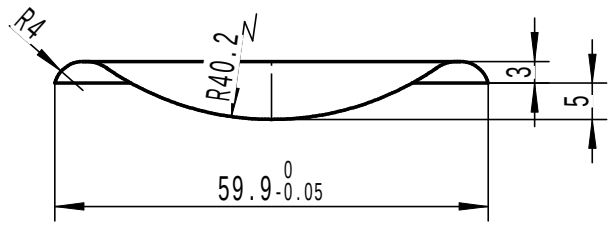

SECTION A-A

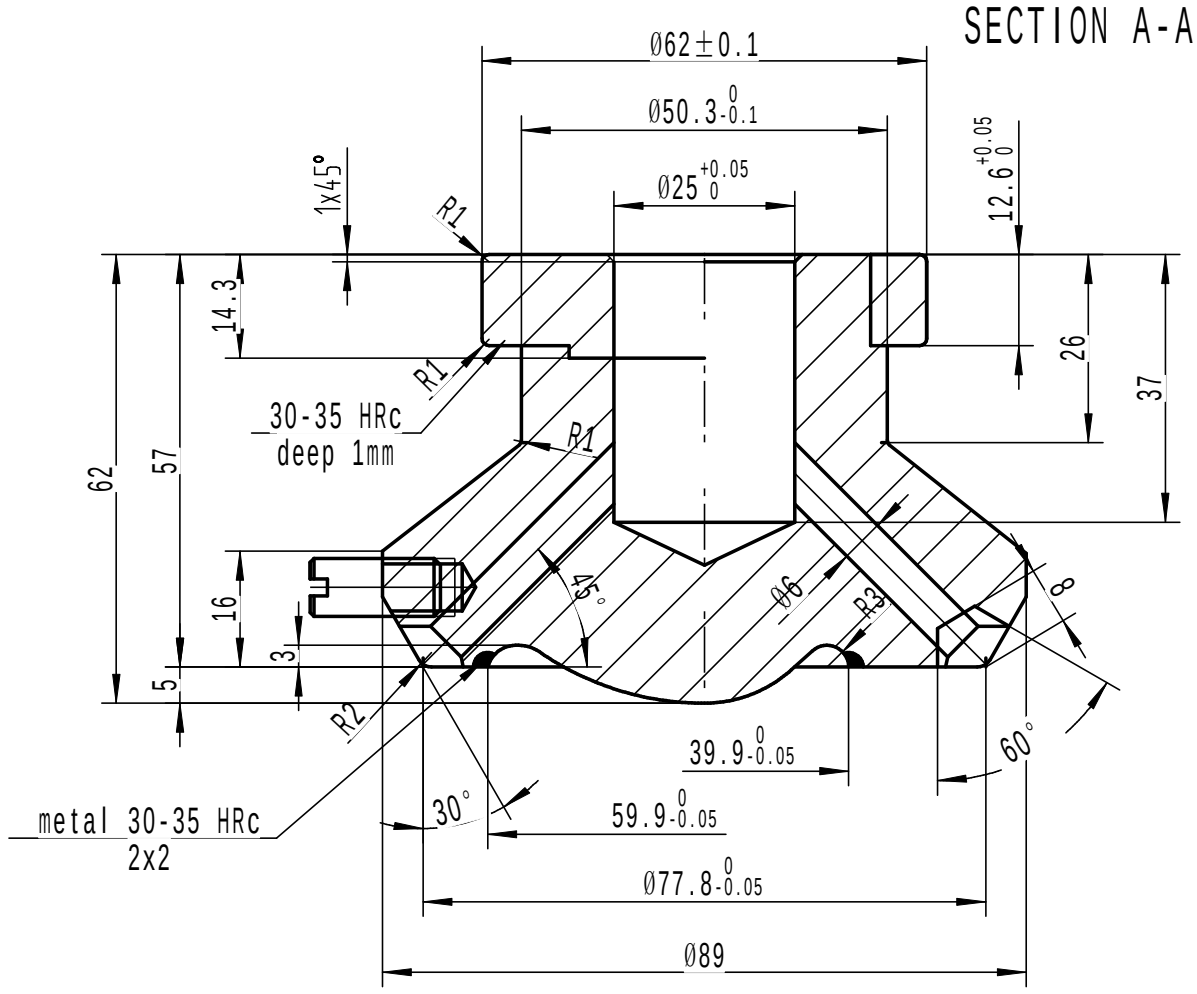

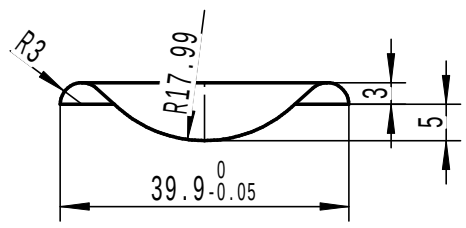

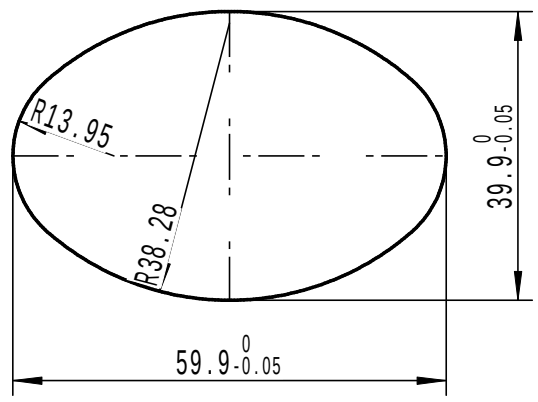

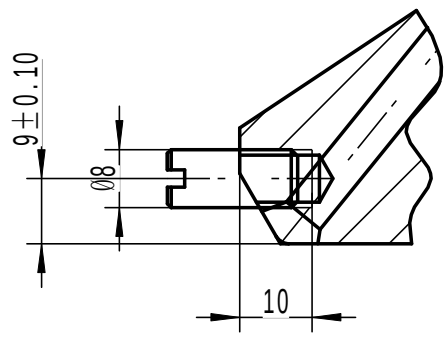

UNLESS OTHERWISE SPECIFIED
ALL DIMENSIONS IN 2 DECIMALS ±0.05mm
ALL DIMENSIONS IN 1 OR NO DECIMAL ±0.05mm

Ind	changes	Name	Date
MATERIAL:	CAST IRON+METAL		

CAPACITY	718ml +10 -6	WEIGHT	520g +10 0
SCALE	1:1	DWG.NO	
DRN	DATE	/BY 何俊	
REVISION	DATE 2020.12.31	/BY A026-01	
APPROVE	DATE	/BY	
REMARK	Dimensions are in mm		
JOB NAME	XXI-KNM-25-700-12		

利用 pdfFactory Pro 测试版本创建的PDF文档 www.pdffactory.com

MARK:XXI-KNM-25-700-12
PAIR NO.1& UP YEAR DATE

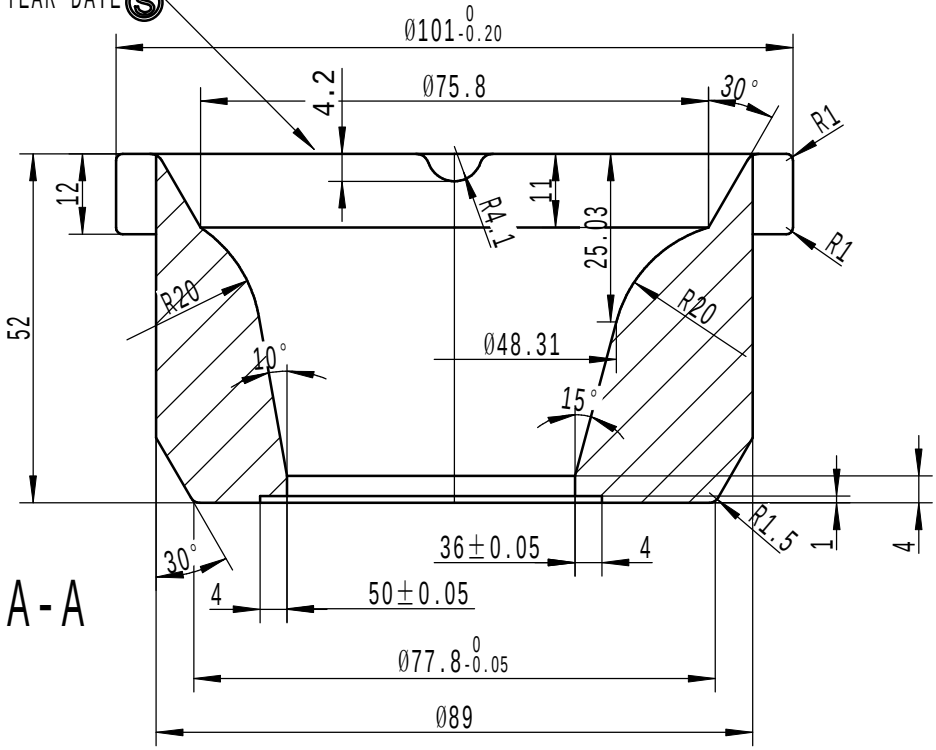

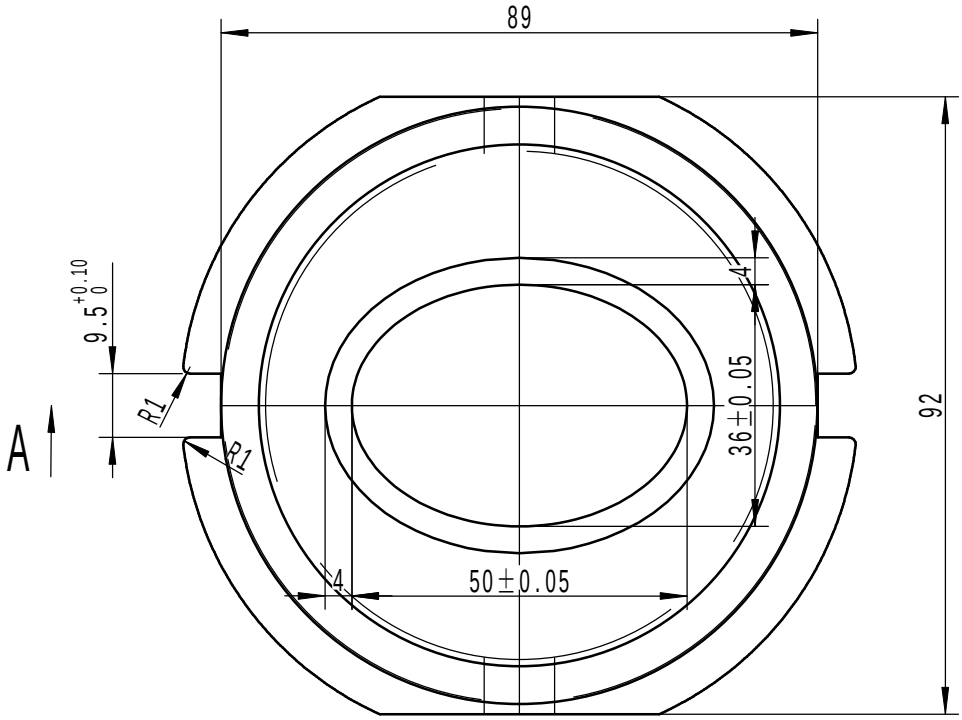

UNLESS OTHERWISE SPECIFIED A
ALL DIMENSIONS IN 2 DECIMALS ±0.05mm
ALL DIMENSIONS IN 1 OR NO DECIMAL ±0.05mm

Ind	changes	Name	Date
MATERIAL:	CAST IRON		

CAPACITY	718ml +10 -6	WEIGHT	520g +10 0
SCALE	1:1	DWG.NO	
DRN	DATE	/BY 何俊	
REVISION	DATE 2021.01.05	/BY A026-01	
APPROVE	DATE	/BY	
REMARK	Dimensions are in mm		
JOB NAME	XXI-KNM-25-700-12		

利用 pdfFactory Pro 测试版本创建的PDF文档 www.pdffactory.com

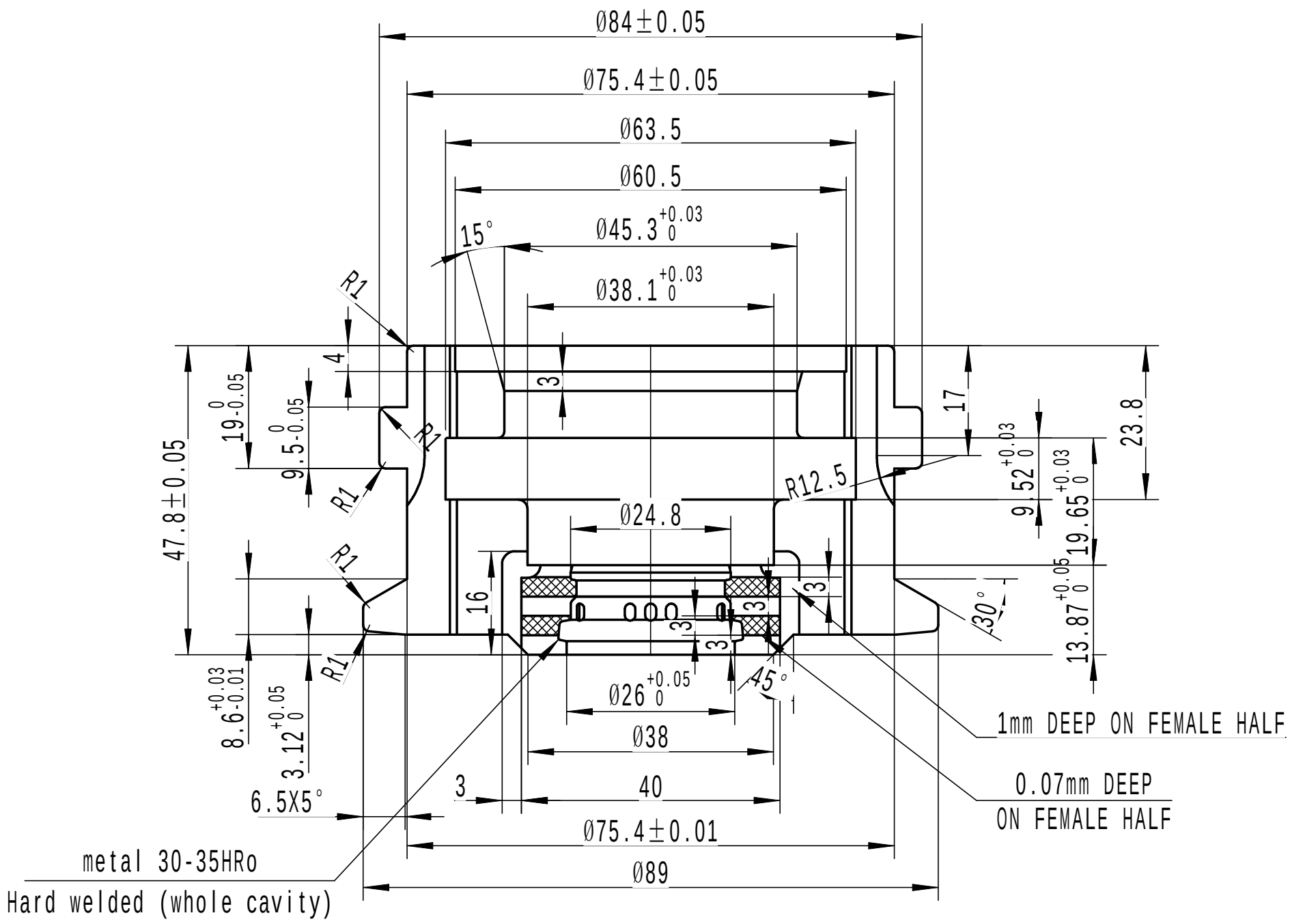

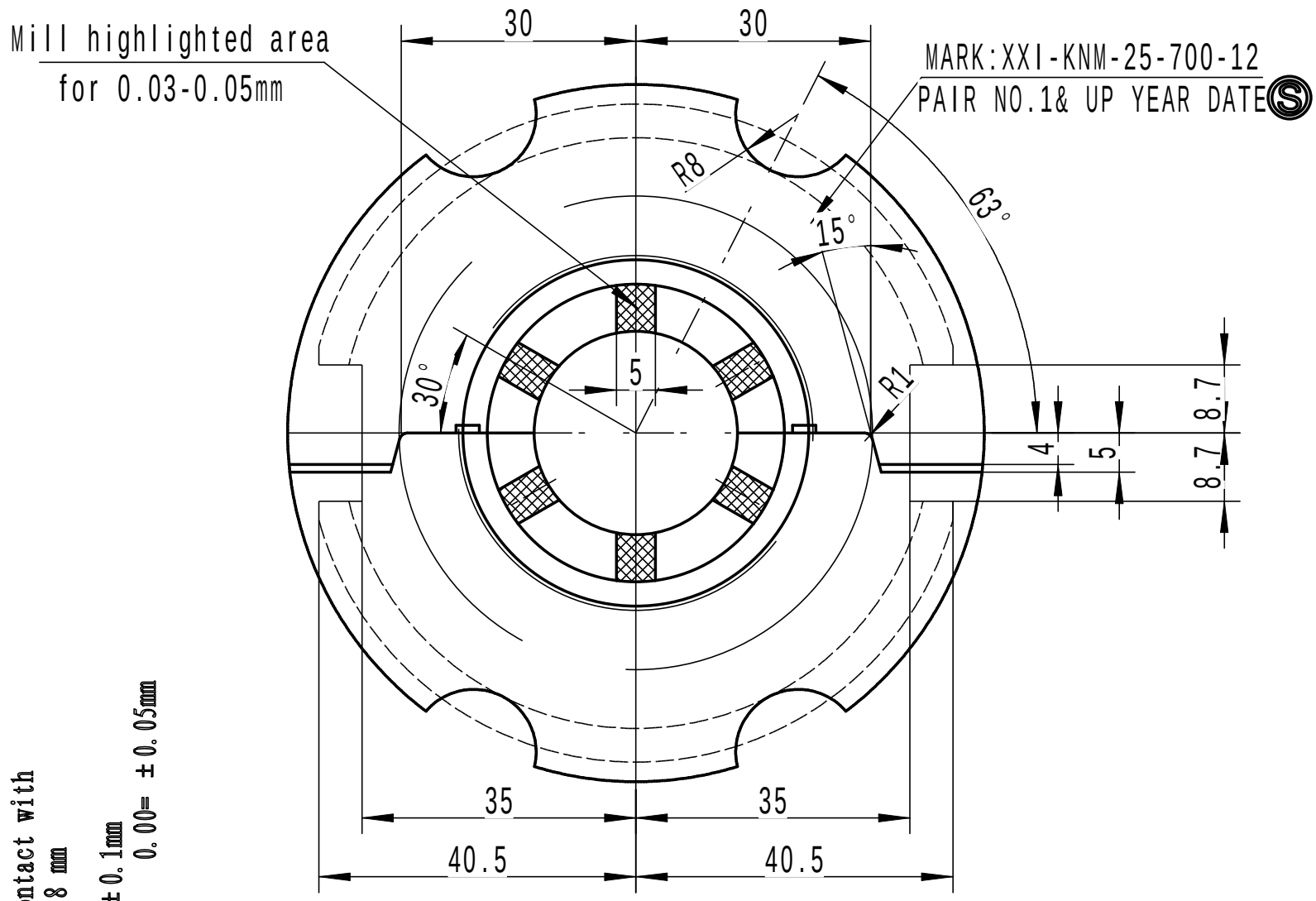

Oštre rubove koji nisu u dodiru sa staklom zaobliti s R=0.8 mm

Netolerirane mjere: 0.0= ±0.1
0.00= ±0.05

Sharp edges which are not in contact with glass, rounded with radius R=0.8 mm

Untoleranced dimensions: 0.0= ±0.1mm
0.00= ±0.05mm

UNLESS OTHERWISE SPECIFIED
ALL DIMENSIONS IN 2 DECIMALS ±0.05mm
ALL DIMENSIONS IN 1 OR NO DECIMAL ±0.05mm

Ind	changes	Name	Date

MATERIAL: Bronze

CAPACITY	718ml +10 -6	WEIGHT	515g +10 0
SCALE	1:1	DWG.NO	
DRN	DATE /BY 何俊		
REVISION	DATE 2020.09.09 /BY A026-01		
APPROVE	DATE /BY		
REMARK	Dimensions are in mm		
JOB NAME	XXI-KNM-25-700-12		

利用 pdfFactory Pro 测试版本创建的PDF文档 www.pdffactory.com

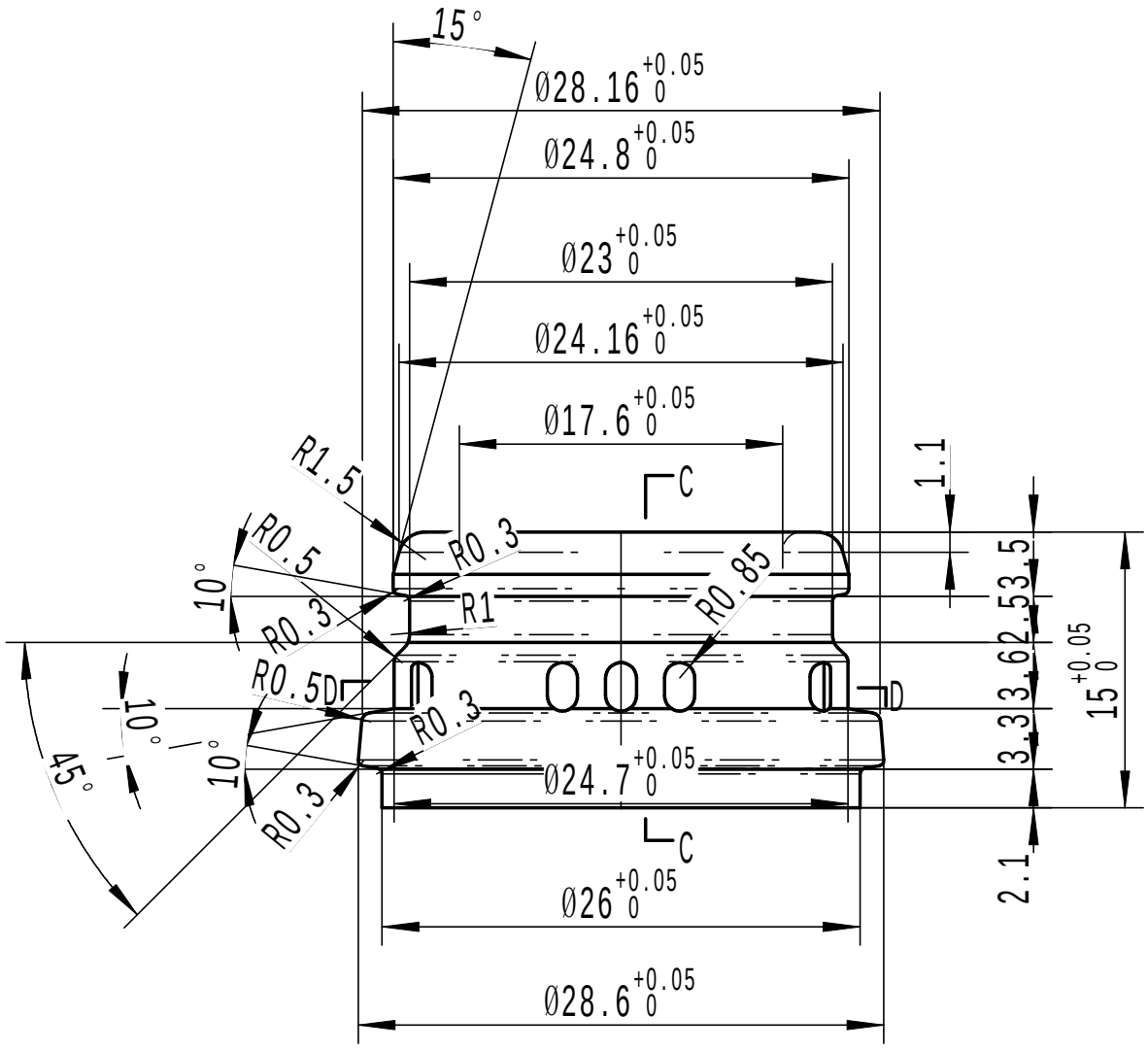

C-C

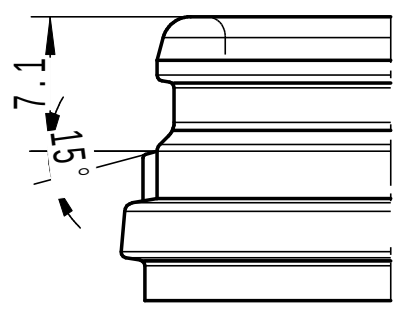

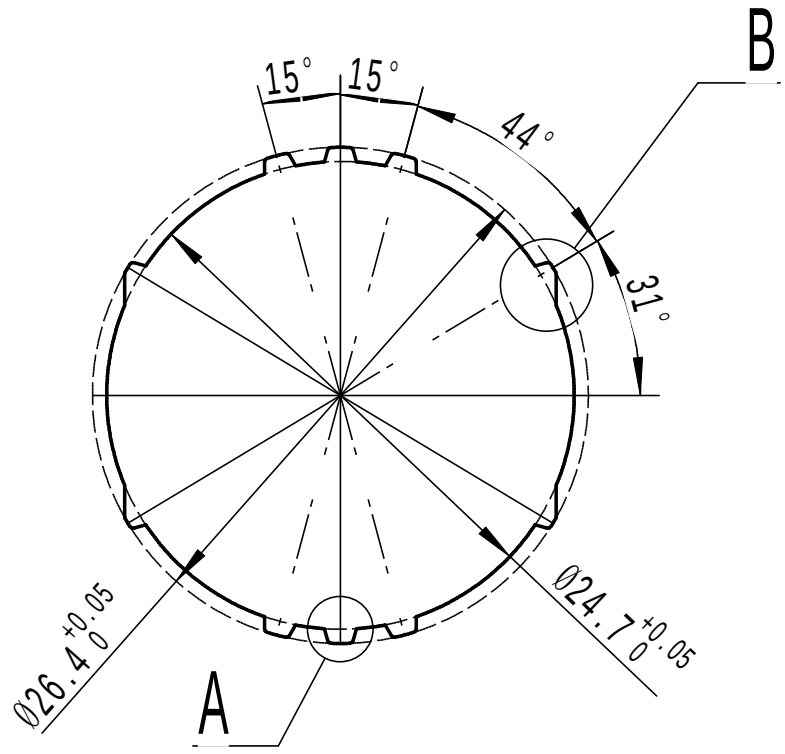

D-D

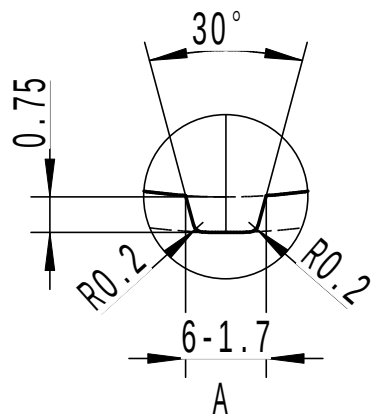

A
5 : 1

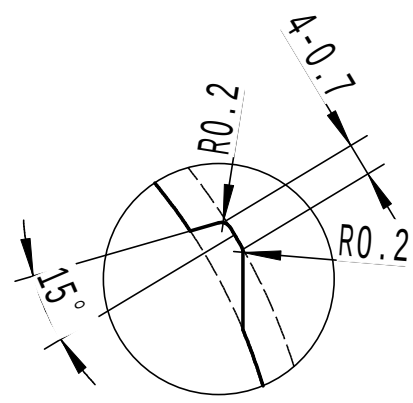

B
5 : 1

Netolerirane mjere na fazoni: ±0.05mm
Untoleranced dimensions of cavity: ±0.05mm

Ind	changes	Name	Date
MATERIAL:			

CAPACITY	718ml +10 -6	WEIGHT	515g +10 0
SCALE	1:1	DWG.NO	
DRN	DATE /BY 何俊		
REVISION	DATE 2020.09.09 /BY A026-01		
APPROVE	DATE /BY		
REMARK	Dimensions are in mm		
JOB NAME	XXI-KNM-25-700-12		

利用 pdfFactory Pro 测试版本创建的PDF文档 www.pdffactory.com

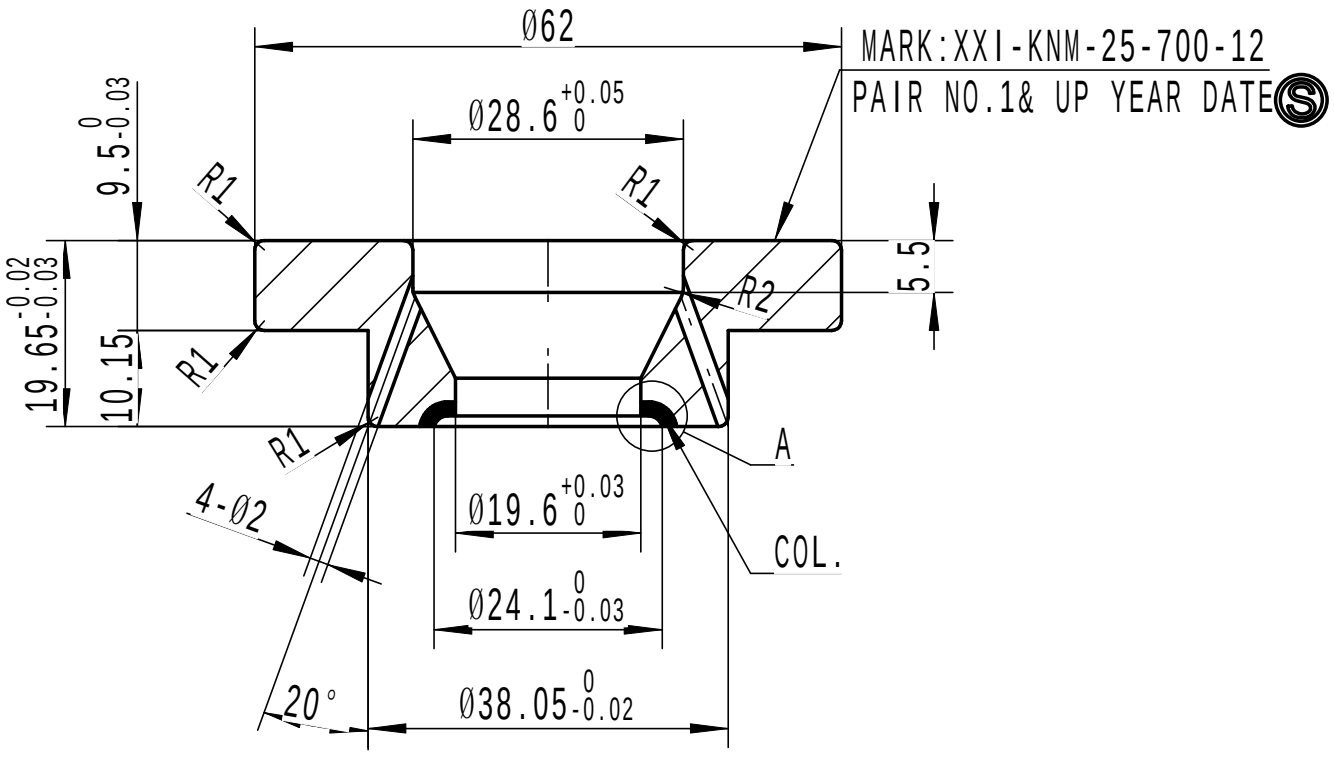

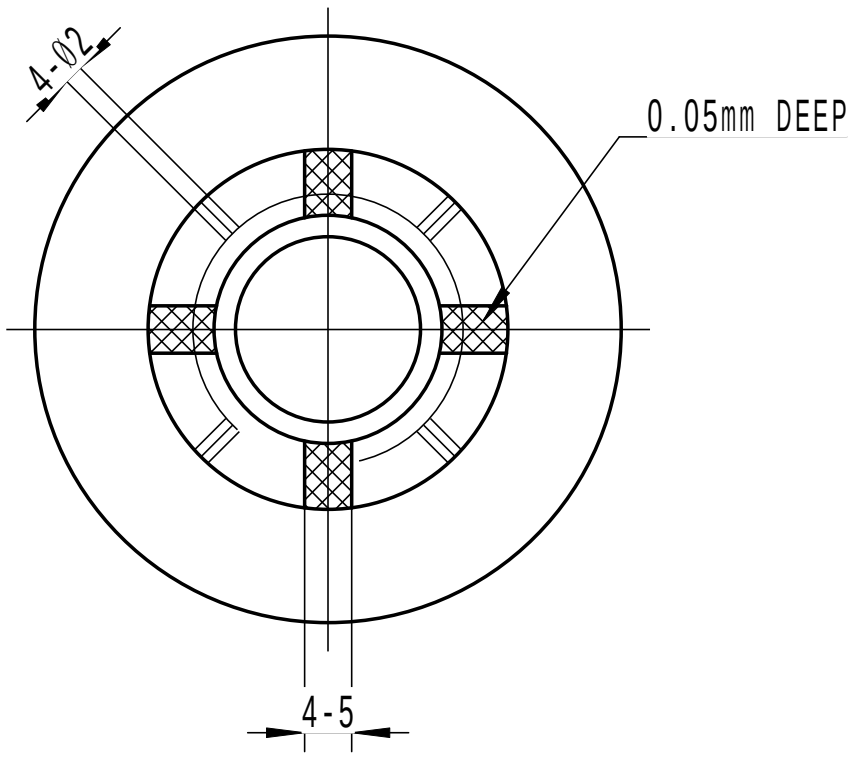

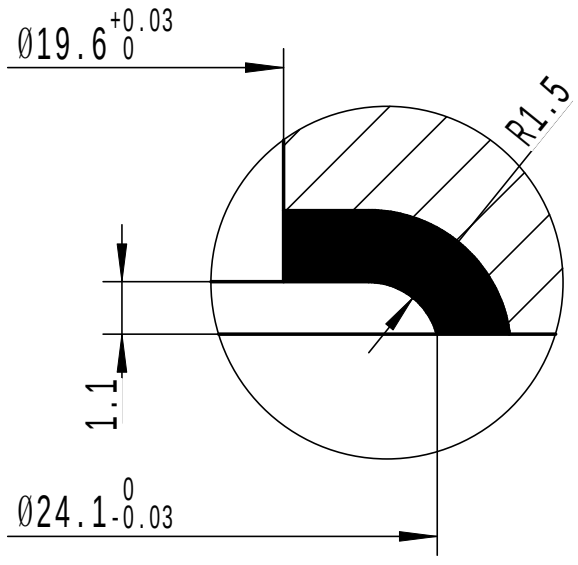

A
5 : 1

UNLESS OTHERWISE SPECIFIED
ALL DIMENSIONS IN 2 DECIMALS ±0.05mm
ALL DIMENSIONS IN 1 OR NO DECIMAL ±0.05mm

Ind	changes	Name	Date
MATERIAL:	Still+METAL		

CAPACITY	718ml +10 -6	WEIGHT	515g +10 0
SCALE	1:1	DWG.NO	
DRN	DATE /BY 何俊		
REVISION	DATE 2020.09.09 /BY A026-01		
APPROVE	DATE /BY		
REMARK	Dimensions are in mm		
JOB NAME	XXI-KNM-25-700-12		

利用 pdfFactory Pro 测试版本创建的PDF文档 www.pdffactory.com

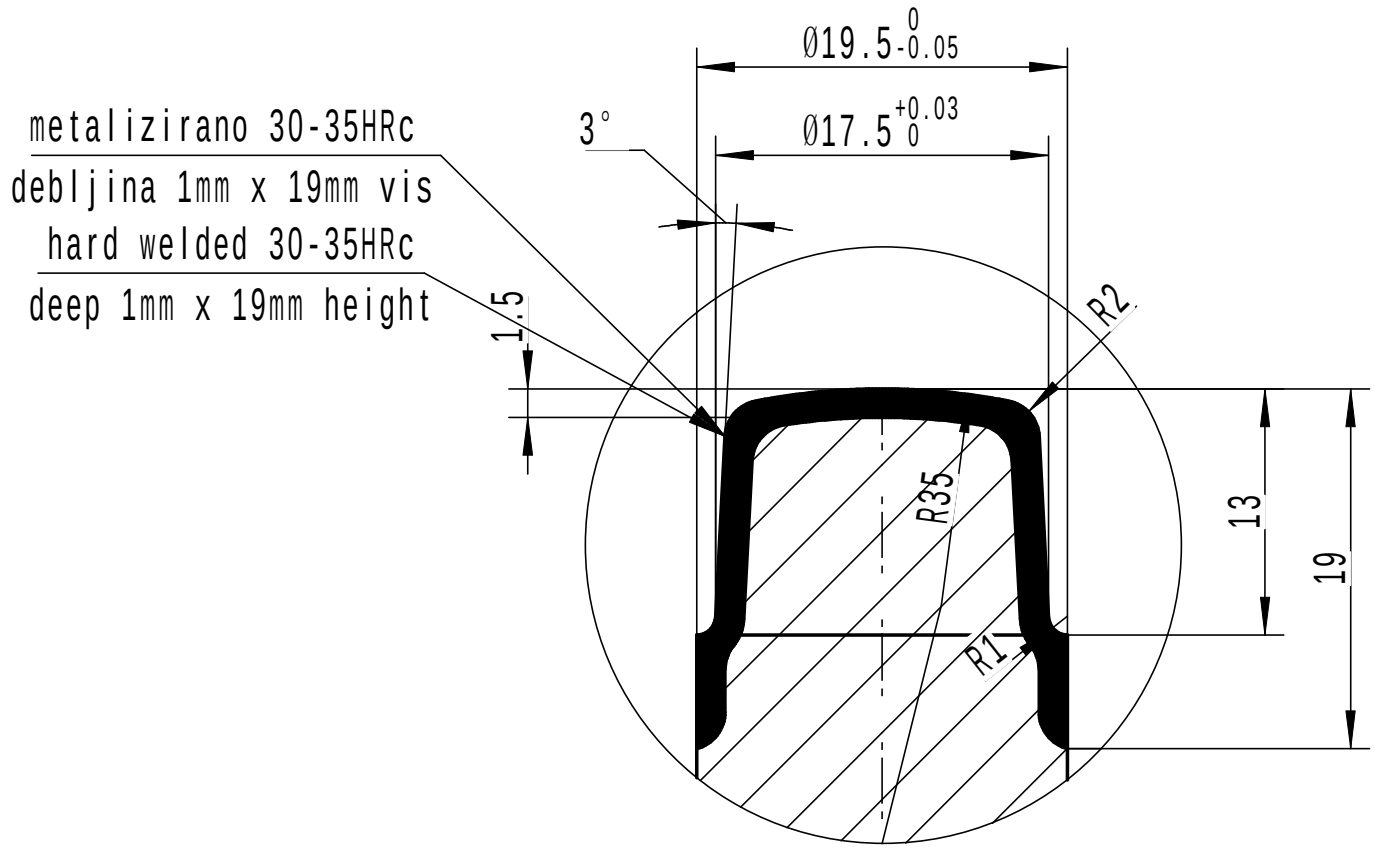

A
2 : 1

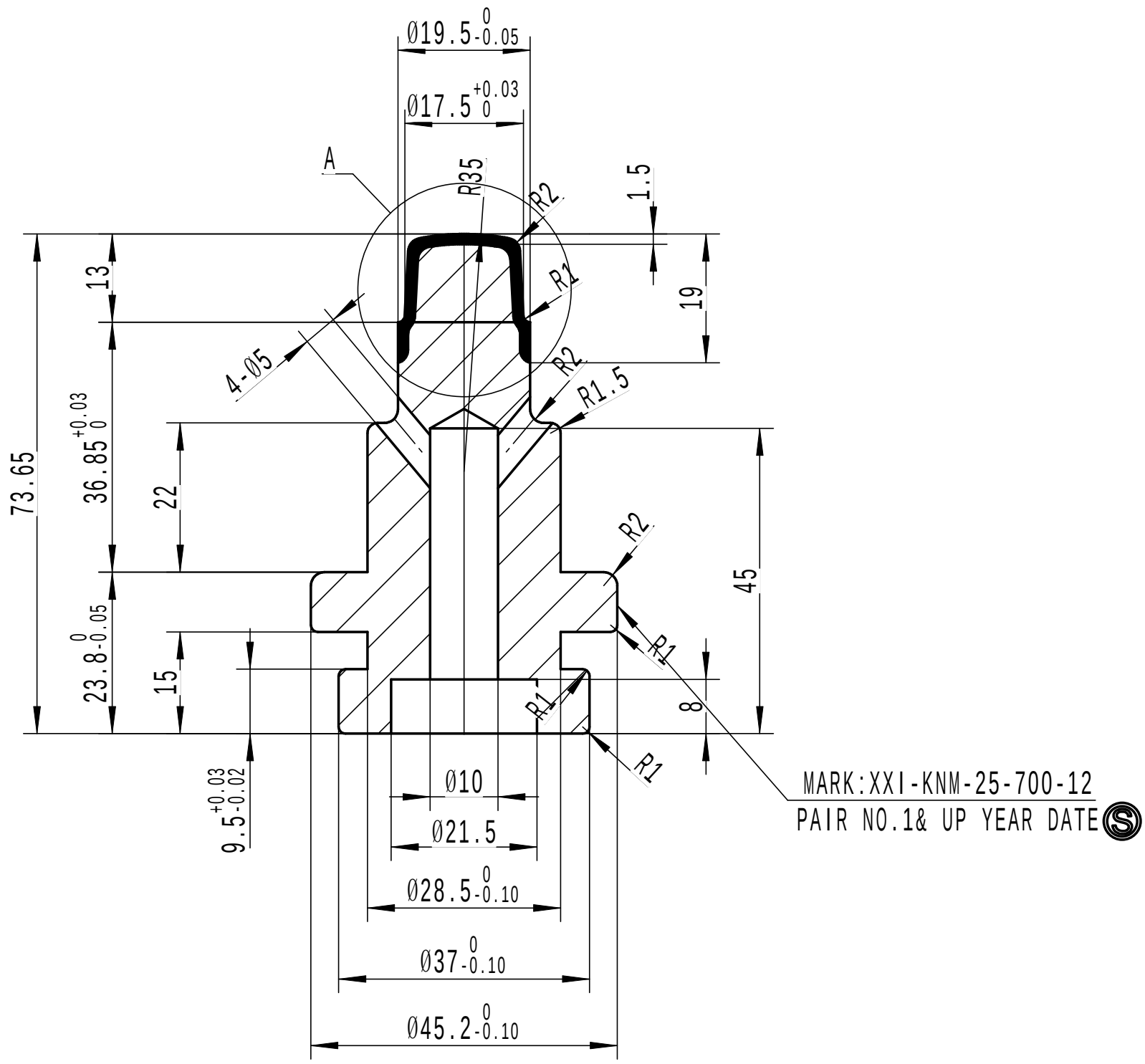

UNLESS OTHERWISE SPECIFIED
ALL DIMENSIONS IN 2 DECIMALS ±0.05mm
ALL DIMENSIONS IN 1 OR NO DECIMAL ±0.05mm

Ind	changes	Name	Date
MATERIAL:	Still+METAL		

CAPACITY	718ml +10 -6	WEIGHT	515g +10 0
SCALE	1:1	DWG.NO	
DRN	DATE	/BY	何俊
REVISION	DATE 2020.09.09	/BY	A026-01
APPROVE	DATE	/BY	
REMARK	Dimensions are in mm		
JOB NAME	XXI-KNM-25-700-12		

利用 pdfFactory Pro 测试版本创建的PDF文档 www.pdffactory.com

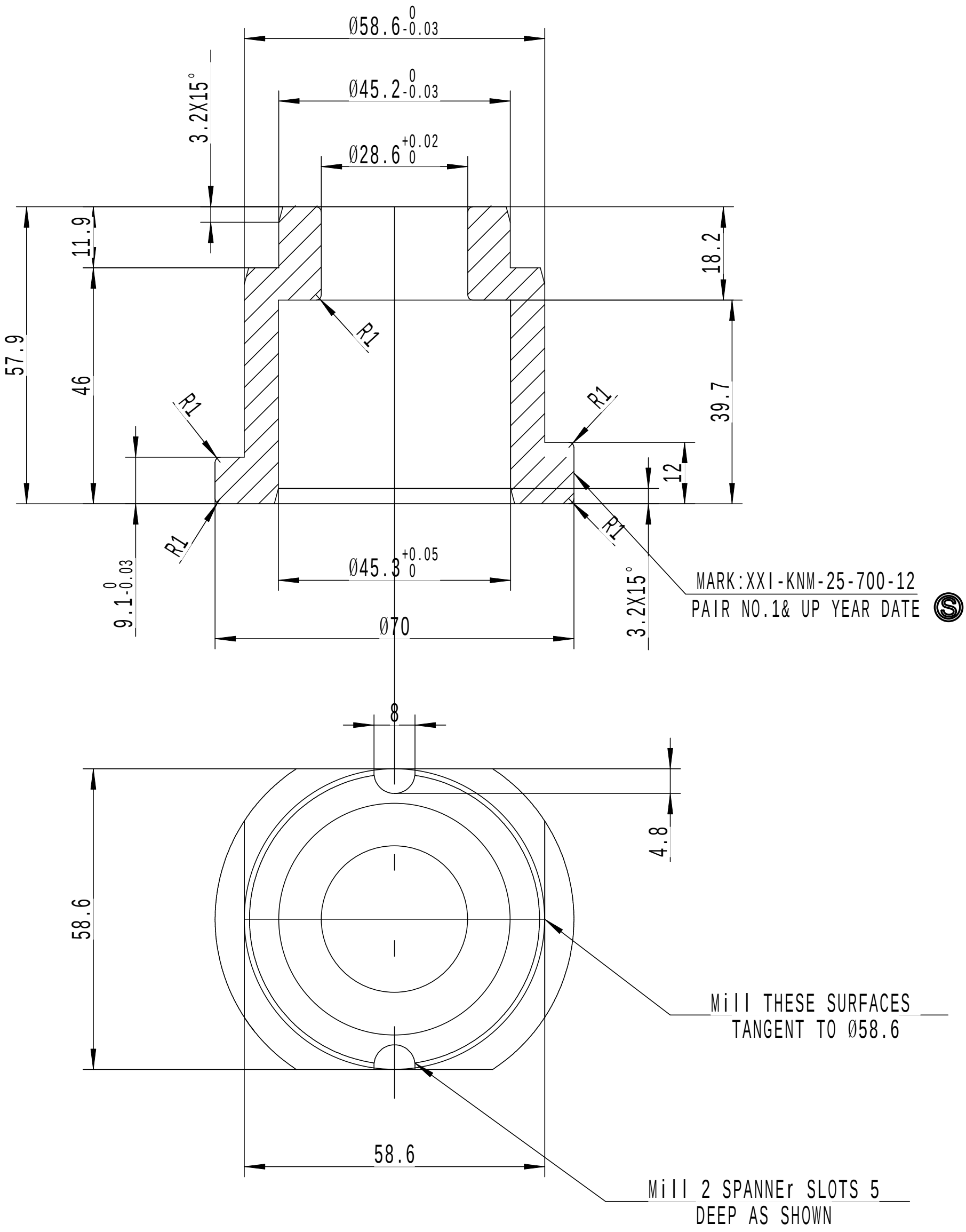

CAPACITY	718ml +10 -6	WEIGHT	515g +10 0
SCALE	1:1	DWG.NO	
DRN	DATE	/BY	何俊
REVISION	DATE 2020.09.09	/BY	A026-01
APPROVE	DATE	/BY	
REMARK	Dimensions are in mm		
JOB NAME	XXI-KNM-25-700-12		

Ind	changes	Name	Date
MATERIAL:	CAST IRON		

利用 pdfFactory Pro 测试版本创建的PDF文档 www.pdffactory.com

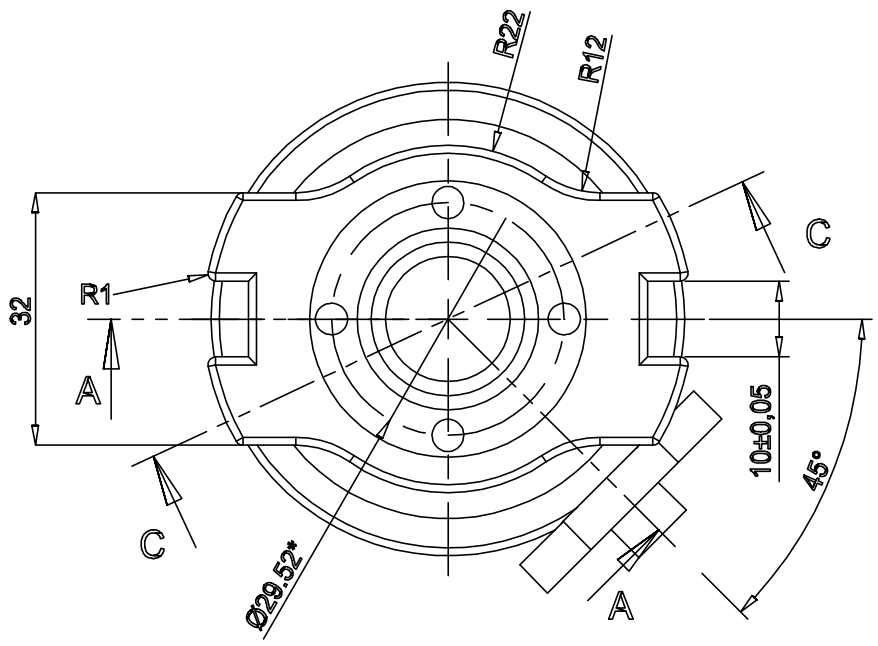

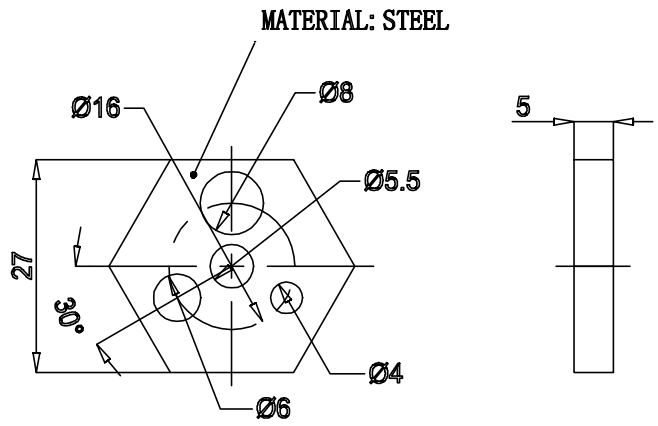

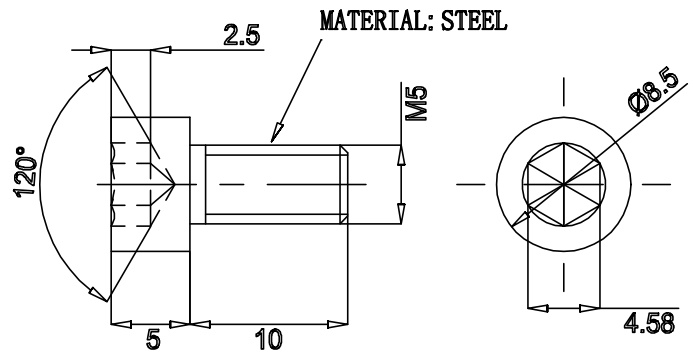

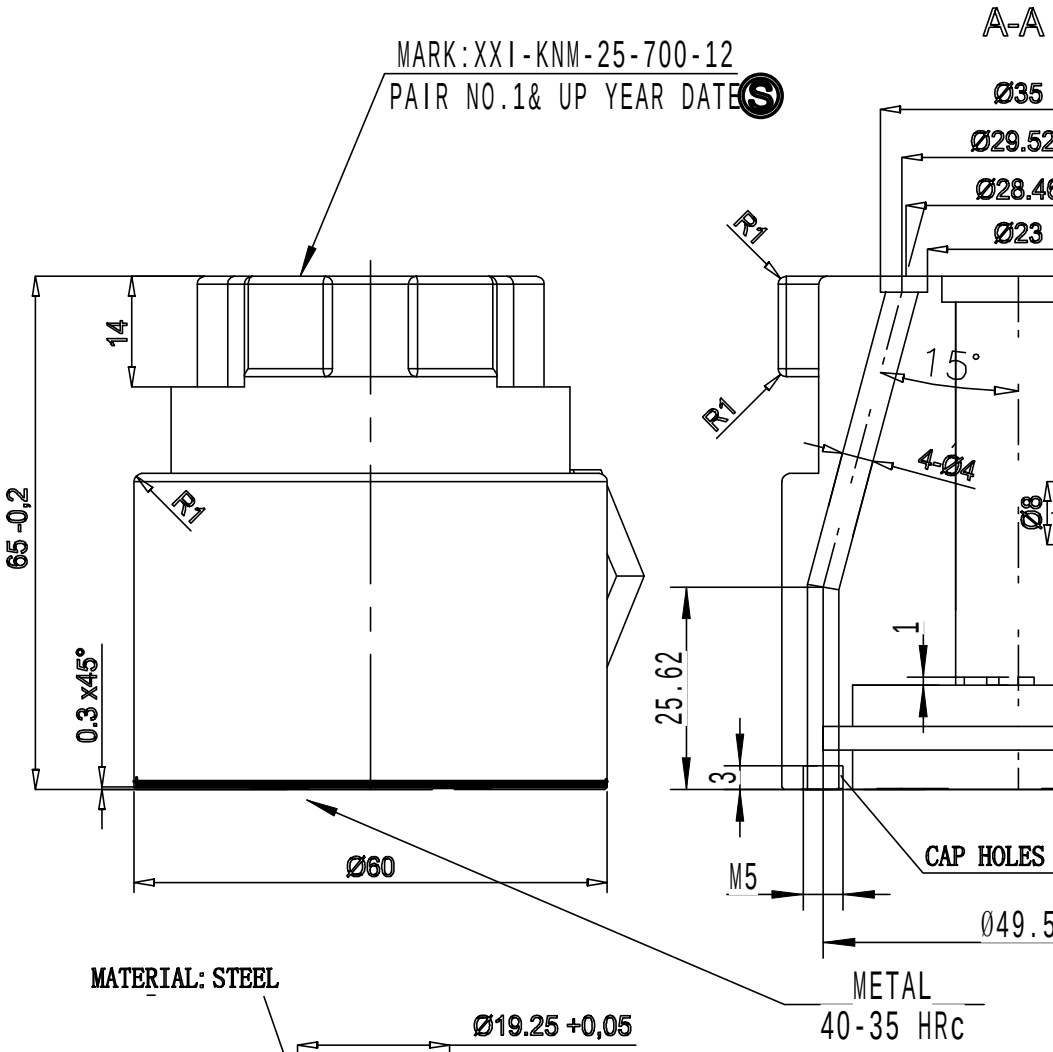

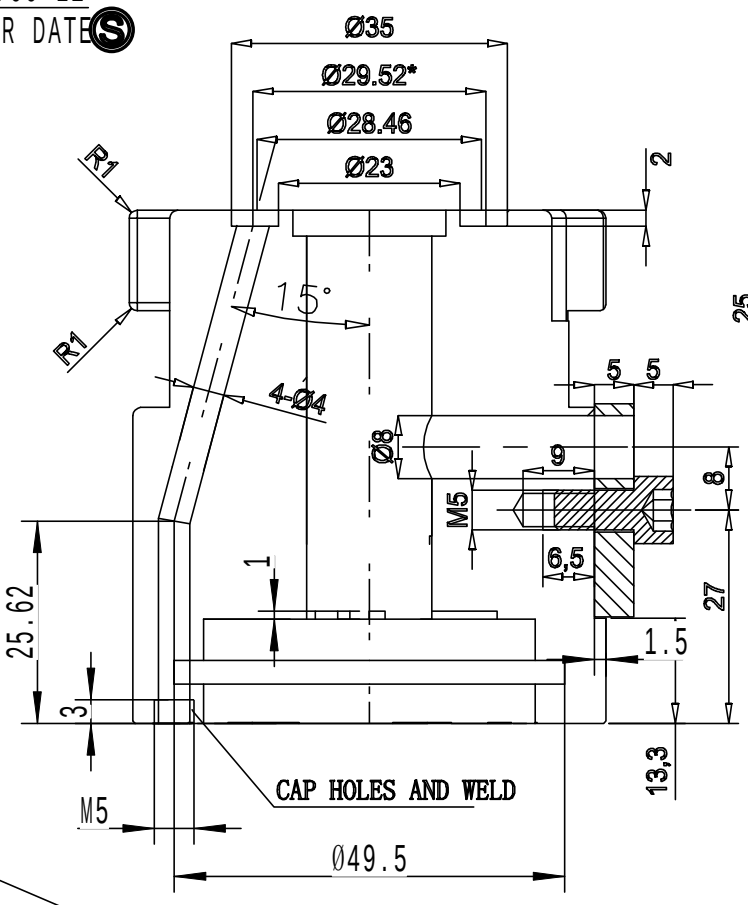

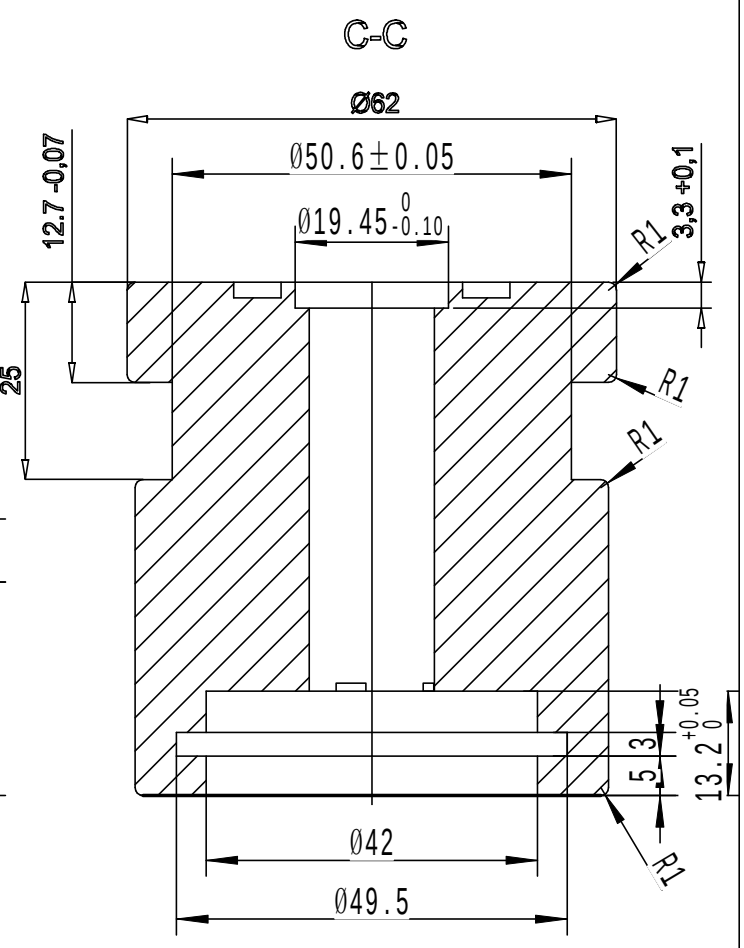

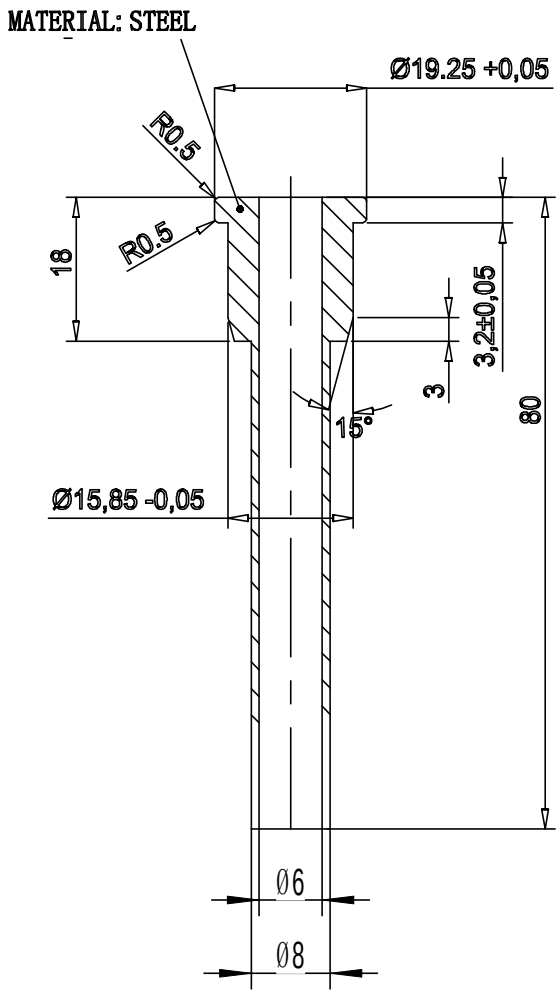

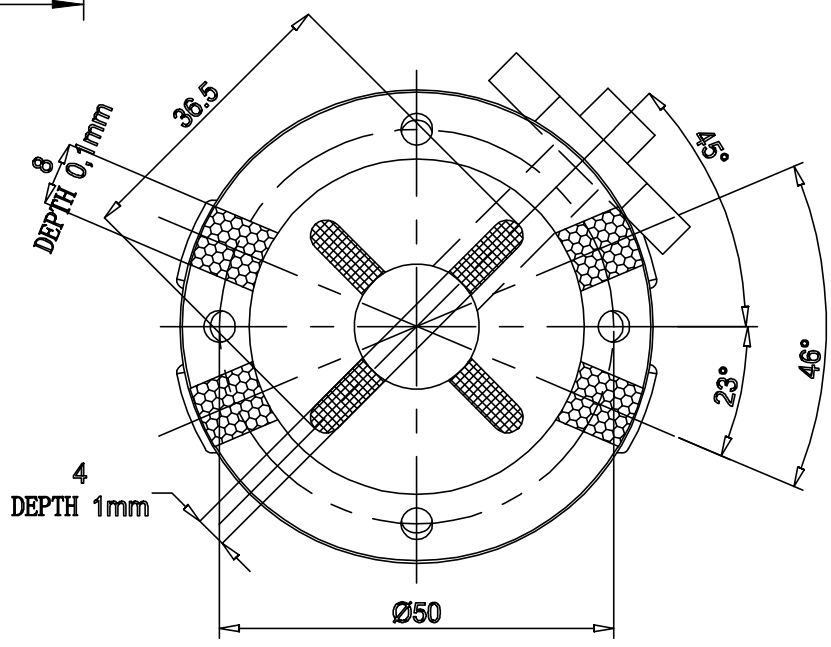

Ind	changes	Name	Date
MATERIAL:	CAST IRONRON+METAL		

CAPACITY	718ml +10 -6	WEIGHT	515g +10 0
SCALE	1:1	DWG.NO	
DRN	DATE /BY 何俊		
REVISION	DATE 2020.09.09 /BY A026-01		
APPROVE	DATE /BY		
REMARK	Dimensions are in mm		
JOB NAME	XXI-KNM-25-700-12		

利用 pdfFactory Pro 测试版本创建的PDF文档 www.pdffactory.com

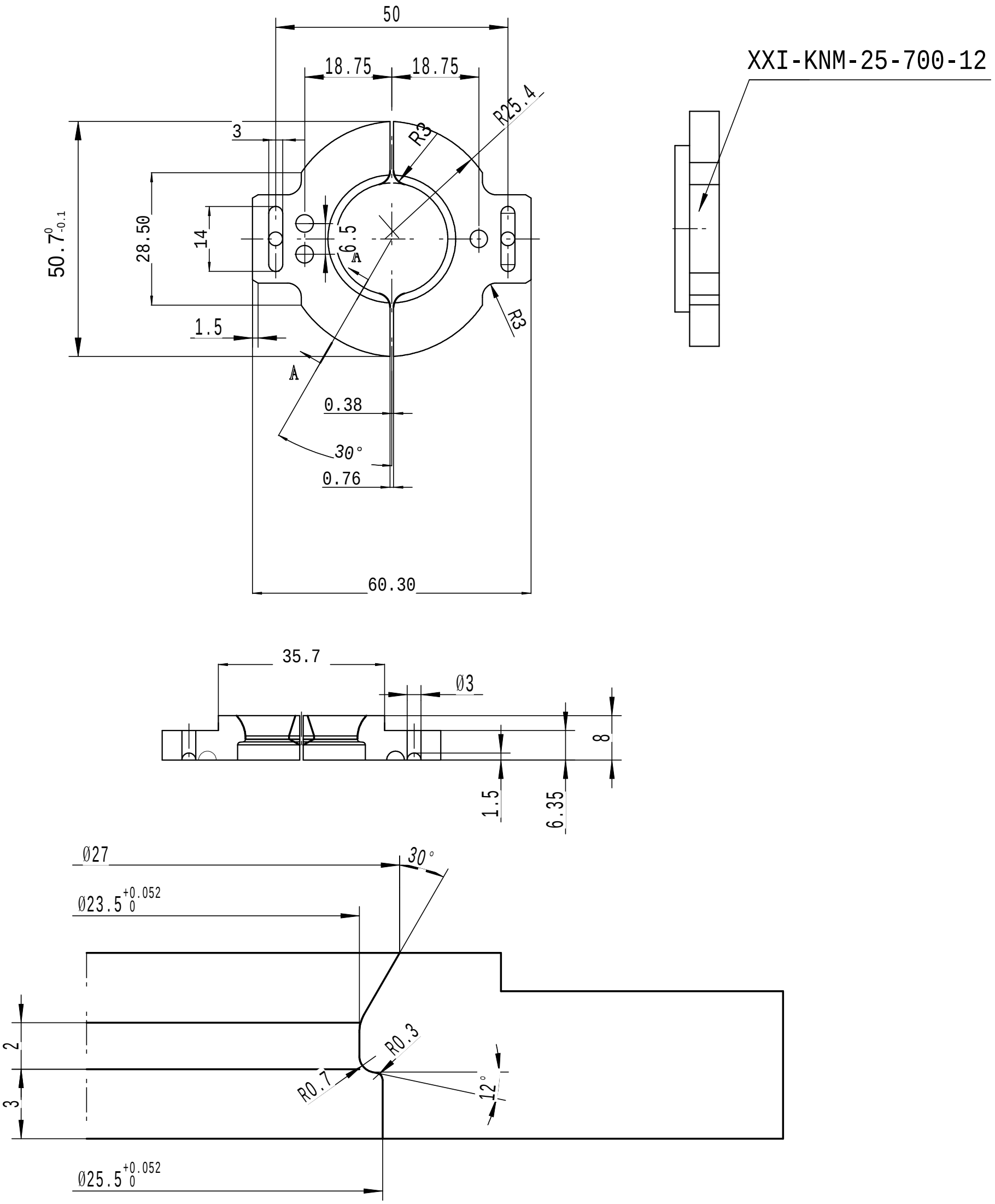

CAPACITY	720ml +10 -6	WEIGHT	520g +10 0
SCALE	1:1	DWG.NO	
DRN	DATE	/BY 何俊	
REVISION	DATE 2020.05.23	/BY A026-01	
APPROVE	DATE	/BY	
REMARK	Dimensions are in mm		
JOB NAME	XXI-KNM-30-1-700-12		

Ind	changes	Name	Date

MATERIAL: GRAPHIT

Sharp edges which are not in contact with glass, rounded with radius R=0.8 mm

Untoleranced dimensions: 0.0= ±0.1mm
0.00= ±0.05mm

利用 pdfFactory Pro 测试版本创建的PDF文档 www.pdffactory.com

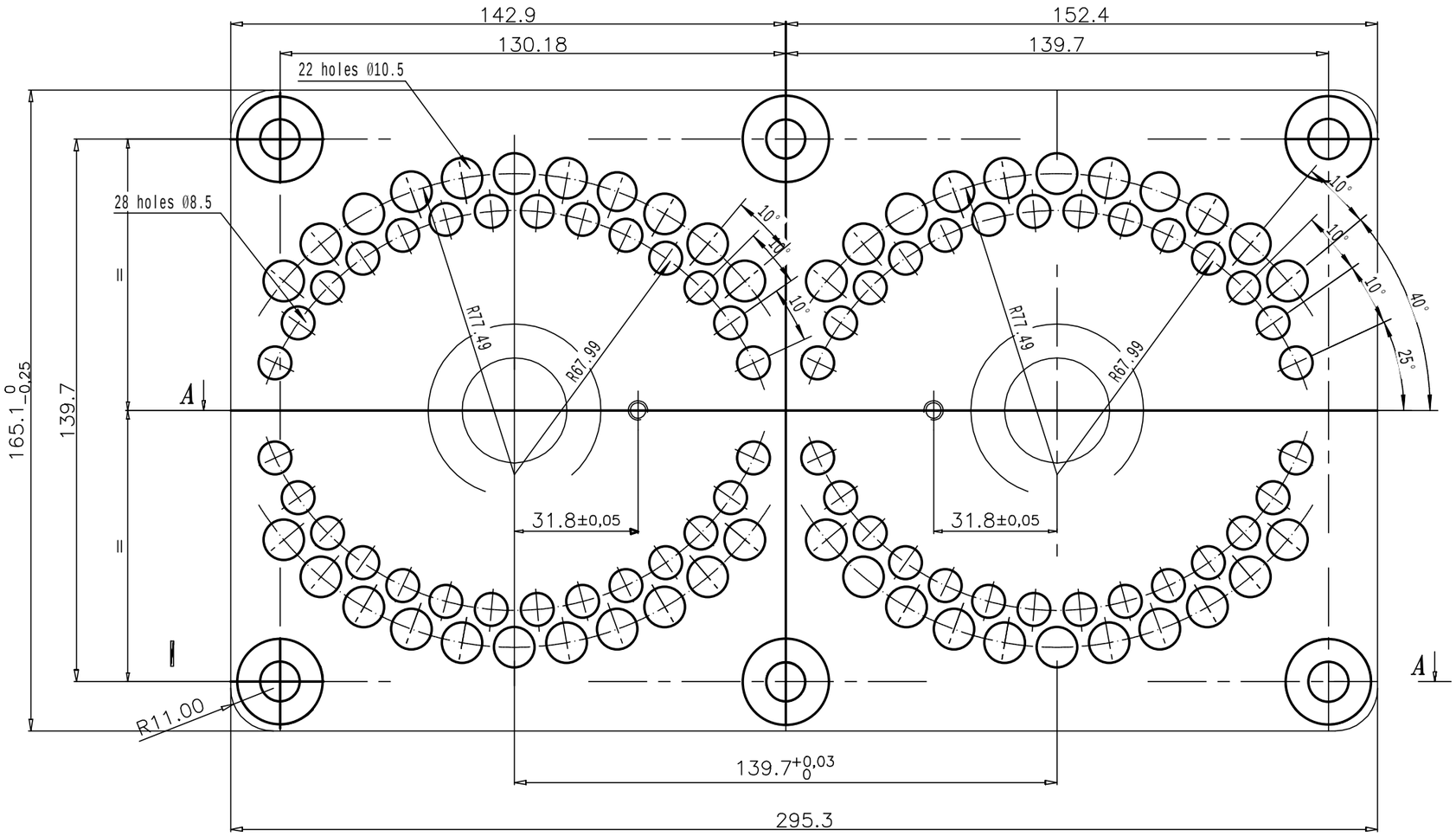

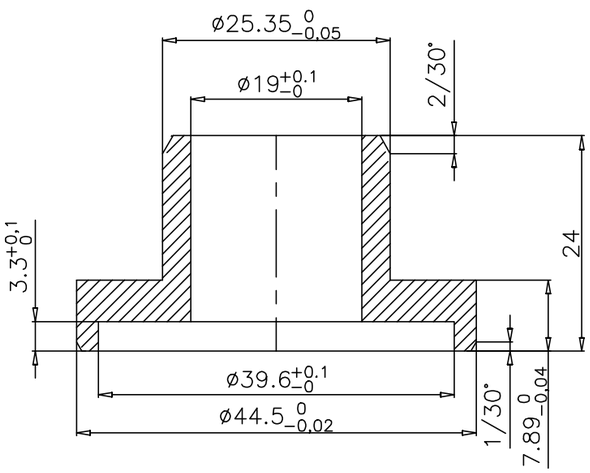

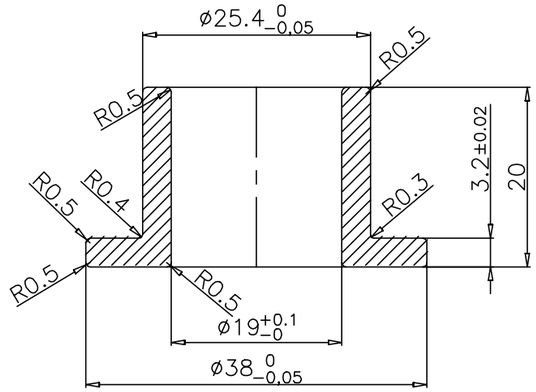

PRESJEK A–A

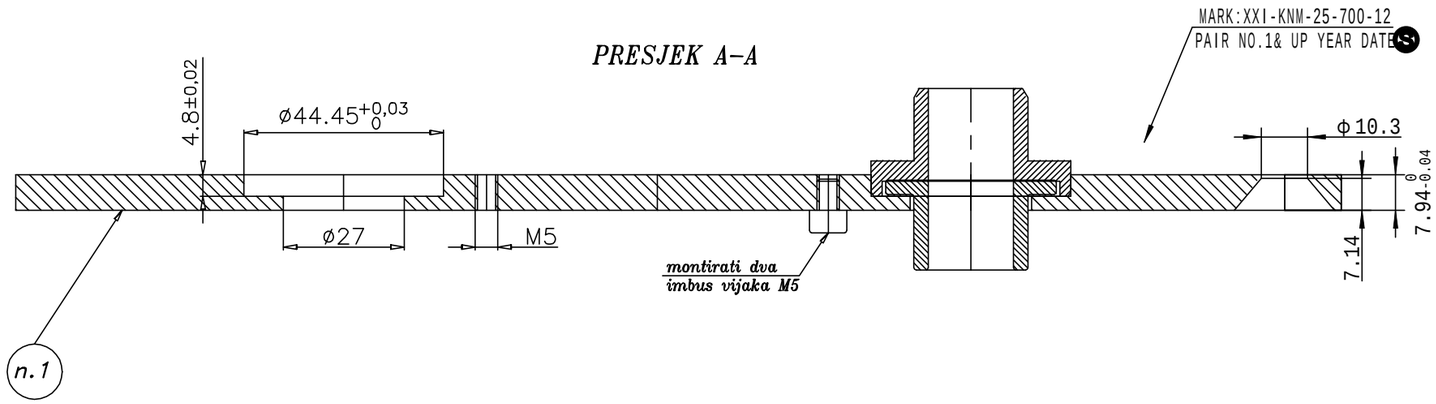

CAPACITY	515ml±10	WEIGHT	435g±10
SCALE	1:1	DWG.NO	
DRN	DATE /BY		
REVISION	DATE 2020.10.16. /BY		
APPROVE	DATE /BY		
REMARK	Dimensions are in mm		
JOB NAME	XXI-B-30-4A-500-22		

Ind	changes	Name	Date
MATERIAL:	Steel		

利用 pdfFactory Pro 测试版本创建的PDF文档 www.pdffactory.com