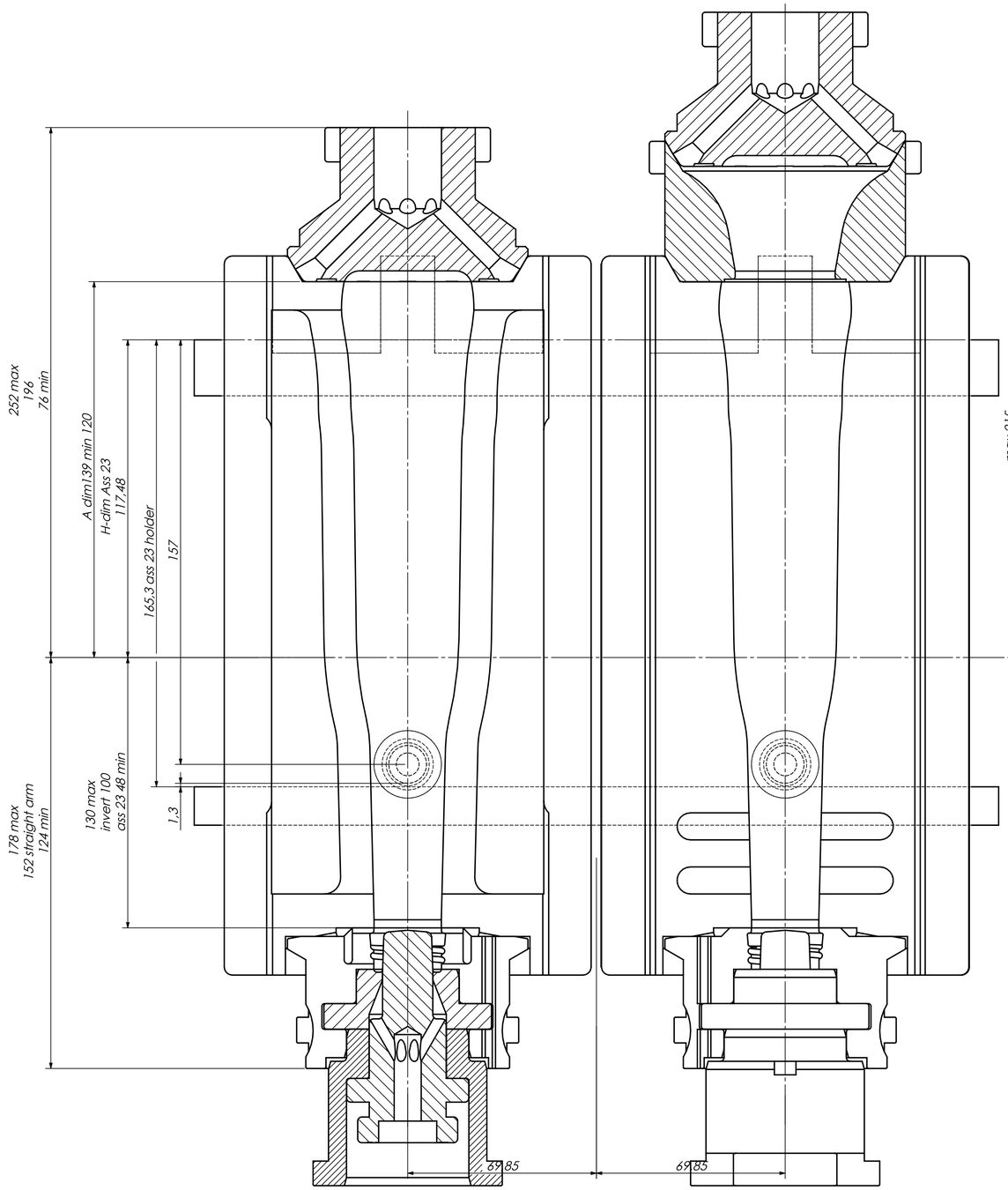

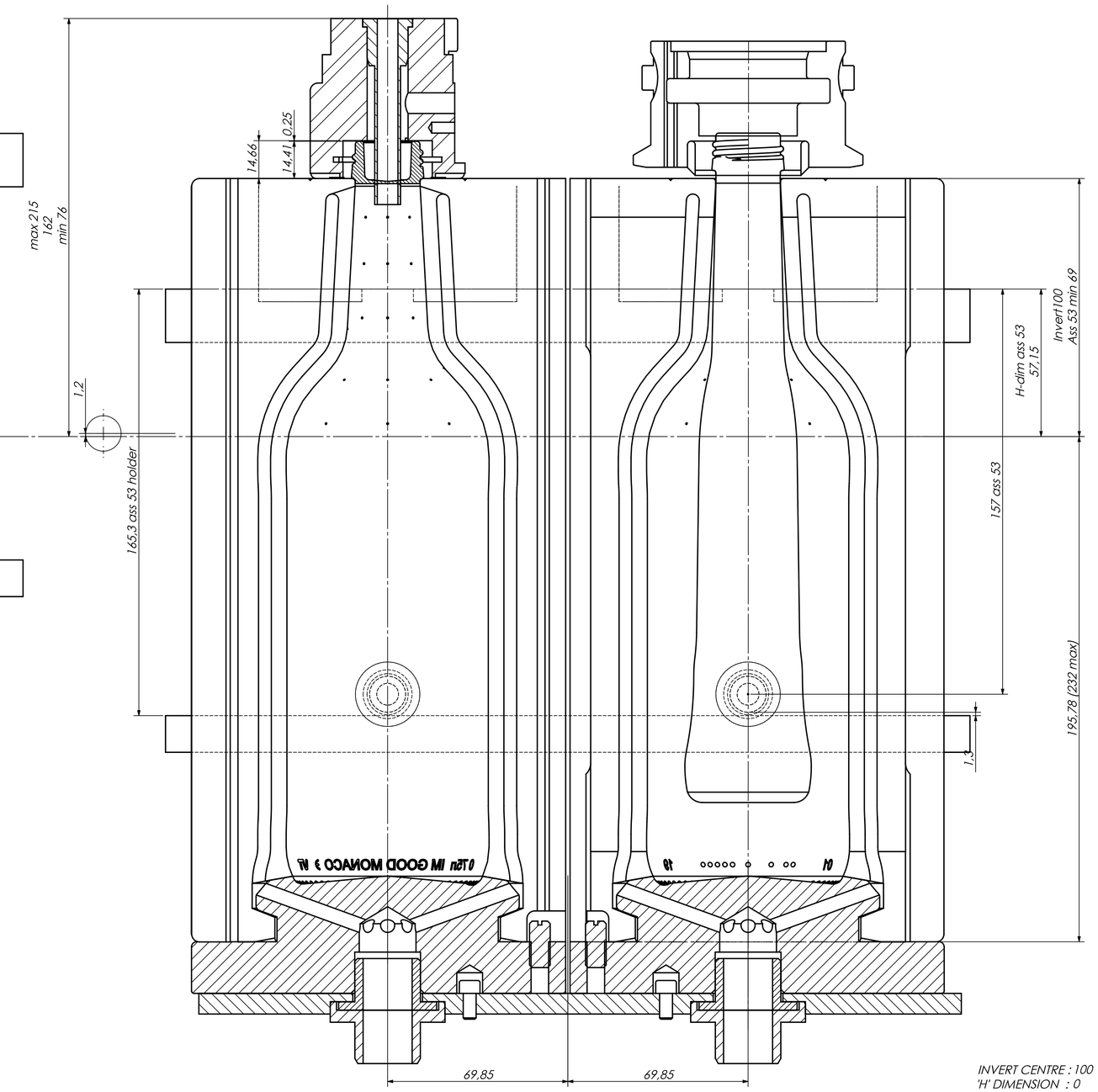

INVERT CENTRE : 100
'H' DIMENSION : 0
ASSEMBLY : 23/53
SCALE : 1:1

BIEBOUW BVBA
INDUSTRIESTRAAT 17
B-8755 Ruiselede

Tel.:+32(0)51 686714
Fax.:+32(0)51 689182
Email: info@biebouw.com

DO NOT SCALE DRAWING IF IN DOUBT ASK

TOLERANCES UNLESS OTHERWISE SPECIFIED
DIMS: 0.0 ± 0.2 DIMS: 0.00 ± 0.05
REMOVE BURRS & SHARP EDGES IN ACCORDANCE TO STANDARD PRACTICE

THIRD ANGLE PROJECTION

SURFACE FINISH
CAST ROUGH FINE POLISH

JOB NAME	X-28MCA-750		
ITEM	MACHINE SETUP	QUANTITY	
CUSTOMER	ELIVOZO	REF. NO.	
ORDER NO.	20190040	DRAWN BY	JBB
MATERIAL		CHECKED BY	
MACHINE	BB DG 5 1/2	DATE	23/05/2019

Rev A Weight was 480gr

REVISIONS

DRG No: BIEB830-03 A