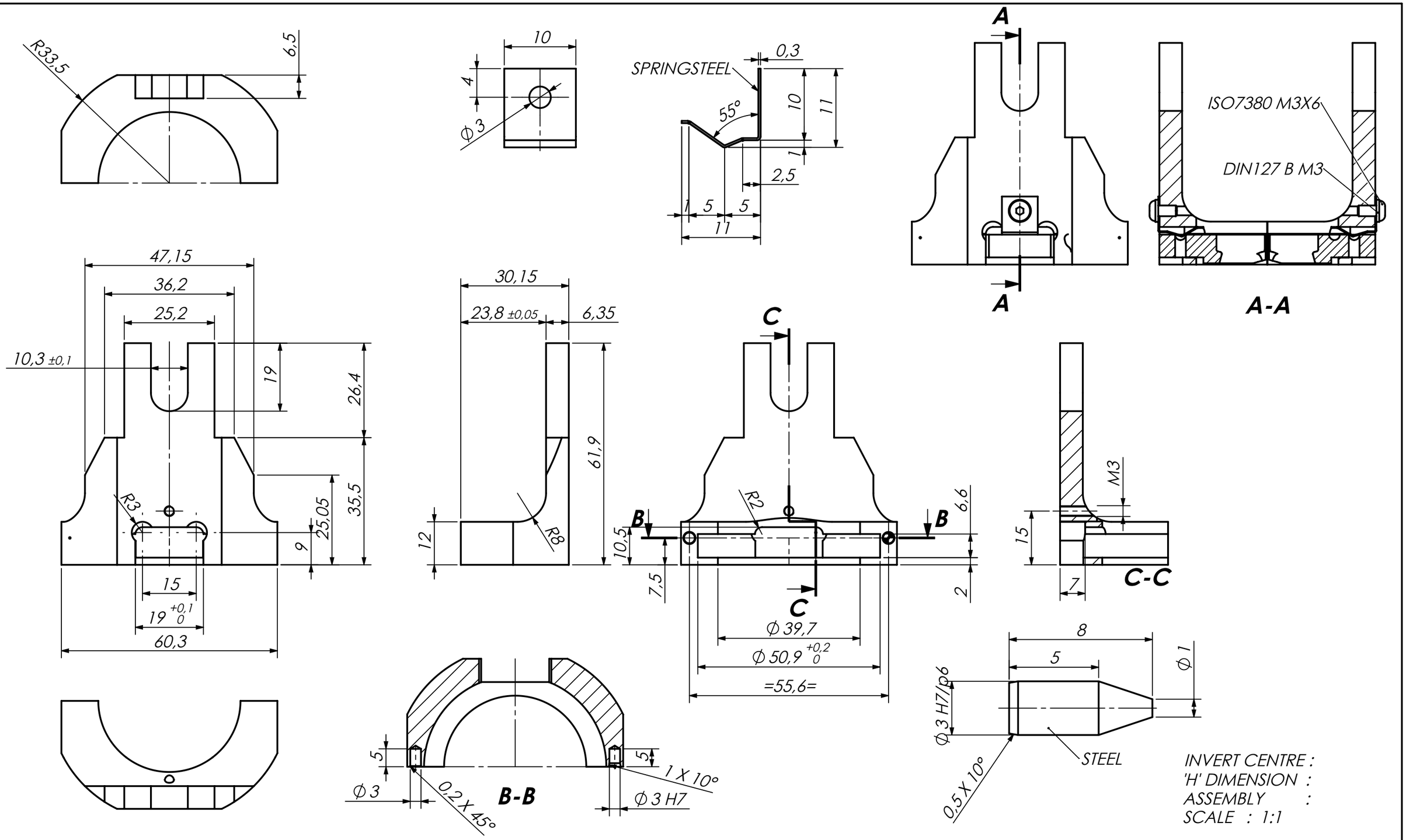

BIEBOUW BVBA
INDUSTRIESTRAAT 17
B-8755 Ruiselede

Tel.:+32(0)51 686714
Fax.:+32(0)51 689182
Email: info@biebouw.com

DO NOT SCALE DRAWING
IF IN DOUBT ASK

TOLERANCES UNLESS OTHERWISE SPECIFIED
DIMS: 0.0 ± 0.2 DIMS: 0.00 ± 0.05
REMOVE BURRS & SHARP EDGES IN
ACCORDANCE TO STANDARD PRACTICE

THIRD ANGLE PROJECTION

SURFACE FINISH
CAST: ROUGH FINE: POLISH:

JOB NAME	X-28MCA-750		
ITEM	TAKE OUT TONGUE HOLDER	QUANTITY	-
CUSTOMER	ELIVOZO	REF. NO.	
ORDER NO.	20190040	DRAWN BY	JBB
MATERIAL	Steel	CHECKED BY	
MACHINE	BB DG 5 1/2	DATE	11-3-2019

REVISIONS

DRG No: BIEB830-26