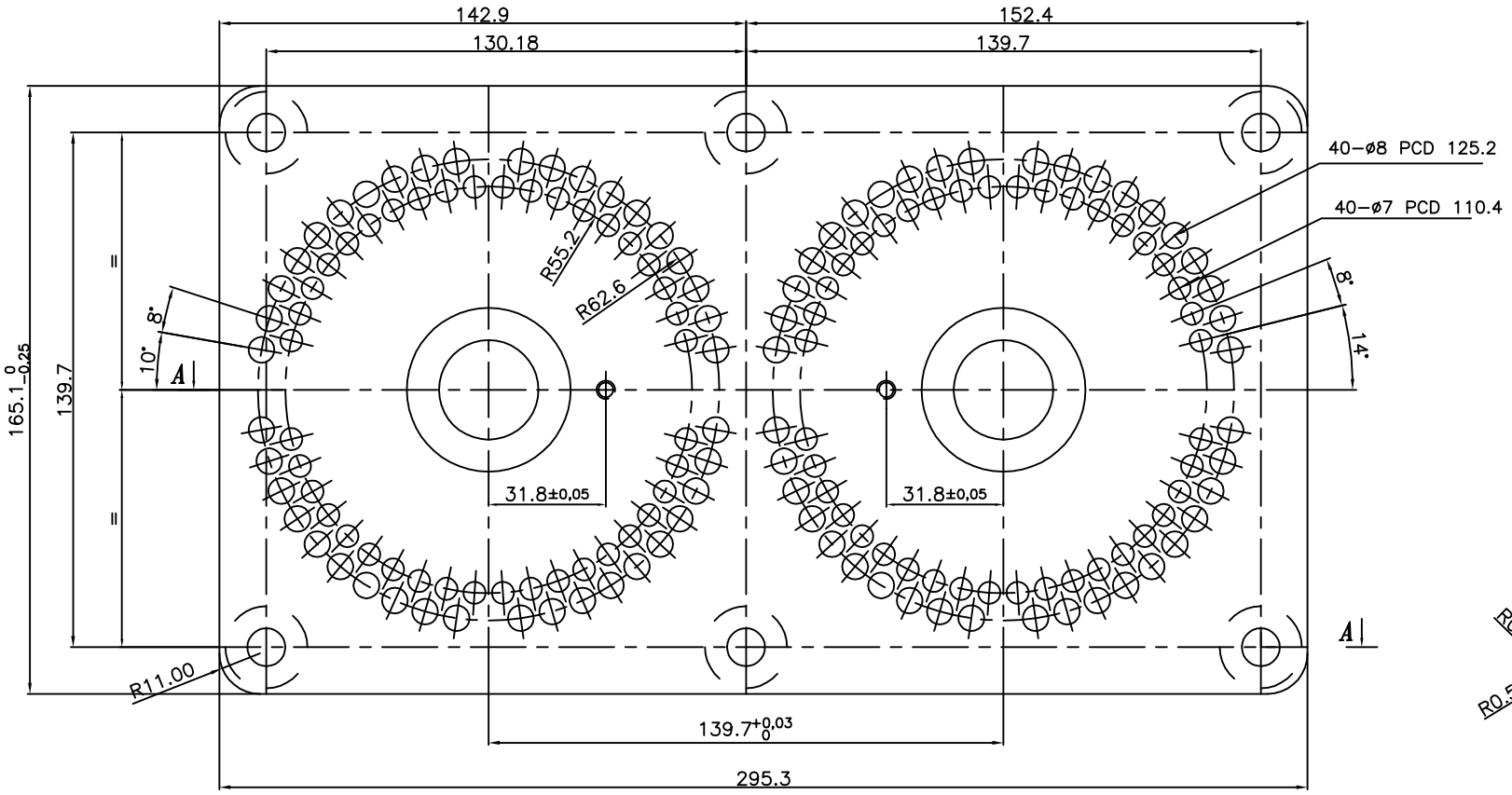

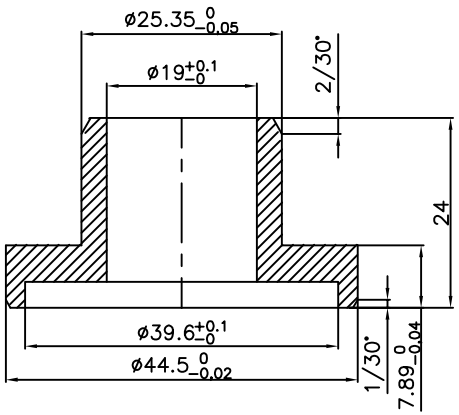

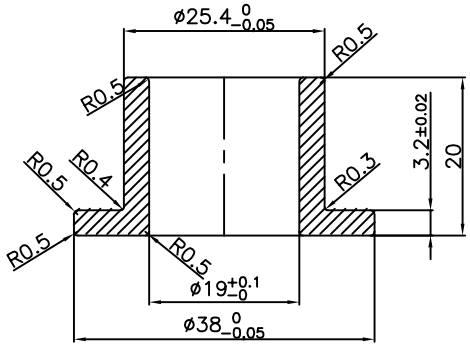

PRESJEK A−A

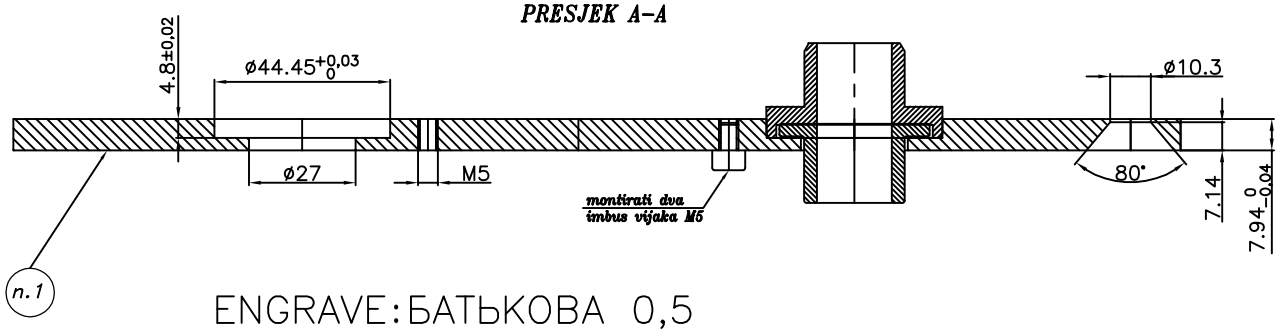

ENGRAVE: БАТЬКОВА 0,5
MOULD NO.
Ⓢ

XXI−B−30−4Б−500−14 DISTRIBUTOR PLATE		
SCALE 1:1	DRAWING NO. XXI−B−30−4Б−500−14 −DP−A1	
DRAW	CHECKED	APPROVED
10/10/2019		
MATERIAL	STEEL	