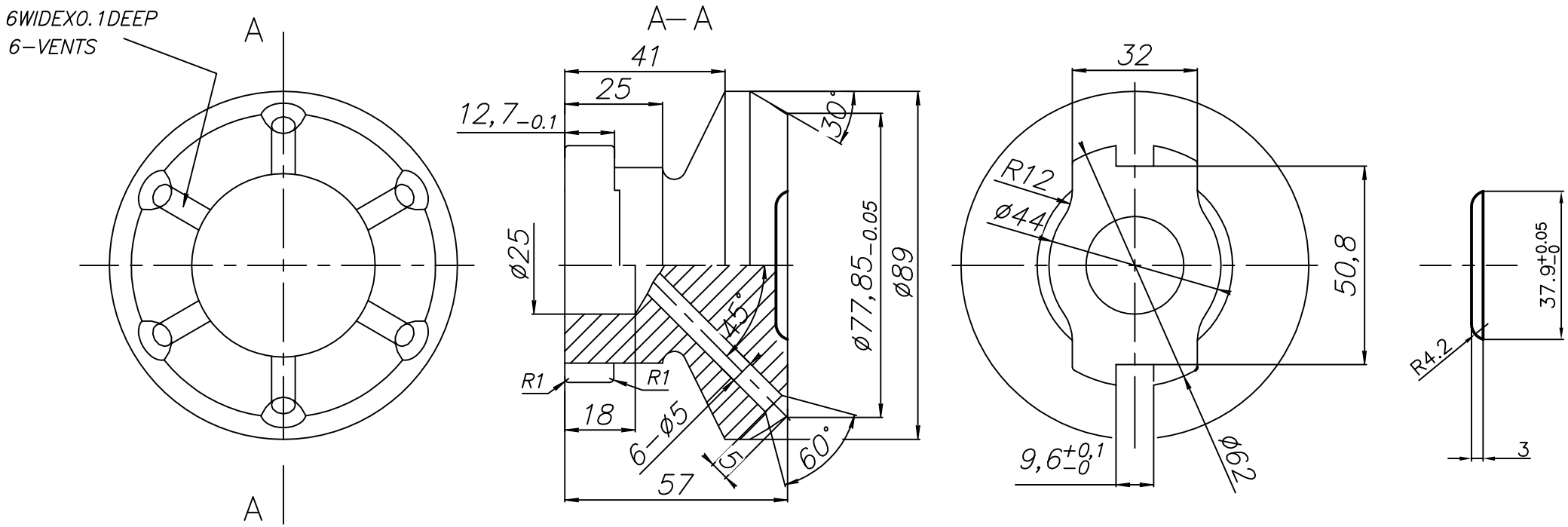

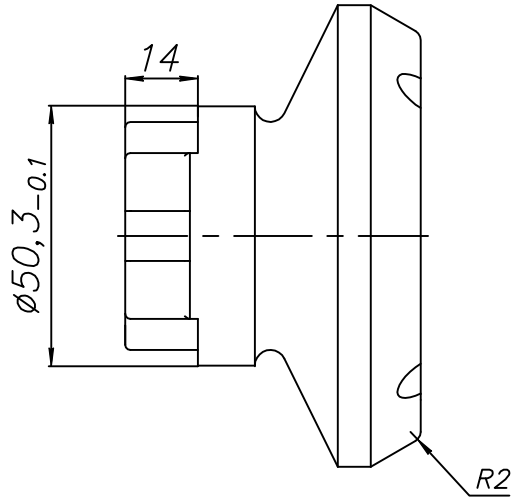

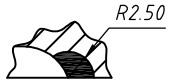

COLMONOY DETAILS
SCALE 2:1

ENGRAVE: KALINA 500
MOULD NO.

KALINA 500 BAFFLE		
SCALE 1:1	DRAWING NO. KALINA 500 -BA-A1	
DRAW	CHECKED	APPROVED
11/08/2017		
MATERIAL	CAST IRON	
QUANTITY	26	