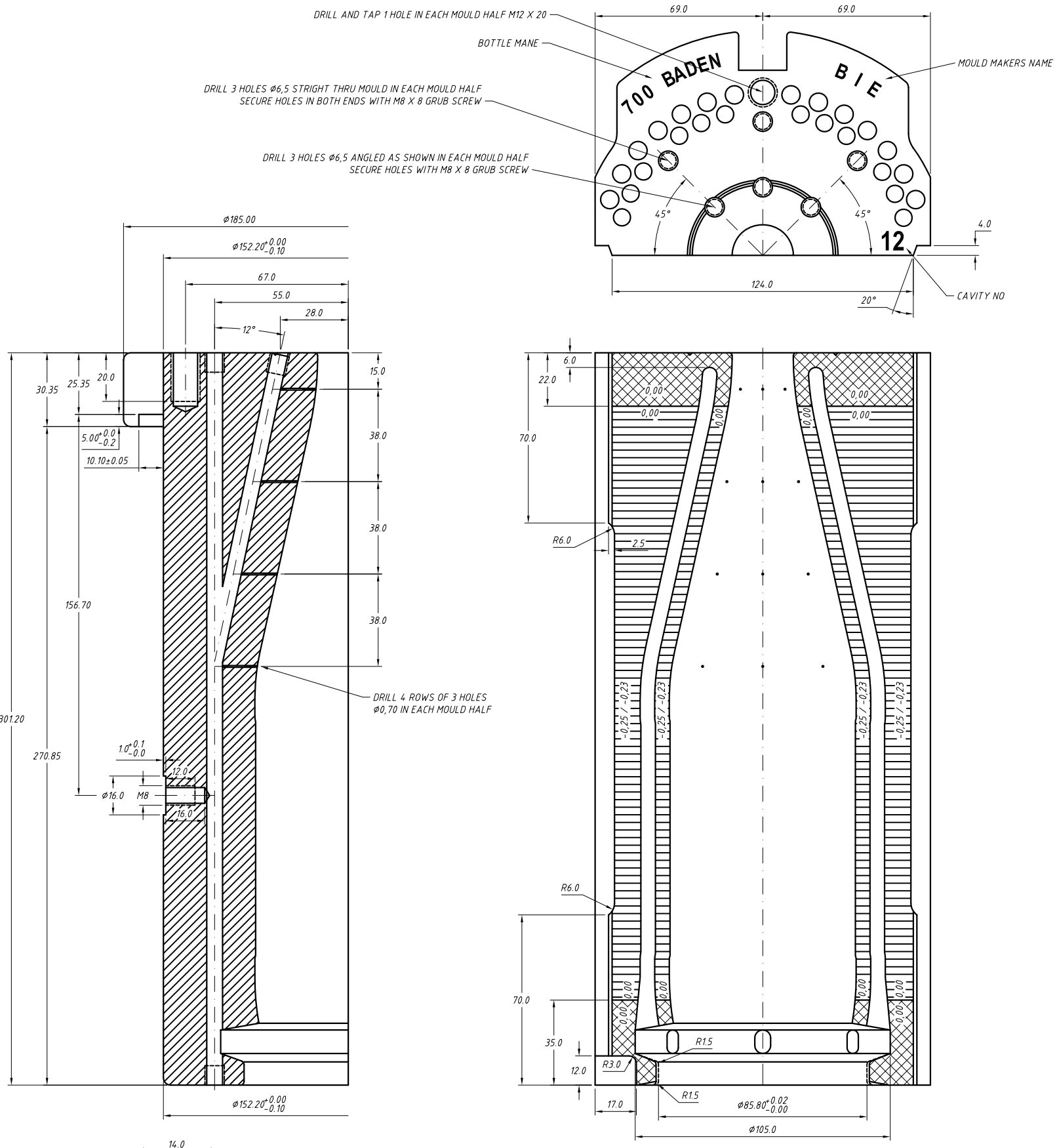

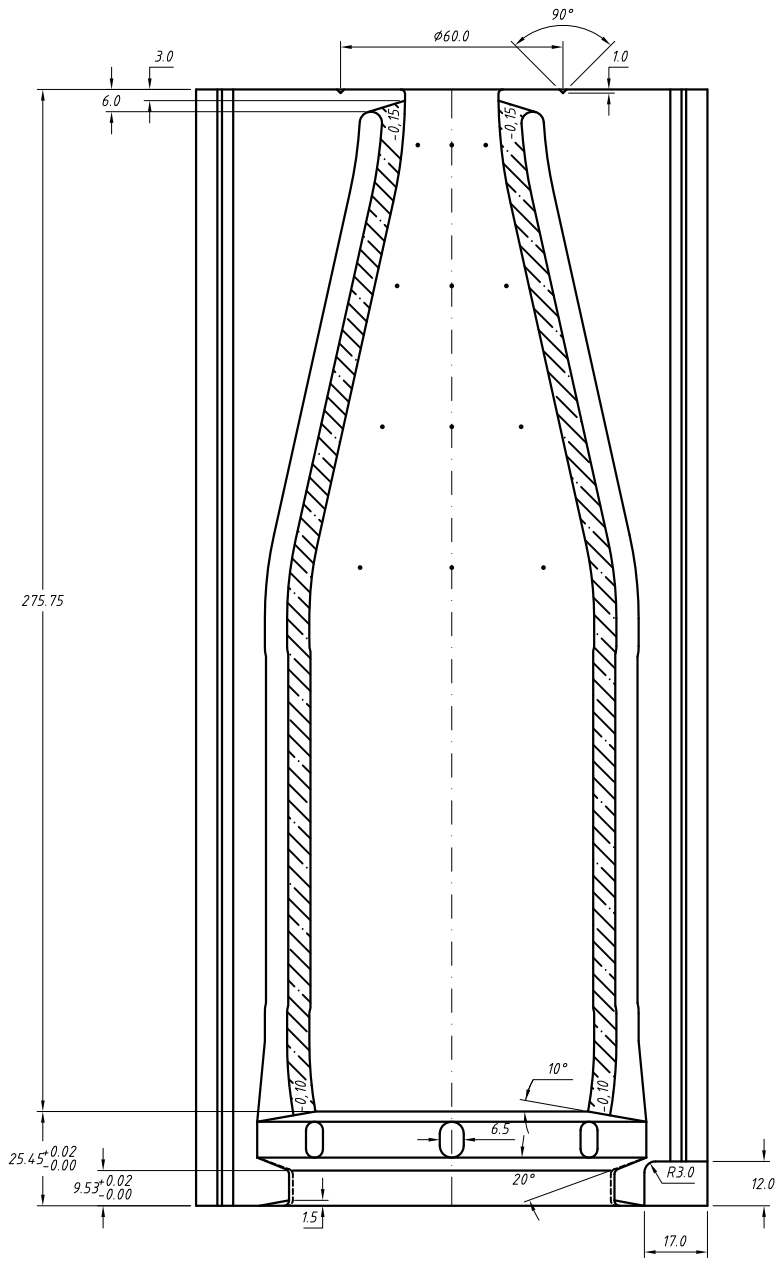

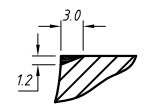

Metal joint

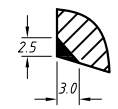

Metal bottom

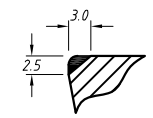

Metal neck

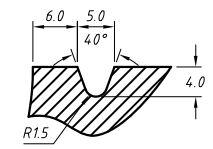

TYPICAL VIEW THRU VACUUM GROOVE
SCALE 2 - 1

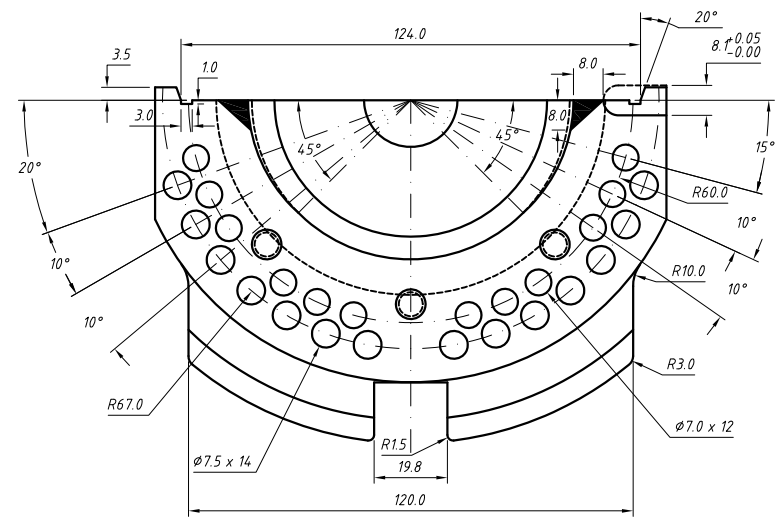

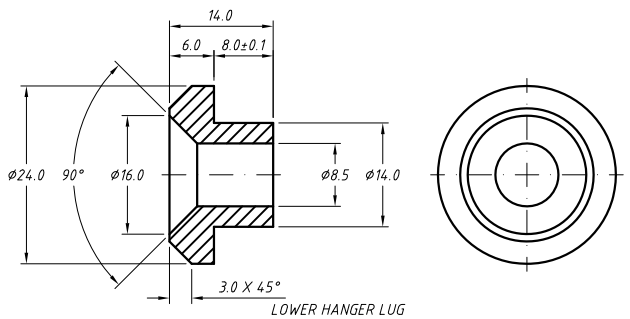

LOWER HANGER LUG
MATERIAL: STEEL
SCALE 2 - 1

INVERT: 82,50mm
H-DIM: 54,15mm
HOLDER: 53

© BIEBOUW B.V.B.A.
Industriestraat 17
B-8755 Ruiselede
Belgium
Tel.: +32 (0)51 686714
Fax.: +32 (0)51 689182
Email: info@biebouw.com

DO NOT SCALE DRAWING IF IN DOUBT ASK
TOLERANCES UNLESS OTHERWISE SPECIFIED DIMS: 0.0 ± 0.2 DIMS: 0.00 ± 0.05
REMOVE BURRS & SHARP EDGES IN ACCORDANCE TO STANDARD PRACTICE
THIRD ANGLE PROJECTION
SURFACE FINISH CAST: ROUGH: FINE: POLISH:

JOB NAME	700ml BADEN		
ITEM	BLOW MOULD	QUANTITY	
CUSTOMER	SYSTEMPCK	REF. NO.	
ORDER NO.	20120352	DRAWN BY	F.KARLSEN
MATERIAL	SEE ORDER	CHECKED BY	
MACHINE	EM IS DG BB 5,5"	DATE	14.02.2012

REVISIONS

DRG. NO. FKE1895 - 05