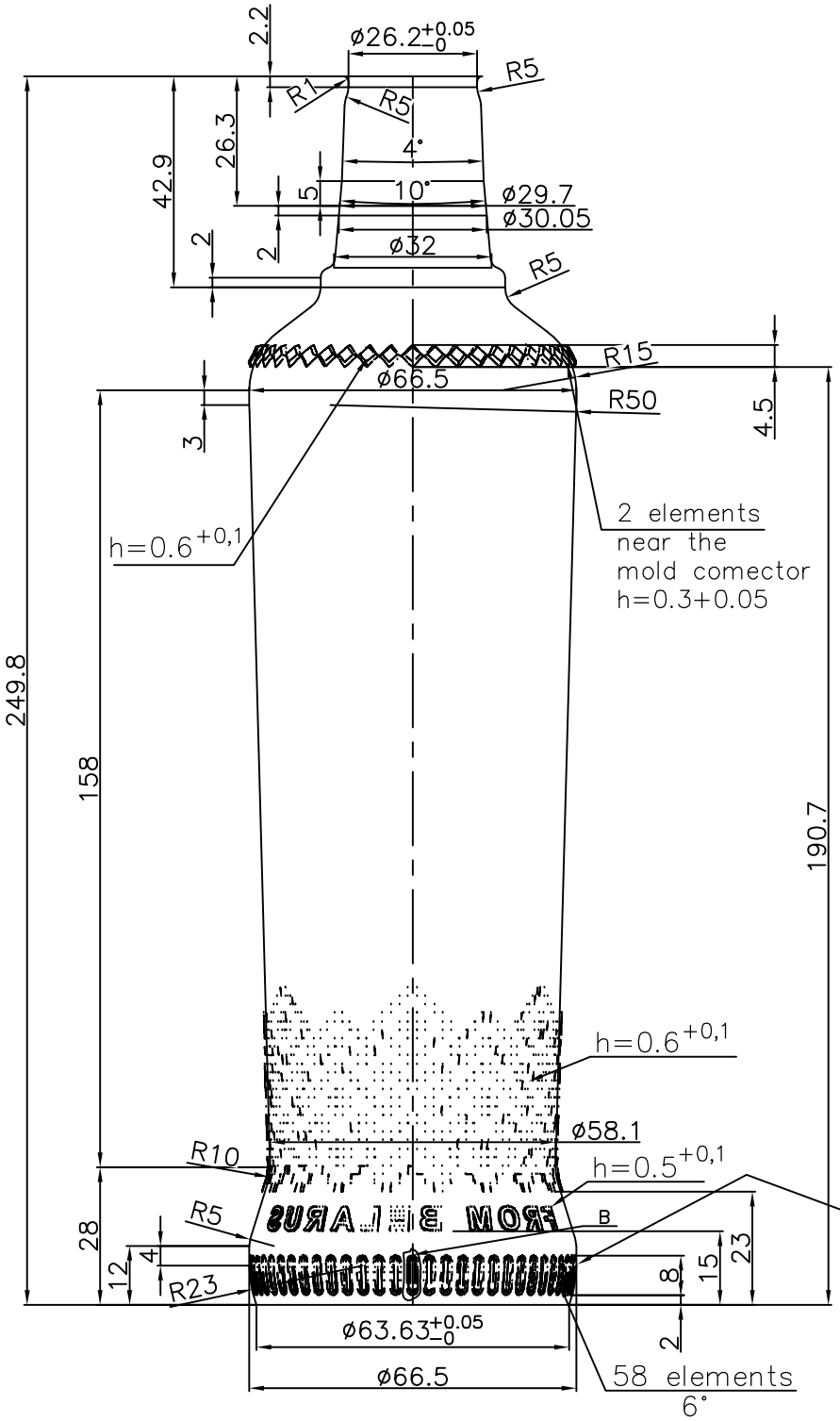

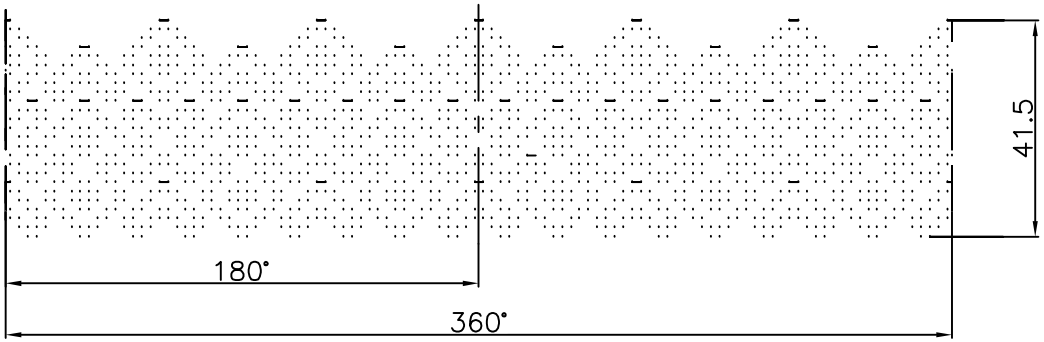

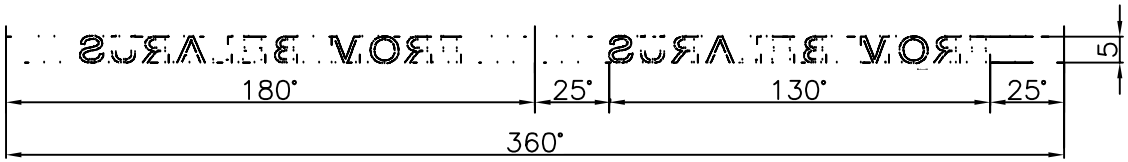

B (2:1)

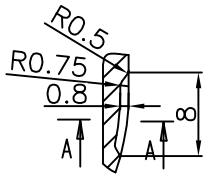

A–A (2:1)

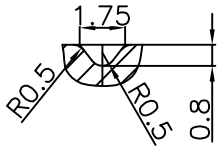

MLD & BTM DISPL. 662±1.5ml

XXI–B–30–4Б–500–14 BLOW CAVITY		
WEIGHT	380±10g	
BRIMFUL CAPACITY	520±10ml	
FILL POINT CAPACITY	500±10ml	
SCALE 1:1	DRAWING NO. XXI–B–30–4Б–500–14 –FMC–A1	
DRAW	CHECKED	APPROVED
12/12/2019		