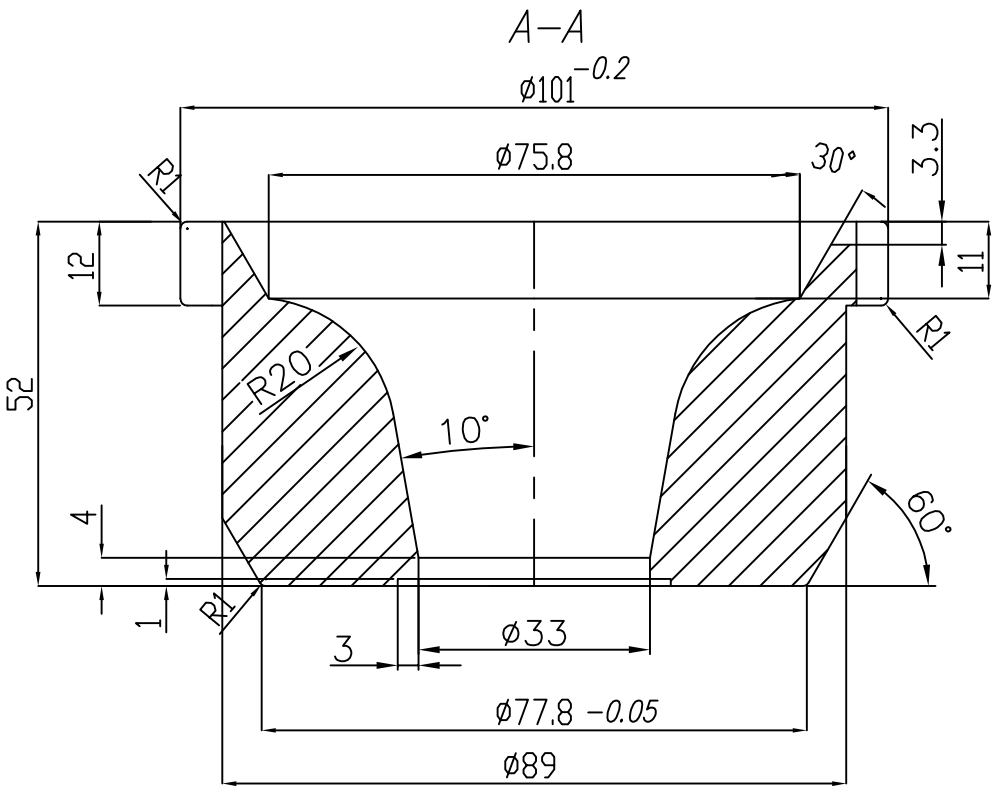

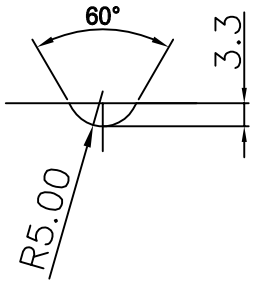

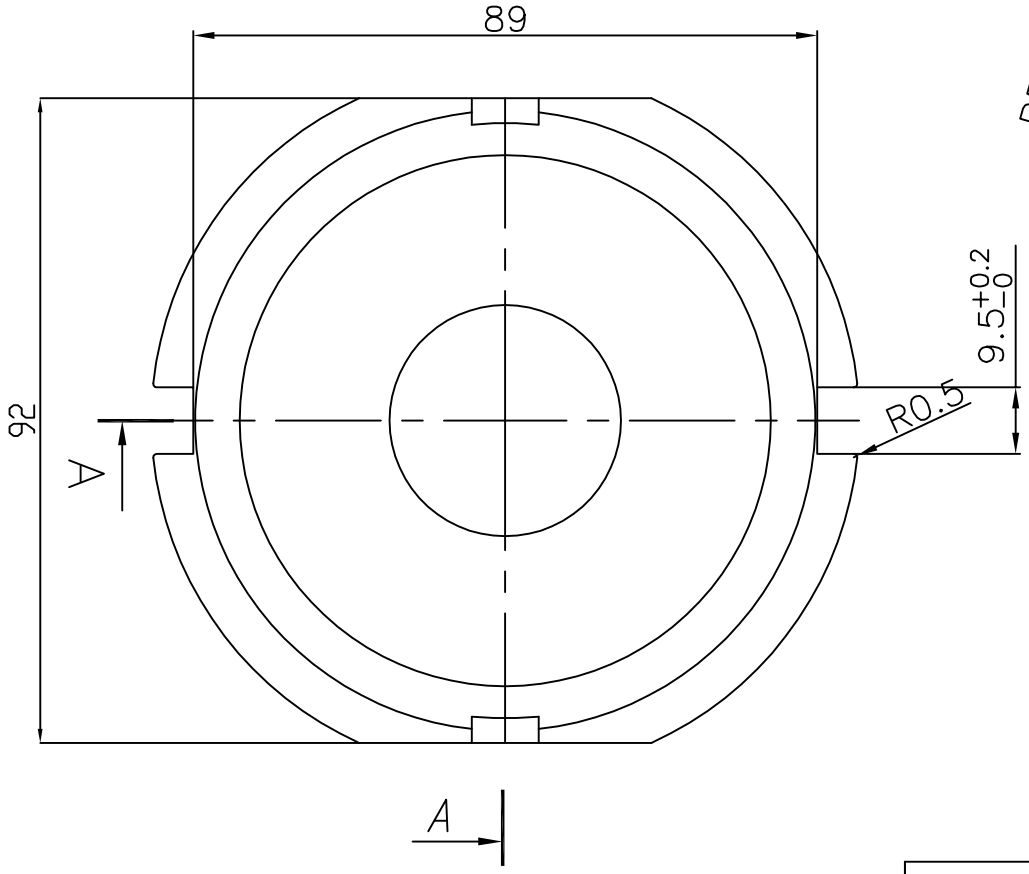

ENGRAVE: KEPIL 500
MOULD NO.

KEPIL 500 FUNNEL		
SCALE 1:1	DRAWING NO. KEPIL 500 –FU–A1	
DRAW	CHECKED	APPROVED
25/10/2017		
MATERIAL	CAST IRON	
QUANTITY		