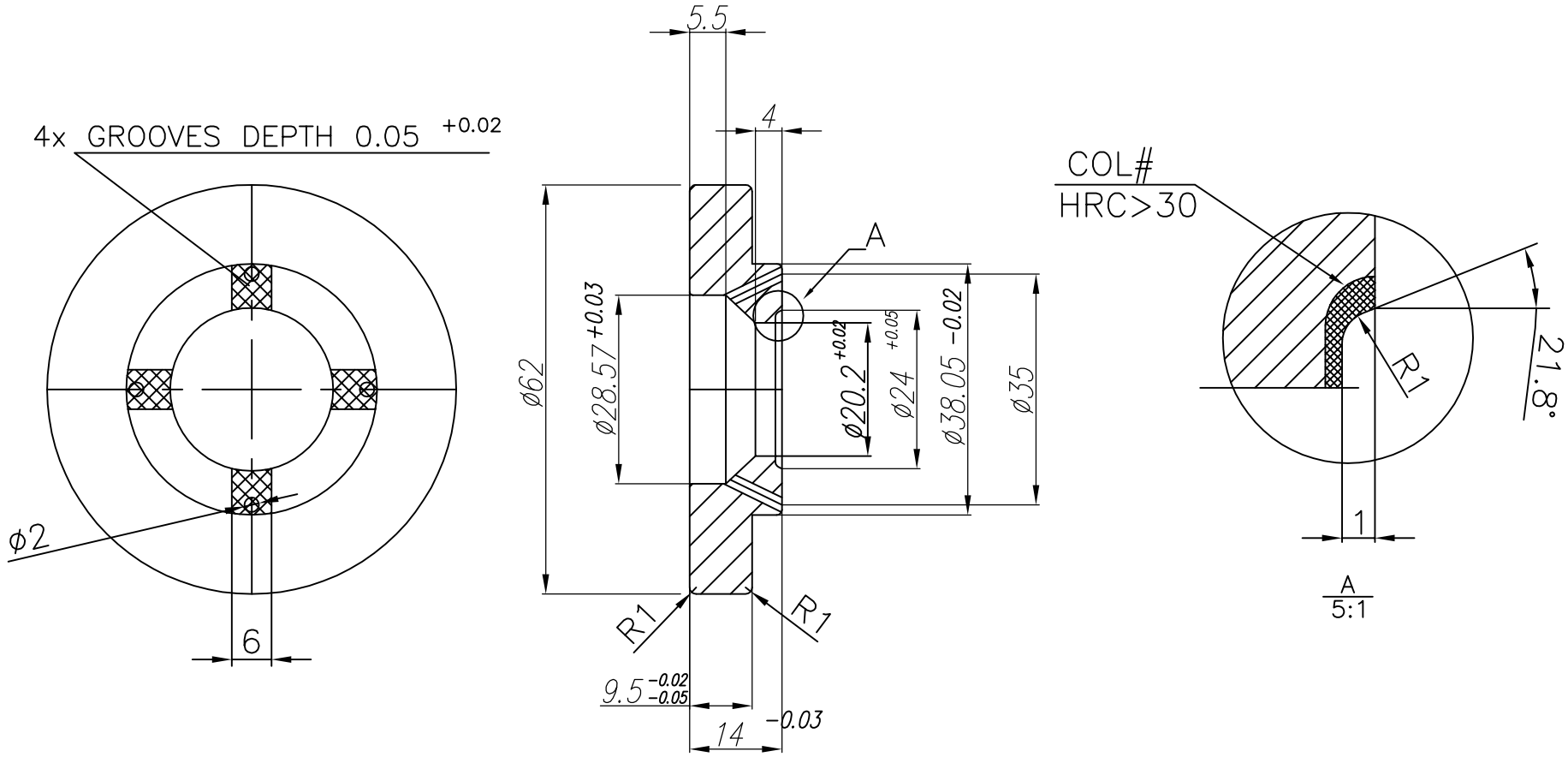

ENGRAVE: XXI−KПM−26−4−500−10
MOULD NO.

Ⓢ

XXI−KПM−26−4−500−10 GUIDE PLATE		
SCALE 1:1	DRAWING NO. XXI−KПM−26−4−500−10 −GP−A1	
DRAW	CHECKED	APPROVED
10/10/2019		
MATERIAL	CAST IRON	