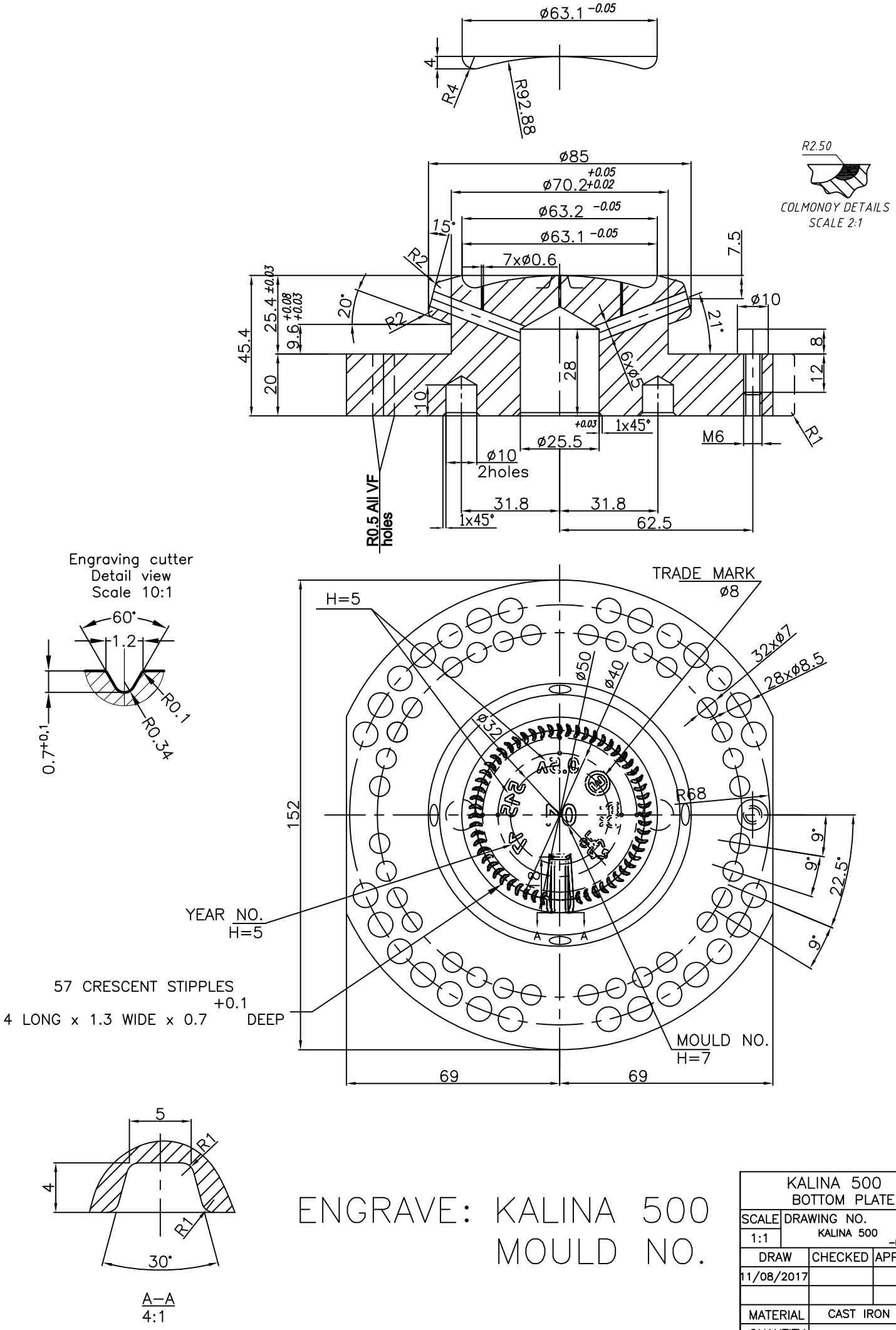
ø63.1 -0.05
4
R4
R92.88
R2.50
COLMONOY DETAILS
SCALE 2:1
ø85
ø70.2 +0.05 +0.02
ø63.2 -0.05
ø63.1 -0.05
7xø0.6
15°
R2
7.5
ø10
21°
20°
R2
25.4 ±0.03
9.6 +0.08 +0.03
45.4
20
28
6xø5
8
12
10
+0.03
1x45°
ø25.5
M6
R1
ø10
2holes
31.8
31.8
1x45°
62.5
R0.5 All VF holes
Engraving cutter
Detail view
Scale 10:1
60°
1.2
R0.1
R0.34
0.7+0.1
TRADE MARK
ø8
H=5
32xø7
28xø8.5
ø50
ø40
ø32
R68
152
9°
9°
22.5°
9°
YEAR NO.
H=5
57 CRESCENT STIPPLES
4 LONG x 1.3 WIDE x 0.7 +0.1 DEEP
MOULD NO.
H=7
69
69
5
R1
4
R1
30°
A–A
4:1
ENGRAVE: KALINA 500
MOULD NO.
KALINA 500
BOTTOM PLATE
SCALE
1:1
DRAWING NO.
KALINA 500
–BP–A2
DRAW
CHECKED
APPROVED
11/08/2017
MATERIAL
CAST IRON
QUANTITY