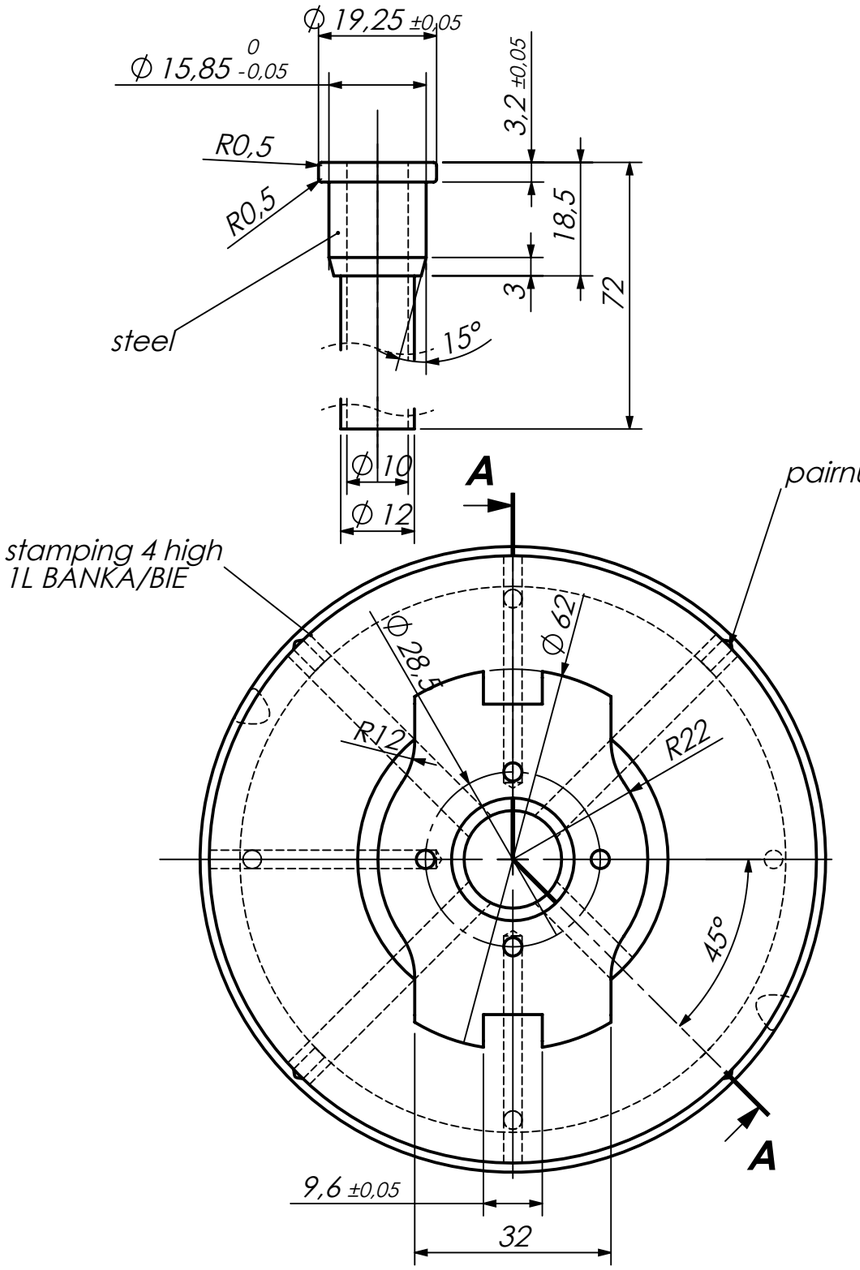

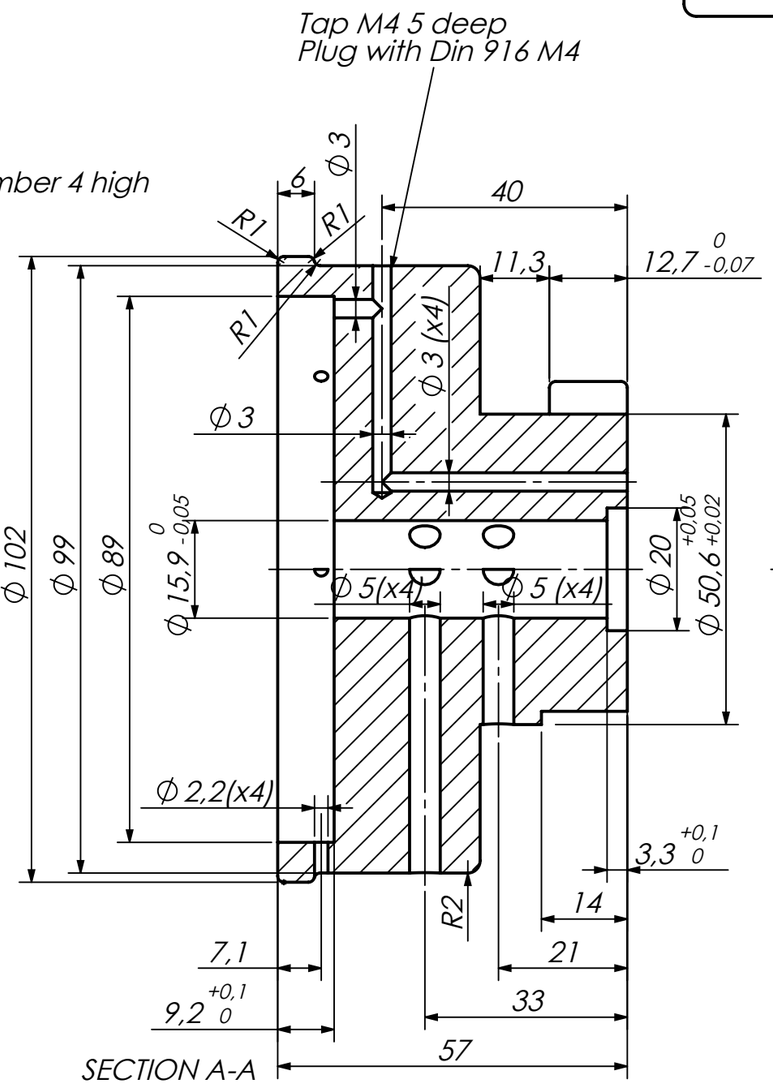

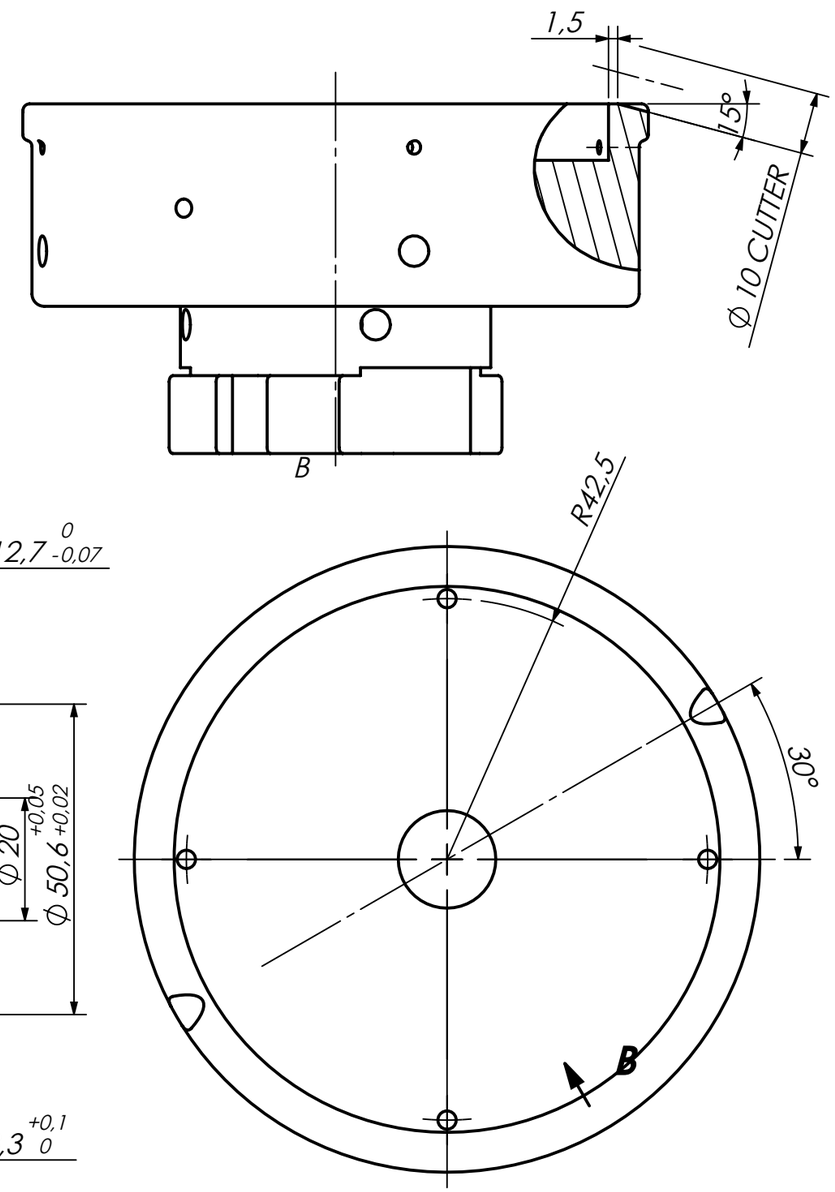

INVERT CENTRE :
'H' DIMENSION :
ASSEMBLY : -
SCALE : 1:1

BIEBOUW BVBA
INDUSTRIESTRAAT 17
B-8755 Ruiselede

Tel.:+32(0)51 686714
Fax.:+32(0)51 689182
Email: info@biebouw.com

DO NOT SCALE DRAWING
IF IN DOUBT ASK

TOLERANCES UNLESS OTHERWISE SPECIFIED
DIMS: 0.0 ± 0.2 DIMS: 0.00 ± 0.05
REMOVE BURRS & SHARP EDGES IN
ACCORDANCE TO STANDARD PRACTICE

THIRD ANGLE PROJECTION

SURFACE FINISH
CAST: ROUGH: FINE: POLISH:

JOB NAME	1000ml BANKA JAR		
ITEM	BLOWHEAD	QUANTITY	24
CUSTOMER	Raudkull	REF. NO.	
ORDER NO.	-	DRAWN BY	JBB
MATERIAL	Cast iron type 1	CHECKED BY	
MACHINE	PB DG 5"1/2	DATE	9/04/2014

REVISIONS

DRG No: BIEB511-23