6.3 (√)

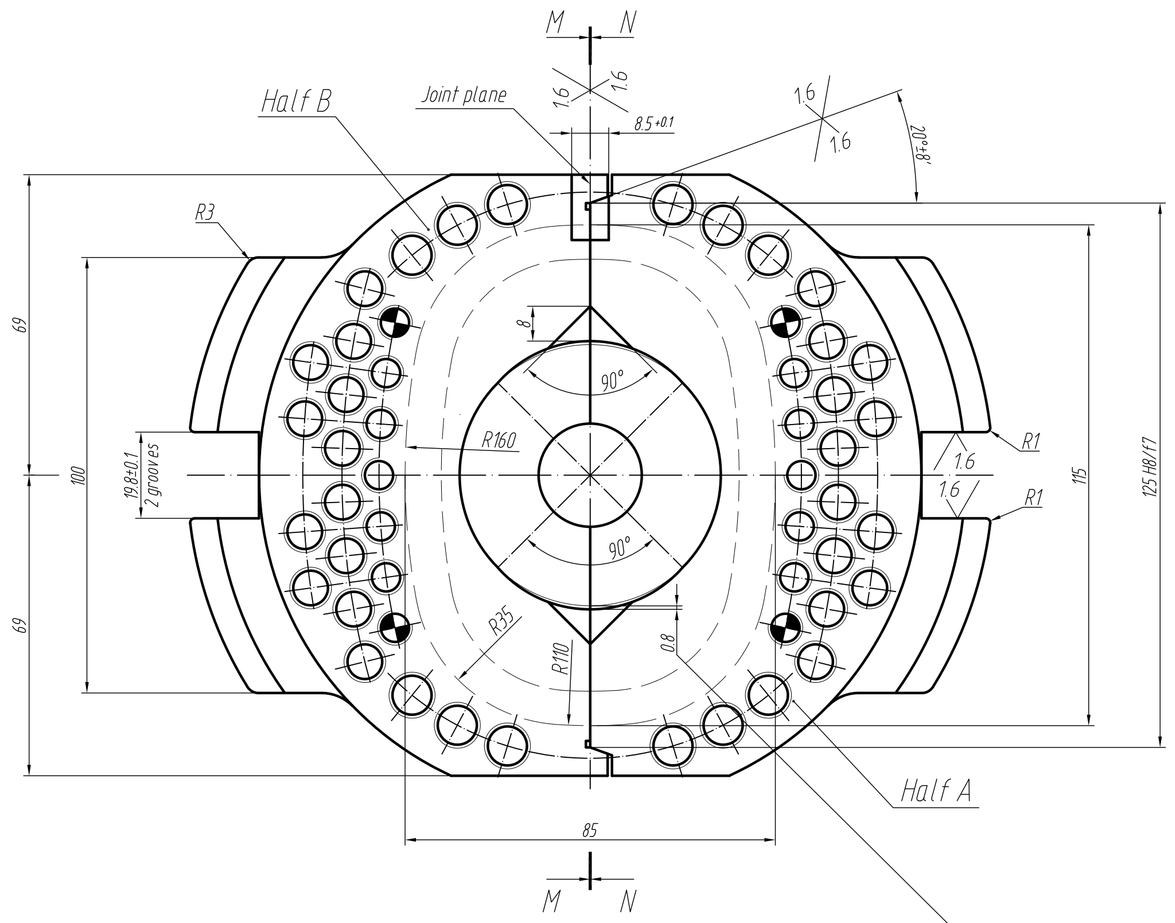

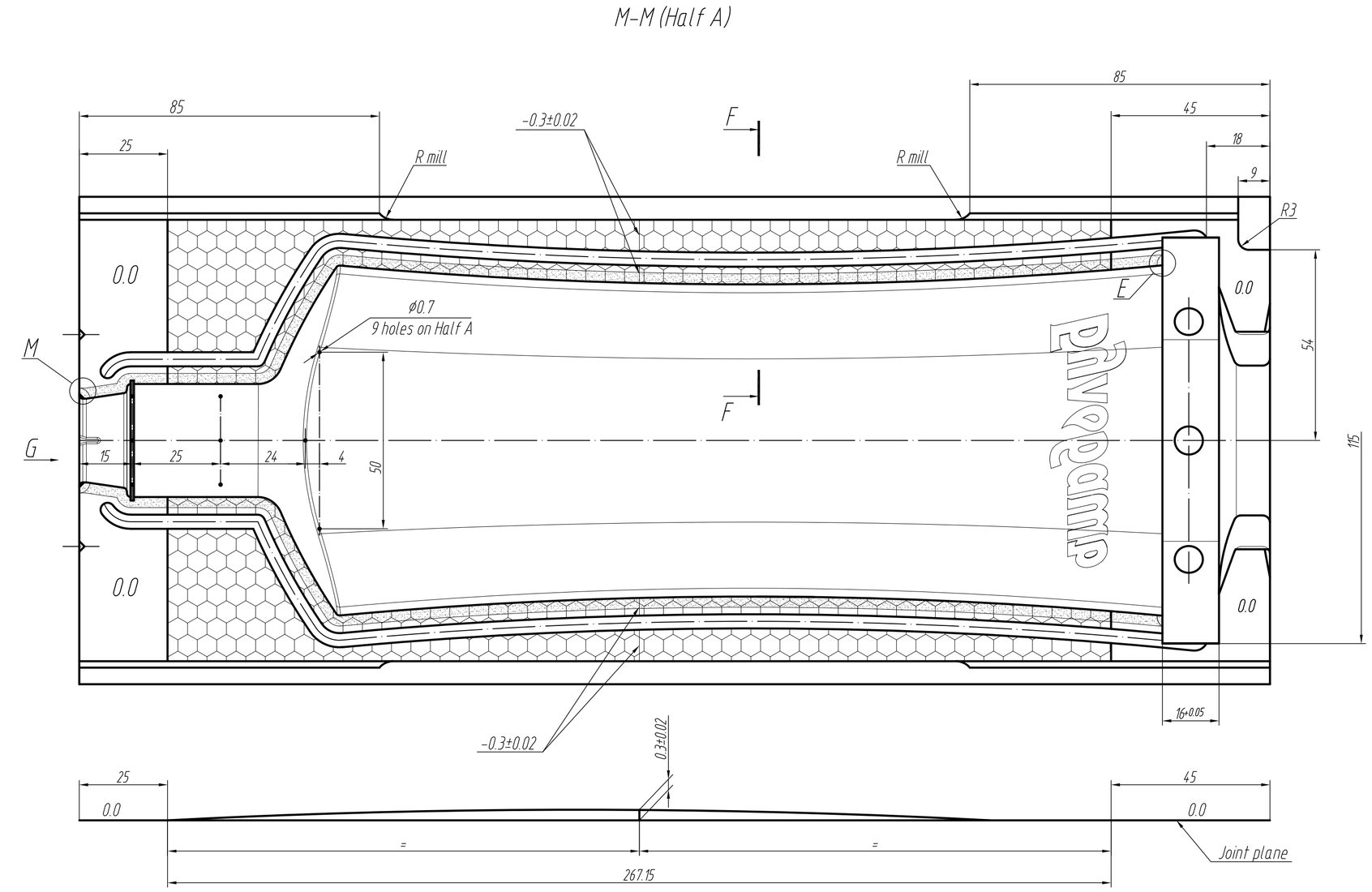

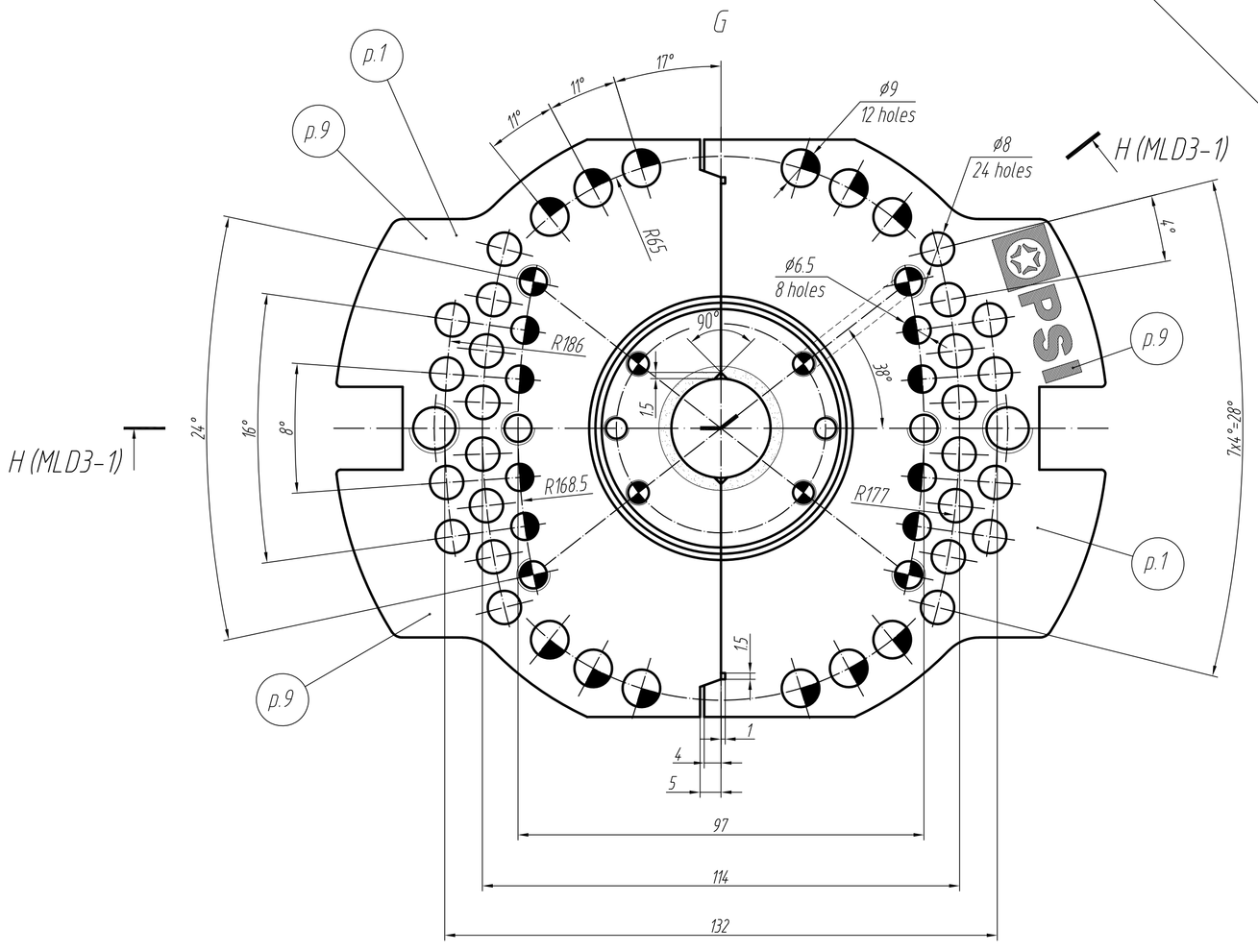

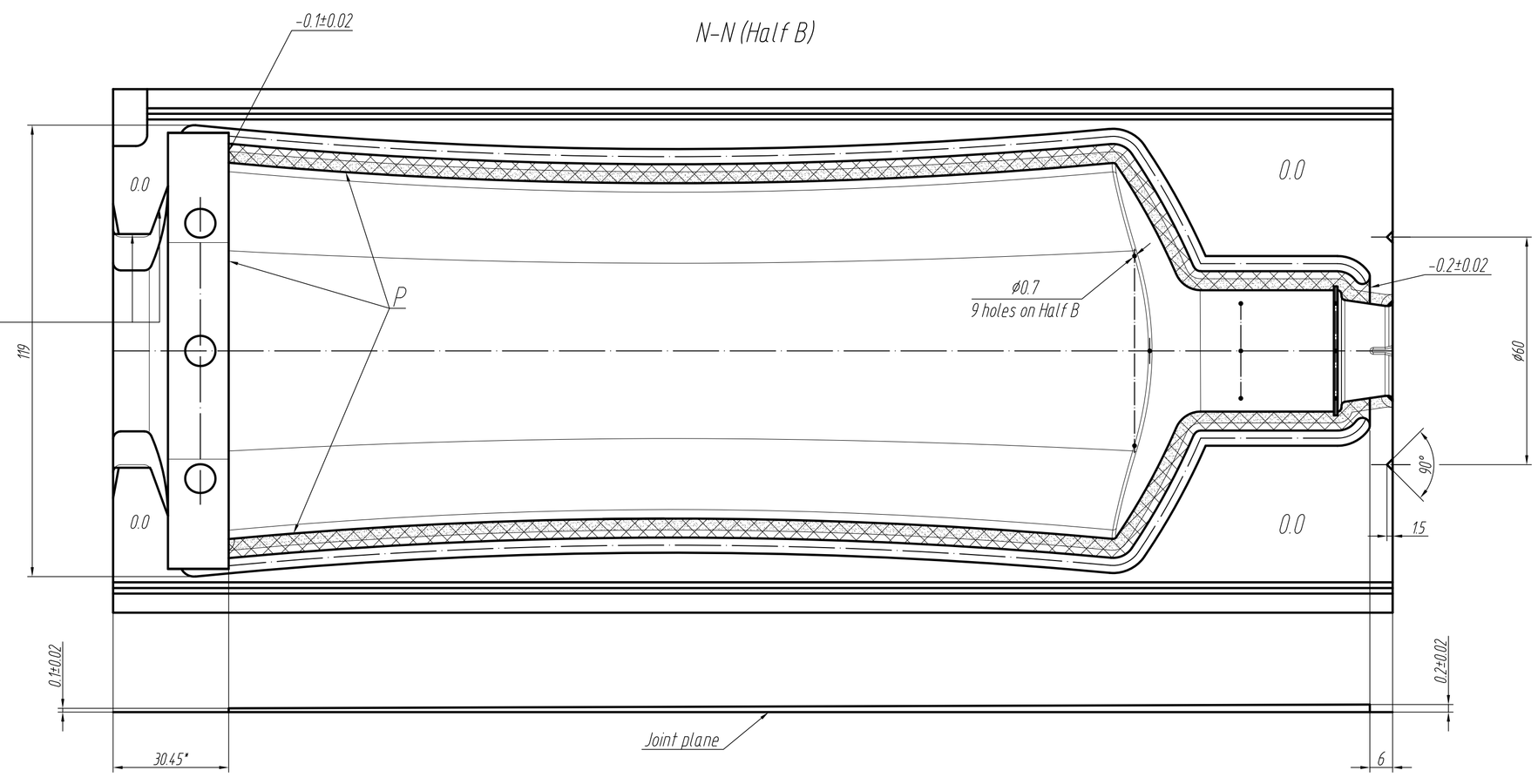

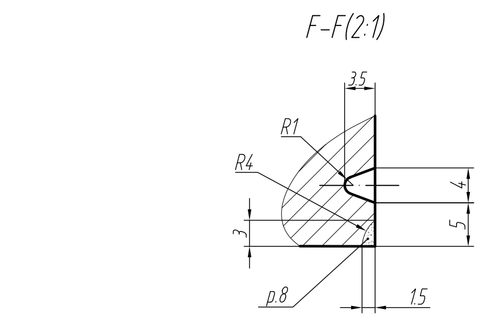

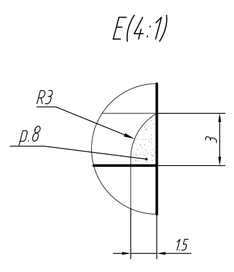

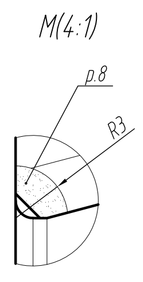

1. Both halves of mould (A & B) must be marked with same ordinal number and used together.
2. Gap in mould joint must be not more than 0.05 mm.
3. Positional tolerance of forming cavity axis T 0.1 mm. Base – joint plane
4. Allowed deviation of forming cavity dimensions is not more than ±0.05 mm. except for dimensions that are specially shown.
5. Keep sharp edges P.
6. *Reference only dimensions
7. H14, h14, ±IT14/2.
8. Hardness after welding HRC≥35..40.
9. Mark: XXI-KPM-26-2-1000-18-ExtraNew
   Mark: 4690/type1
   Mark ordinal number (h=8) & PSI logo.
   Depth of marking-0.2...0.3 mm.
10. Cap holes with screws M8x8 and punch.
11. Cap holes with screws M6x8 and punch.

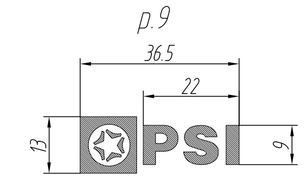

		ASSEMBLY NUMBER/ НОМЕР СБОРКИ: 53	MATERIAL/ МАТЕРИАЛ: CAST IRON (GS900)	MACHINE/ МАШИНА: EMHART GLASS-BB-DG5 1/2"-8	JOB TITLE/НАЗВАНИЕ РАБОТЫ: XXI-KPM-26-2-1000-18-ExtraNew (trial)	SCALE/ МАСШТАБ: 1:1
		INVERT CENTRE/ ИНВЕРТ: 120	WELDING/ НАПЛАВКА: All edges (HRC 35...40)	DESIGNER/ ДИЗАЙНЕР:		
25.11.19	1	"H" DIMENSION/ РАЗМЕР "H": (РАССТОЯНИЕ ОТ ОСИ ФОРМЫ ДО ВЕРХНЕЙ ГИБКИ) 57.15	QUANTITY/ КОЛИЧЕСТВО:	DATE/ ДАТА: 25.11.19	DRAWING NUMBER/НОМЕР ЧЕРТЕЖА: 4690-MLD1-2 (type 1)	
DATE/ДАТА	REVISIONS/ИЗМЕНЕНИЯ					

PSI
Адрес: 199034, Россия, Санкт-Петербург, В.О., 14 линия, д. 7.
Тел: +7(812)3202959
Контакт: info@psiglass.ru