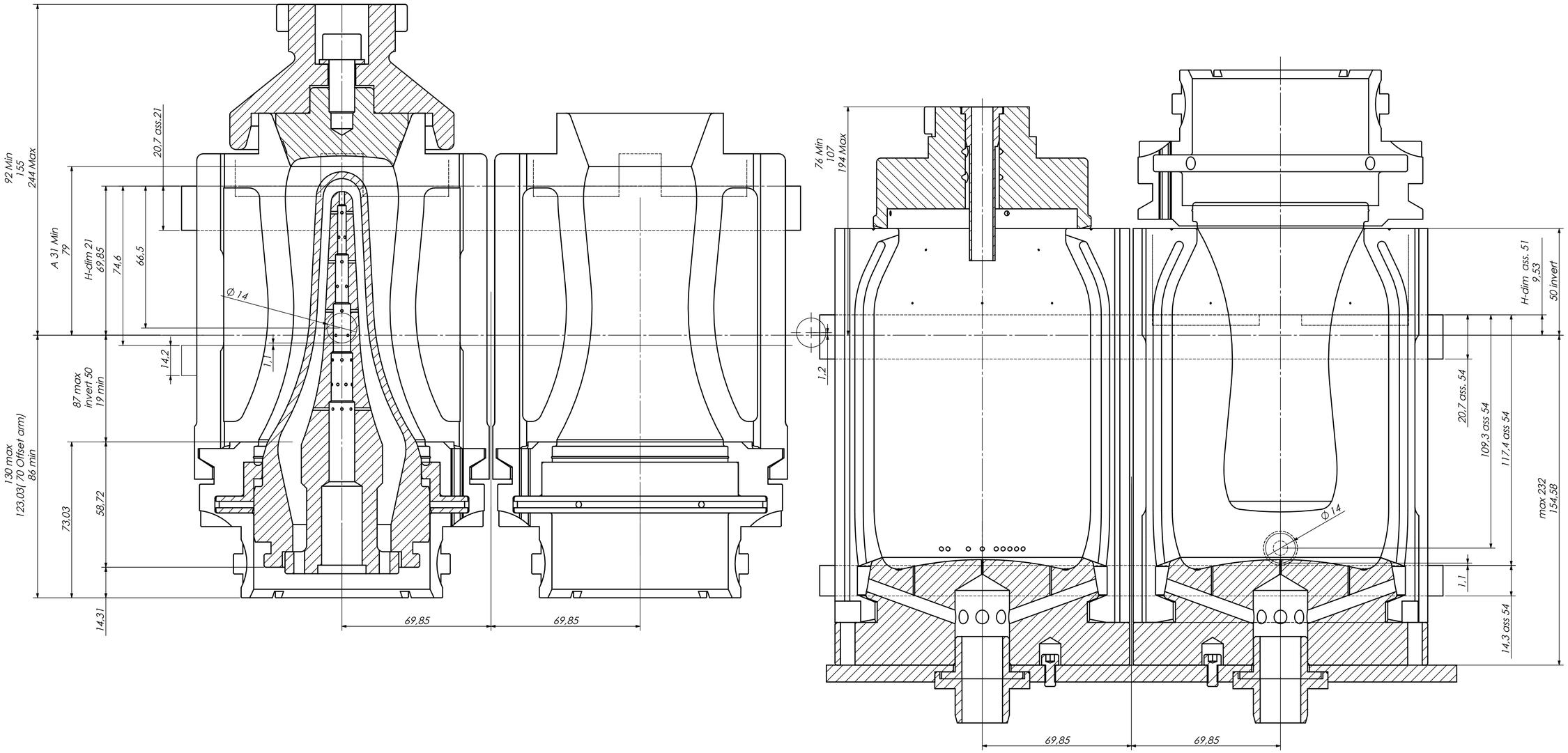

INVERT CENTRE : 50
'H' DIMENSION : 69.85/9.53
ASSEMBLY : 21/54
SCALE : 1:1

BIEBOUW BVBA
INDUSTRIESTRAAT 17
B-8755 Ruiselede

Tel.:+32(0)51 686714
Fax.:+32(0)51 689182
Email: info@biebouw.com

DO NOT SCALE DRAWING
IF IN DOUBT ASK

TOLERANCES UNLESS OTHERWISE SPECIFIED
DIMS: 0.0 ± 0.2 DIMS: 0.00 ± 0.05
REMOVE BURRS & SHARP EDGES IN
ACCORDANCE TO STANDARD PRACTICE

THIRD ANGLE PROJECTION

SURFACE FINISH
CAST: ROUGH FINE: POLISH

JOB NAME	1000ml BANKA JAR		
ITEM	MACHINE SETUP	QUANTITY	
CUSTOMER	Raudkull	REF. NO.	
ORDER NO.	-	DRAWN BY	JBB
MATERIAL		CHECKED BY	
MACHINE	PB DG 5"1/2	DATE	9/04/2014

REVISIONS

DRG No: BIEB511-03