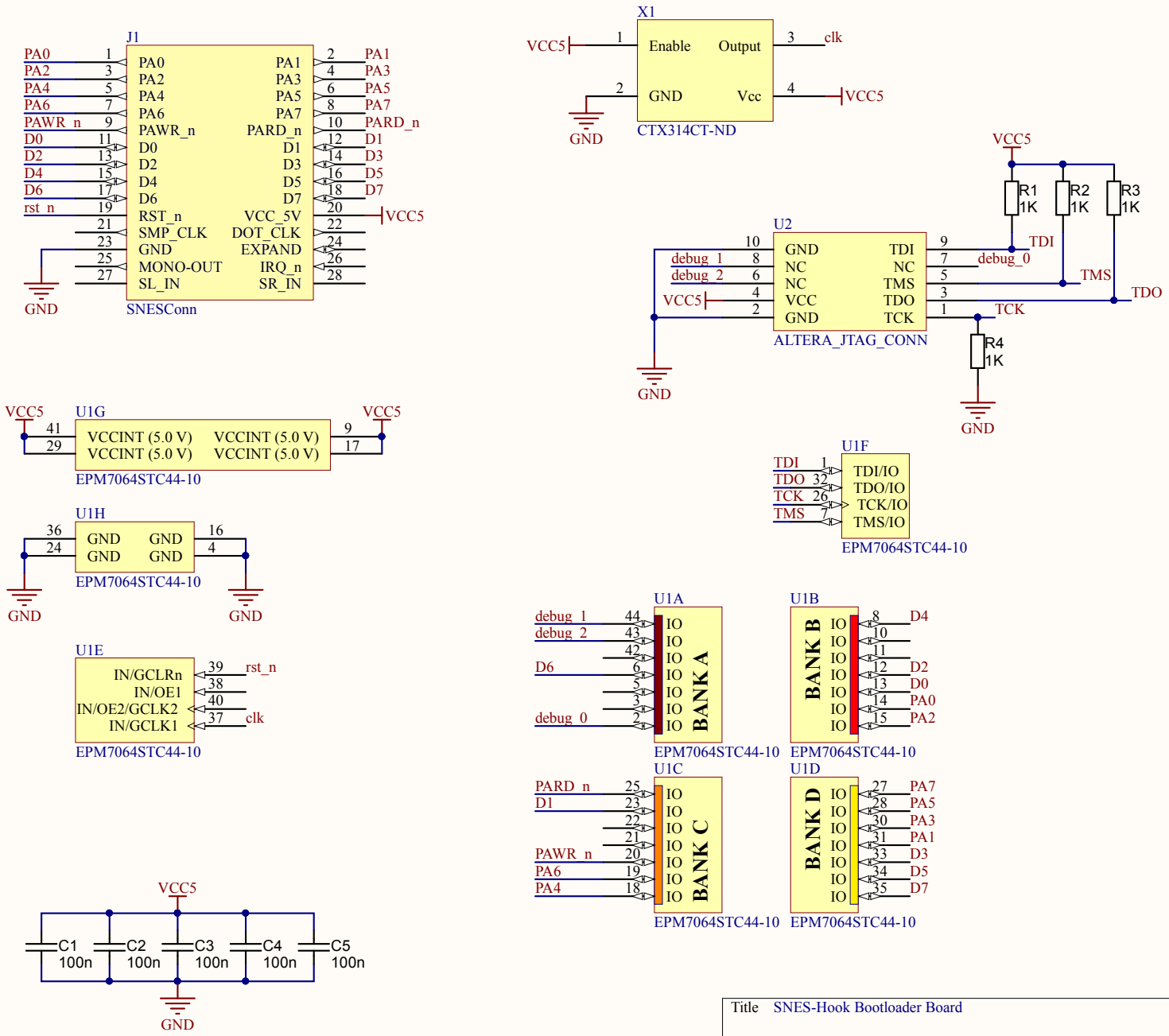
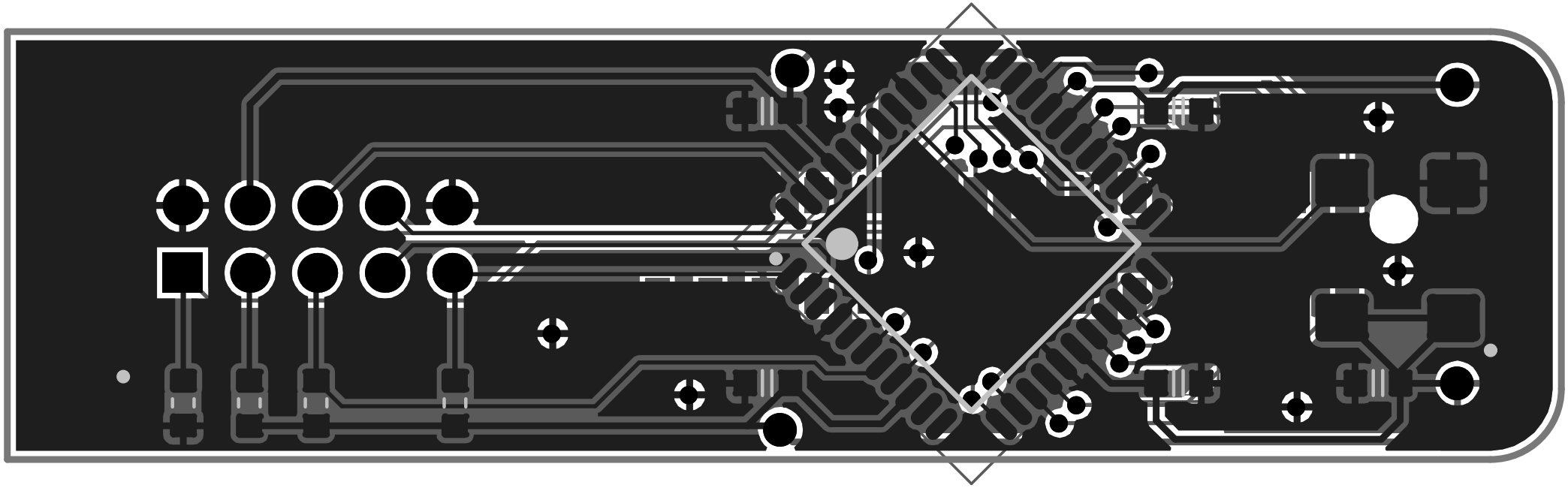
Title	SNES-Hook Bootloader Board	
Size A	Number RNG-0007	Revision A
Date: 8/27/2015		Sheet 1 of 1
File: C:\Users\..\snes_hook.SchDoc		Drawn By: Evan Custodio