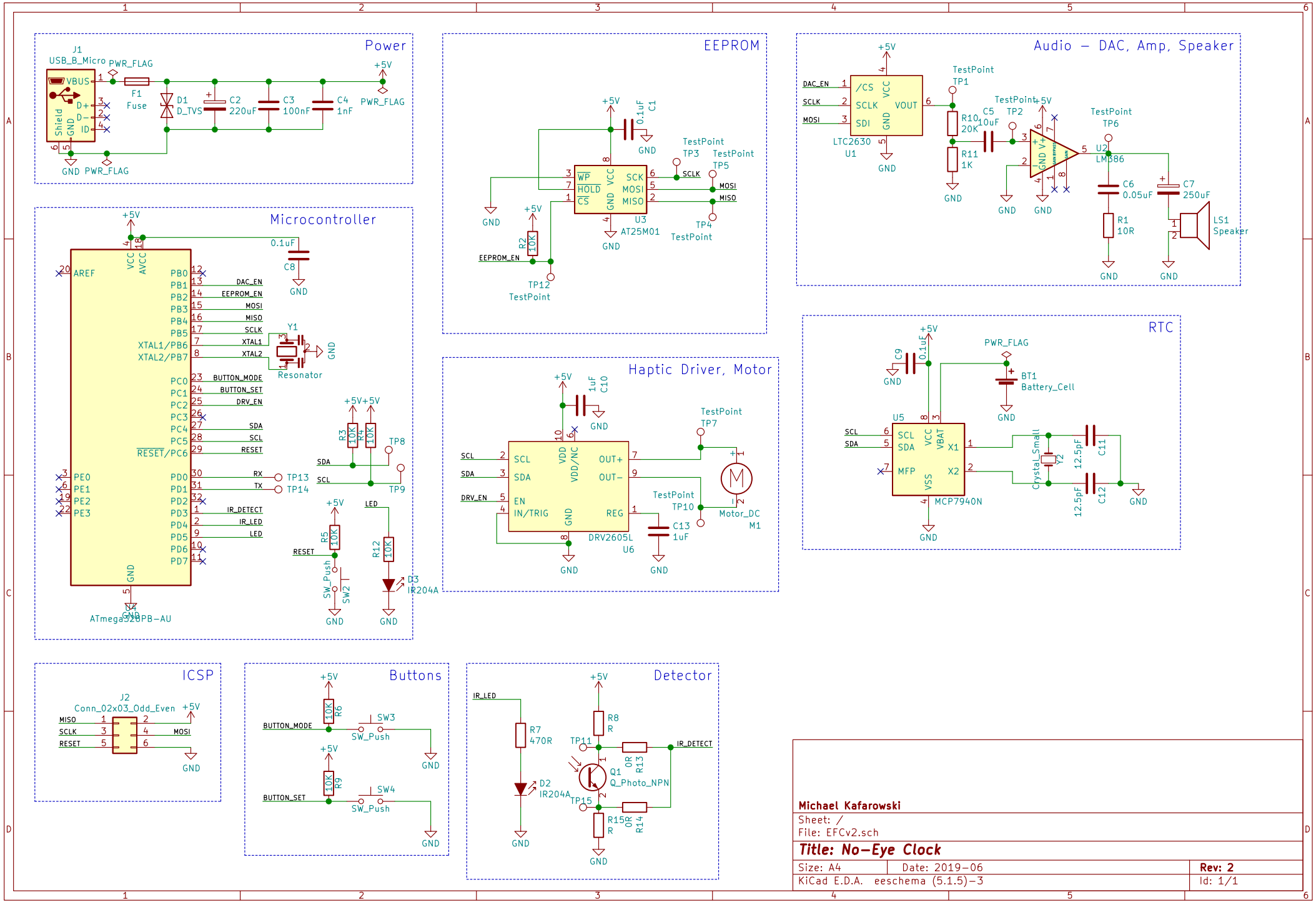


**Michael Kafarowski**

Sheet: /

File: EFCv2.sch

***Title: No-Eye Clock***

| | | |
|---|---|---|
| Size: A4 | Date: 2019-06 | **Rev: 2** |
| KiCad E.D.A. eeschema (5.1.5)-3 | | Id: 1/1 |